SUBJECT: **RFQ FOR DESIGN-BUILD SVCS FOR HORIZONTAL/CIVIL ENGINEERING PROJECTS**

BID # **CDB-0006-16** OPEN DATE: **10/21/2015**

COMPETITIVE SEALED PROPOSAL EVALUATION COMMITTEE

KIND AND BASIS OF CONTRACT:
CONSTRUCTION – DESIGN/BUILD

AGENCY: **DEPARTMENT OF PUBLIC WORKS**

BASIS OF AWARD: **QUALIFICATIONS BASED**

NUMBER OF BIDS INVITED: 5 NUMBER RECEIVED: 5 OTHER: 1

SUMMARY OF BIDS AND RECOMMENDED ACTIONS:

The Phase I Underground Tank Assessments project at various locations was awarded to J.B. Coxwell Contracting, Inc., on 11/30/17 in the amount of $44.434.00.

Recommend approval of Change Order #1 to J. B. Coxwell Contracting, Inc., for Underground Tank Access Cover replacement services at the previously identified park locations, in the amount of $99,940.00. Per the attached Scope and Fee Summary, "Exhibit I-2" for a new guaranteed maximum price of $144,374.00.

Funding for this project to be executed by Amendment 7B for contract # 6533-54 and encumbered by account(s): RPCP32EF5720-069505-PR0597-01- to be executed by formal contract through Office of General Counsel.

Attachments: Recommendation Memo, Exhibit "I-2", Previous Award(s)

BUYER Marilyn Laidler
MARILYN LAIDLER

RESPECTFULLY SUBMITTED
GREGORY PEASE, CHIEF
PROCUREMENT DIVISION

CONCURRENCE BY: **Tom Fallin, P.E., Chief-Engineering & Construction Management Division**

(ALL AWARD ACTIONS SUBJECT TO LAWFULLY APPROPRIATED FUNDS)
ACTION OF CSPEC COMMITTEE ON RECOMMENDATIONS ABOVE

MEMBERS APPROVING_____ MEMBERS DISAPPROVING_____ DATE:_____

_____ _____ OTHER_____

_____ _____

_____ _____

_____ _____

_____ _____

ACTION OF AWARDING AUTHORITY DATE _____

APPROVED_____ DISAPPROVED: _____

OTHER: _____

SIGNATURE OF AUTHENTICATION _____

City of Jacksonville, Florida

Lenny Curry, Mayor

Department of Public Works
Engineering & Construction Management Division
214 N. Hogan Street, 10th Floor
Jacksonville, FL 32202
(904) 255-8762
www.coj.net

ONE CITY. ONE JACKSONVILLE.

December 18, 2017

12/18/17 15:43:46
Procurement Division

TO: Gregory W. Pease
Chief of Procurement

THRU: John P. Pappas, P.E.
Director

FROM: William J. Joyce, PE
Director of Operations

SUBJECT: CDB-0006-16 – Design-Build Services - Horizontal & Civil Engineering – Underground Tank Access Cover AMENDMENT 7B

In accordance with Design/Build CDB-0006-16, Contract 6533-54, the subject project was awarded by Amendment 7A in the amount of $ 44,434.00 for Phase 1 underground tank assessments at various locations. Based on this, the Department of Public Works has completed negotiations to provide Phase 1 underground tank access cover replacement services at the various parks locations previously identified. Negotiations have resulted in the GMP amount of $99,940.00 for replacement services as indicated on the attached Scope & Fee Summary, Exhibit I-2 and allowing for the completion of the work within 60 days from notice to proceed.

Accordingly, this is to recommend that Contract No #6533-54, originally executed May 2, 2016, between the City and J. B. Coxwell Contracting, Inc. for Design-Build Services- Horizontal & Civil Engineering, be amended to incorporate the attached Scope and Fee Summary, Exhibit I-2 for Underground Tank Access Cover replacement services at the previously identified parks locations for the GMP amount of $99,940.00 known as Amendment 7B, thereby increasing the maximum GMP for the project to a new GMP amount of $144,374.00.

To be encumbered as follows:

RPCP32EF5720-069505-PR0597-01	$99,940.00
TOTAL	$99,940.00

TF/lw

Attachment: Exhibit I-2

Exhibit 1-a

J.B. Coxwell Contracting, Inc.
6741 Lloyd Road West
Jacksonville, Florida 32254
Office (904) 786-1120 Fax (904) 783-2970

December 12, 2017

Bill Joyce, P.E.
City of Jacksonville Department of Public Works
Engineering & Construction Management Division
214 N. Hogan Street, 10th Floor
Jacksonville, Florida 32202

Re: Scope of Services & Fee Proposal - Underground Tank Access Cover Replacement (Ph 1)
Design-Build Construction Delivery for City of Jacksonville-RFQ CDB-0006-16
City Contract No. 6533-54

Dear Mr. Joyce:

J.B. Coxwell Contracting, Inc. (JBCCI) is pleased to submit for your review and consideration the following design-build scope of services and lump sum fee proposal for the COJ Parks - Phase 1 underground tank access cover replacement services. The COJ Parks - Phase 1 scope of work in this proposal includes the modification/replacement of 20 (each) underground tank access covers at 15 each COJ Park locations (see attached summary spreadsheet for locations). Based on the information obtained from the initial site visits, we have developed the scope as follows;

Out of the 20 access cover replacements included in this proposal, 16 of these covers will require JBCCI to remove the existing fiberglass access covers from the existing underground tanks (fiberglass lift stations/septic tanks), and install a new special-order aluminum hatch with locking lid (see detail). The new aluminum hatches will be bolted to either the fiberglass or concrete tanks to cover the opening as shown in the detail. The remaining 4 fiberglass/plastic access covers will be removed and replaced with the "Bruce Park" detail previously approved by the COJ.

The proposed total lump sum amount for the COJ Parks - Phase 1 underground access cover replacements, and construction to modify the 20 each access covers is $99,940.00. This lump sum proposal is inclusive of only the services listed and which are anticipated at this time. No services or work other than those noted in this proposal are included. In addition, any unknown condition(s) which may surface during design and construction or any other increase in scope of services may result in a request for additional services. No work will proceed however, without first obtaining approval from the City for any additional services.

The new aluminum hatches required for this project have a 4-5 week lead time, once JBCCI obtains an official notice to proceed, we can submit a purchase order for those new materials. Based on the anticipated material delivery of 4-5 weeks, and the anticipated construction time required with multiple crews, we would expect to complete this project within 60 days after the NTP.

Breakdown for JBCCI's Lump Sum proposal;

◦ JBCCI Labor -	Lump Sum $30,230.00
◦ JBCCI Equipment -	Lump Sum $ 8,790.00
◦ Plumbing Subcontractor (Septic Tanks) -	Lump Sum $ 5,500.00
◦ Temp. Fence Rental -	Lump Sum $ 2,000.00
◦ Permanent & Construction Materials for Modifications - Includes all taxes, and freight charges.	Lump Sum $46,520.00
◦ JBCCI Management and Administration -	Lump Sum $ 3,000.00
◦ Project Contingency Fee -	Lump Sum $ 3,900.00
Total Lump Sum Proposal	$99,940.00

We are again very appreciative of the opportunity to provide you with our design-build services. Should you have any questions or need any further information, please do not hesitate to contact us. We are also available to review and discuss this proposal with you and/or others at your convenience.

Regards,

J.B. Coxwell Contracting, Inc.

Jayson Smith

Jayson Smith,
Design Build Manager

Cc: Christopher C. Blank, VP of Operations (JBCCI)

COJ Park Location	Address	Zip	Inspection Date	Inspector	Number of Tanks	Underground Tank / LS Material	Access Cover Material	Diameter of Lid	Secured by Fence	Fiberglass Lids to be replaced in Phase 1	Notes
Alamacani Park			11/28/2017	Gary Young	3 Tanks	Appears to be Concrete	6 Lids total, 4 plastic, 2 cover, Plugs	24" - 42"	Yes	4 ea - Bauer Hatch Method	Tanks are buried
Baker Skinner Park			11/28/2017	Chris Blank II	1 Lift Station		2 Fiberglass	42" and 3'x3' (Keyhole shape)	Yes	2 ea - Aluminum Locking Hatch	
Beachview Elementary Park			11/27/2017	Jayson Smith	1 Lift Station	Fiberglass	1 Fiberglass	42"	Unsecured	1 ea - Aluminum Locking Hatch	
Burnett Park #1			11/27/2017	Chris Blank II	2 Lift Stations		2 Metal & 1 Plastic/Fiberglass?	Metal not measured, Plastic is 58"	1 Unsecured	1 ea - Aluminum Locking Hatch	1 Lift Station is fiberglass, Exposed with Missing Bolts
Equestrian Center			11/28/2017	Jayson Smith	1 Lift Station	Pre-Cast Concrete LS	Concrete and Aluminum Hatch	3' x 5'	Yes	No Work Required	JEA Lift Station, No Issue
Fairchild Park			11/27/2017	Gary Young	1 Septic Tank	Concrete Slab	Plastic/Fiberglass	58"	Unsecured	1 ea - Aluminum Locking Hatch	
Fine Ring Road Park			11/28/2017	Gary Young	2 Lift Stations & 2 Tanks		1 ea Steel B&C 24", and 2 ea Alum	24" and 30"	Unsecured	1 ea - Aluminum Locking Hatch	2 tanks and 2 Lift Stations
Lake Lucina Elementary Park			11/27/2017	Chris Blank II	1 Lift Station & 1 Grease Trap		1 Fiberglass & 2 Metal	36 both fiberglass, & 2 24" B&C Steel	Yes	1 ea - Aluminum Locking Hatch	
Lem Blackwell Park #1			11/27/2017	Jayson Smith	1 Lift Station	Fiberglass	1 Fiberglass	42"	Yes	1 ea - Aluminum Locking Hatch	Hard to access with equipment
Lorine F. Miller Park #1			11/27/2017	Gary Young	1 Lift Station		1 Fiberglass	42"	Yes	1 ea - Aluminum Locking Hatch	Lid is bolted down with 2 stainless steel bolts
Lorine F. Miller Park #2			11/27/2017	Gary Young	1 Lift Station		1 Fiberglass	48"	Yes	1 ea - Aluminum Locking Hatch	Lock Number 2357
Mandalay Park #1			11/28/2017	Jayson Smith	1 Lift Station, 1 Septic Tank	2 Fiberglass and 1 Concrete	1 Fiberglass and 1 Steel	42 in and 24 in	Unsecured	1 ea - Aluminum Locking Hatch	
Murray Hill Playground			11/28/2017	Jayson Smith	1 Lift Station	Fiberglass	1 Fiberglass	42 in w/ Bolts	Yes	1 ea - Aluminum Locking Hatch	Maintained Small Lift Station, Decent Condition
Oceanway Park			11/27/2017	Gary Young	1 Lift, 2 Septic Tanks (Fiberglass)	Concrete and fiberglass	1 Fiberglass (5 lid, 2 steel B&C, 2 concrete plugs	4' 4" plastic, 24" B&C sets	Yes	1 ea - Aluminum Locking Hatch	Site had 5 or 6 structures which could have sewer services, Saw 3 or 4 sanitary lids around facility, Has 35' by 25' elevated drainfield ~ 6 blocks high
Ringhaver Park #1			11/28/2017	Chris Blank II	2 Lift Stations		1 Metal & 1 Fiberglass	metal is 4x4' hatch, 24" plastic lid	Yes	1 ea - Aluminum Locking Hatch	Yes
Watery Park			11/27/2017	Chris Blank II	1 Lift Station & 1 Clean out		1 Fiberglass	~4.5' x 4'	1 Unsecured	2 ea - Aluminum Locking Hatch	1 Unsecured

SERIES C1R ACCESS DOOR

STANDARD FEATURES:

- AUTO-LOCK T-316 STAINLESS STEEL HOLD OPEN ARM WITH RELEASE HANDLE
- T-316 STAINLESS STEEL HINGES AND ATTACHING HARDWARE
- NON-CORROSIVE PADLOCK LOCKING BAR
- VENT COUPLING ON REQUEST
- LARGER SIZES AVAILABLE FOR CONCRETE APPLICATIONS
- SINGLE LEAF CONSTRUCTION
- 300 LBS. PER SQ. FT. LOAD RATING (1464 KG. PER SQ. METER LOAD RATING)
- RECESSED HANDLE
- LIFETIME GUARANTEE

STANDARD SIZES

QTY.	MODEL NO.	A DIM. INCHES (MM)	B DIM. INCHES (MM)	C DIM. INCHES (MM)	D DIM. INCHES (MM)	UNIT WT. LBS. (KG.)
	C1R40	40 (1016)	36 (914)			45 (20)
	C1R52	52 (1320)	48 (1219)			80 (36)
	C1R64	64 (1626)	60 (1524)			125 (57)
	C1R76	76 (1930)	72 (1829)			180 (82)

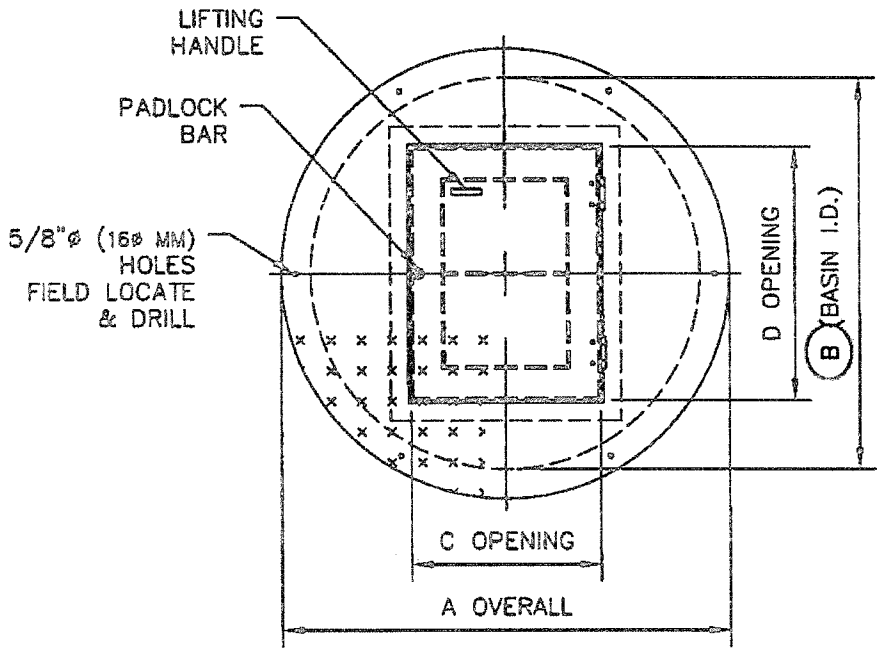

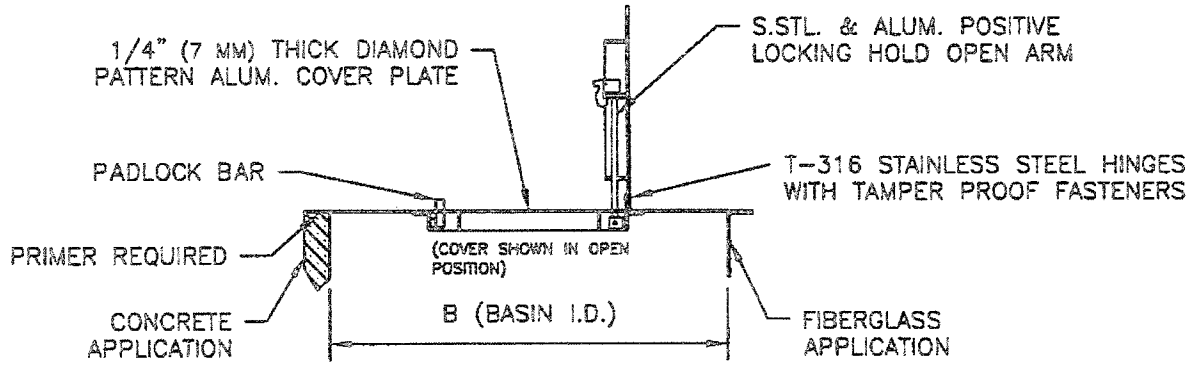

SECTION

City of Jacksonville
Public Works
Public Buildings
Bruce Park Septic Tank Covers
Furnish and Install Cast Iron Covers

SCOPE OF WORK:

Furnish 2 ea Cast Iron Rims with concrete risers as needed:

- Specification for Rim assembly below as edited and manufactured as V-2326 Assembly by East Jordan Iron Works.
- Concrete risers per specification below as manufactured by AA Precast Products.
- Top of rims shall be flush with surrounding lawn upon completion.
- Butyl sealant rope shall be used between all risers, concrete tank top and Rim assembly, see sample product below.
- Work shall be performed in one day, work site secured at all times and provide temporary fence before, during up to completion of operations.

V-2326 ASSEMBLY

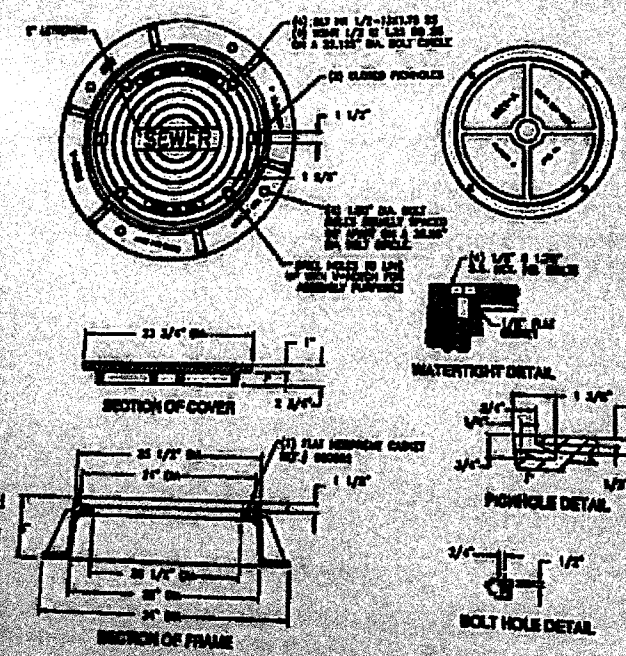

Provide 3/4" butyl sealing rope between rim frame and concrete riser, between risers and riser to tank cover.

PRODUCT NUMBER

DESIGN FEATURES

MATERIALS

COVER-GRAY IRON ASTM A48 CL30B

FRAME-GRAY IRON ASTM A48 CL30B

HEAVY DUTY

COATING UNCOATED

REFERENCE INFORMATION

DRAWING DETAILS

SUBJECT: **RFQ FOR DESIGN-BUILD SVCS FOR HORIZONTAL/CIVIL ENGINEERING PROJECTS**

BID # **CDB-0006-16** OPEN DATE: **10/21/2015**

COMPETITIVE SEALED PROPOSAL EVALUATION COMMITTEE

KIND AND BASIS OF CONTRACT:
CONSTRUCTION – DESIGN/BUILD

AGENCY: **DEPARTMENT OF PUBLIC WORKS**

BASIS OF AWARD: **QUALIFICATIONS BASED**

NUMBER OF BIDS INVITED: 5 NUMBER RECEIVED: 5 OTHER: 1

SUMMARY OF BIDS AND RECOMMENDED ACTIONS:

The Department of Public Works has completed negotiations with J.B. Coxwell Contracting, Inc., for Underground Tank Access Cover in accordance with subject bid.

Recommend approval of award to J. B. Coxwell Contracting, Inc., to provide initial assessments for access covers for 25 locations and prepare a cost estimate to retrofit each site with new access covers. Guaranteed Maximum Price in the amount of ~~$49,194.00~~, $44,434.00 per "Exhibit I1" and allowing for the completion of work within 30 days from notice to proceed.

Funding for this project to be executed by Amendment 7A for contract # 6533-54 and encumbered by account(s): RPCP32EF5720-069505-PR0597-01- $33,451.92; PWPB5A1MAPR-03410- $15,742.08- to be executed by formal contract through Office of General Counsel.

Attachments: Recommendation Memo, Exhibit "I1", Previous Award

BUYER _____ MARILYN LADLER

RESPECTFULLY SUBMITTED _____ GREGORY PEASE, CHIEF PROCUREMENT DIVISION

CONCURRENCE BY: **Tom Fallin, P.E., Chief-Engineering & Construction Management Division**

(ALL AWARD ACTIONS SUBJECT TO LAWFULLY APPROPRIATED FUNDS)
ACTION OF CSPEC COMMITTEE ON RECOMMENDATIONS ABOVE

MEMBERS APPROVING 5 MEMBERS DISAPPROVING Ø DATE: 11/30/17

OTHER _____

ACTION OF AWARDING AUTHORITY DATE 11/30/17

APPROVED _____ DISAPPROVED: _____

OTHER: _____

SIGNATURE OF AUTHENTICATION _____

Sam E. Mousa
Chief Administrative Officer
For: Mayor Lenny Curry
Under Authority of:
Executive Order No. 2015-05

SUBJECT: RFQ- FOR DESIGN- BUILD SERVICES OF HORIZONTAL/CIVIL ENGINEERING PROJECTS

BID # CDB-0006-16 OPEN DATE: 10/21/2015

COMPETITIVE SEALED PROPOSAL EVALUATION COMMITTEE

KIND AND BASIS OF CONTRACT:
CONSTRUCTION – DESIGN/BUILD

AGENCY: DEPARTMENT OF PUBLIC WORKS

BASIS OF AWARD: EVALUATION CRITERIA

NUMBER OF BIDS INVITED: 5 NUMBER RECEIVED: 5 OTHER: 1

SUMMARY OF BIDS AND RECOMMENDED ACTIONS:
The City had previously issued this RFP, and the evaluation committee has evaluated proposals. Subsequently, presentations were conducted and evaluated on January 28, 2016. Based upon the combination of proposal and presentation evaluations, scores and rankings are as follows (Listed in alphabetical order):

2) Archer-Western – 118.25
3) Callaway Contracting, Inc. - 100
1) J.B. Coxwell Contracting, Inc. - 121.5

Recommend approval of award to J.B. Coxwell Contracting, Inc., as receiving the highest score in accordance with the evaluation and ranking above. Period of Service will be five (5) years from effective date of contract with funding not-to-exceed $6,000,000.00 annually. To be executed by formal contract through Office of General Counsel.

Attachments: Recommendation Memo, Scoring Matrix, Previous Award

BUYER Marilyn Laidler
MARILYN LAIDLER

RESPECTFULLY SUBMITTED
GREGORY REASE, CHIEF
PROCUREMENT DIVISION

CONCURRENCE BY: Thomas N. Fallin, P.E., Acting Chief-Engineering & Construction Management Division

(ALL AWARD ACTIONS SUBJECT TO LAWFULLY APPROPRIATED FUNDS)
ACTION OF CSPEC COMMITTEE ON RECOMMENDATIONS ABOVE

MEMBERS APPROVING 5 MEMBERS DISAPPROVING _____ DATE: 2/4/16

OTHER _____

ACTION OF AWARDING AUTHORITY DATE 2/04/16

APPROVED ✓ DISAPPROVED: _____

Sam E. Mousa
Chief Administrative Officer
For: Mayor Lenny Curry
Under Authority of
Executive Order No. 2015-03

OTHER: _____

SIGNATURE OF AUTHENTICATION

SUBJECT: RFQ- FOR DESIGN- BUILD SERVICES OF HORIZONTAL/CIVIL ENGINEERING PROJECTS

BID # CDB-0006-16

OPEN DATE: 10/21/2015

COMPETITIVE SEALED PROPOSAL EVALUATION COMMITTEE

KIND AND BASIS OF CONTRACT:
CONSTRUCTION – DESIGN/BUILD

AGENCY: DEPARTMENT OF PUBLIC WORKS

BASIS OF AWARD: EVALUATION CRITERIA

NUMBER OF BIDS INVITED: 5 NUMBER RECEIVED: 5 OTHER: 1

SUMMARY OF BIDS AND RECOMMENDED ACTIONS:
The City had previously issued this RFP, and the evaluation committee has evaluated proposals. Based upon the proposal evaluation, the average scores and rankings are as follows (Listed in alphabetical order):

2) Archer-Western Contractors, LLC. – 91
1) J.B. Coxwell Contracting- 92
3) Callaway Contracting- 74

Pursuant to Section 2.6 – Award of Contract of the RFP, recommend approval to conduct formal interviews with each of the three-top ranked Firms.

Attachments: Recommendation Memo, Scoring Matrix, Bid Tabulation, Section 2.6, JSEB Letter

BUYER Marilyn Laidler
MARILYN LAIDLER

RESPECTFULLY SUBMITTED
GREGORY PEASE, CHIEF
PROCUREMENT DIVISION

CONCURRENCE BY: William J. Joyce, P.E., Chief-Engineering & Construction Management

(ALL AWARD ACTIONS SUBJECT TO LAWFULLY APPROPRIATED FUNDS)
ACTION OF CSPEC COMMITTEE ON RECOMMENDATIONS ABOVE

MEMBERS APPROVING 5 MEMBERS DISAPPROVING _____ DATE: 12-30-15

OTHER _____

ACTION OF AWARDING AUTHORITY DATE 1/01/16

APPROVED ✓ DISAPPROVED: _____

OTHER: _____

Sam E. Mousa
Chief Administrative Officer
For: Mayor Lenny Curry
Under Authority of:
Executive Order No. 2015-05

SIGNATURE OF AUTHENTICATION

QWS3270X 12/18/2017 4:07 PM
FAML6350 V5.1 ** NW COJ FAMIS PRODUCTION ** 12/18/2017
LINK TO: ACCOUNT SUMMARY INQUIRY 4:07 PM

FISCAL MO/YEAR : 03 2018 CURRENCY CODE :
INDEX CODE : RPCP32EF5720 PARKS/REC/ENTER CAPITAL PROJECTS (F5720)
SUBOBJECT : 069505 DM-OTHER CONSTRUCTION COSTS
PROJECT : PR0597 COUNTYWIDE PARKS
PROJECT DETAIL : 01 COUNTYWIDE PARKS-UPGRADES/MAINT REPAIRS
GRANT :
GRANT DETAIL :
USER CODE :

S	DEC 2017	ANNUAL BALANCE	ALL YEARS BALANCE
ESTIMATED REVENUES	.00	.00	.00
REVENUES	.00	.00	.00
UNREALIZED REVENUES	.00	.00	.00
BUDGET	.00	2,000,000.00	2,242,341.00
EXPENDITURES	96,003.00	35,392.58	122,288.89
ENCUMBRANCES	46,942.05	70,906.57	266,401.57
PRE-ENCUMBRANCES	-46,393.65	33,268.15	70,768.15
REMAINING BALANCE	-96,551.40	1,860,432.70	1,782,882.39

F1-HELP F2-SELECT F4-PRIOR F5-NEXT
F9-LINK F10-PRIOR-MO F11-NEXT-MO
G005 - PRIOR RECORD DISPLAYED