SUBJECT: **RFQ FOR DESIGN-BUILD SVCS FOR HORIZONTAL/CIVIL ENGINEERING PROJECTS**

BID # **CDB-0006-16** OPEN DATE: **10/21/2015**

COMPETITIVE SEALED PROPOSAL EVALUATION COMMITTEE

KIND AND BASIS OF CONTRACT:
CONSTRUCTION – DESIGN/BUILD

AGENCY: **DEPARTMENT OF PUBLIC WORKS**

BASIS OF AWARD: **QUALIFICATIONS BASED**

NUMBER OF BIDS INVITED: 5 NUMBER RECEIVED: 5 OTHER: 1

SUMMARY OF BIDS AND RECOMMENDED ACTIONS:

The Phase I Underground Tank Assessments project at various locations was awarded to J.B. Coxwell Contracting, Inc., on 11/30/17 in the amount of $44.434.00; Change Order #1 pending approval in the amount of $99,940.00.

Recommend approval of Change Order #2 to J. B. Coxwell Contracting, Inc., for Underground Tank Access Cover replacement services at the previously identified public buildings locations, in the amount of $60,330.00. Per the attached Scope and Fee Summary, "Exhibit I-3" for a new guaranteed maximum price of $204,704.00.

Funding for this project to be executed by Amendment 7C for contract # 6533-54 and encumbered by account(s): PWPB5A1MAPR-03410- to be executed by formal contract through Office of General Counsel.

Attachments: Recommendation Memo, Exhibit "I-3", Previous Award(s)

BUYER Marilyn Laidler
MARILYN LAIDLER

RESPECTFULLY SUBMITTED
GREGORY PEASE, CHIEF
PROCUREMENT DIVISION

CONCURRENCE BY: **Tom Fallin, P.E., Chief-Engineering & Construction Management Division**

(ALL AWARD ACTIONS SUBJECT TO LAWFULLY APPROPRIATED FUNDS)
ACTION OF CSPEC COMMITTEE ON RECOMMENDATIONS ABOVE

MEMBERS APPROVING_____ MEMBERS DISAPPROVING_____ DATE:_____

_____ _____ OTHER_____

_____ _____

_____ _____

_____ _____

_____ _____

ACTION OF AWARDING AUTHORITY DATE _____

APPROVED_____ DISAPPROVED: _____

OTHER: _____

SIGNATURE OF AUTHENTICATION _____

City of Jacksonville, Florida

Lenny Curry, Mayor

Department of Public Works
Engineering & Construction Management Division
214 N. Hogan Street, 10th Floor
Jacksonville, FL 32202
(904) 255-8762
www.coj.net

ONE CITY. ONE JACKSONVILLE.

December 18, 2017

12/18/17 15:43:43
Procurement Division

TO: Gregory W. Pease
Chief of Procurement

THRU: John P. Pappas, P.E.
Director

FROM: William J. Joyce, PE
Director of Operations

SUBJECT: CDB-0006-16 – Design-Build Services - Horizontal & Civil Engineering – Underground Tank Access Cover AMENDMENT 7C

In accordance with Design/Build CDB-0006-16, Contract 6533-54, the subject project was awarded by Amendment 7A in the amount of $ 44,434.00 for Phase 1 underground tank assessments at various locations. Amendment 7B provided Phase 1 underground tank access cover replacement services at the previously identified parks locations in the amount of $99,940. Amendment 7C will be to provide Phase 1 underground tank assessments at the previously identified public buildings locations. Based on this, the Department of Public Works has completed negotiations which have resulted in the GMP amount of $60,330.00 for replacement services as indicated on the attached Scope & Fee Summary, Exhibit I-3 and allowing for the completion of the work within 60 days from notice to proceed.

Accordingly, this is to recommend that Contract No #6533-54, originally executed May 2, 2016, between the City and J. B. Coxwell Contracting, Inc. for Design-Build Services- Horizontal & Civil Engineering, be amended to incorporate the attached Scope and Fee Summary, Exhibit I-3 for Underground Tank Access Cover Replacement Services at the previously identified public buildings locations for the GMP amount of $60,330.00 known as Amendment 7C and thereby increasing the maximum GMP for the project to a new GMP amount of $204,704.00.

To be encumbered as follows:

PWPB5A1MAPR-03410	$60,330.00
TOTAL	$60,330.00

TF/lw

Attachment: Exhibit I-3

Exhibit 1-3

J.B. Coxwell Contracting, Inc.
6741 Lloyd Road West
Jacksonville, Florida 32254
Office (904) 786-1120 Fax (904) 783-2970

December 12, 2017

Bill Joyce, P.E.
City of Jacksonville Department of Public Works
Engineering & Construction Management Division
214 N. Hogan Street, 10th Floor
Jacksonville, Florida 32202

Re: Scope of Services & Fee Proposal - Underground Tank Access Cover Replacement (Ph 1)
Design-Build Construction Delivery for City of Jacksonville-RFQ CDB-0006-16
City Contract No. 6533-54

Dear Mr. Joyce:

J.B. Coxwell Contracting, Inc. (JBCCI) is pleased to submit for your review and consideration the following design-build scope of services and lump sum fee proposal for the COJ Building Services - Phase 1 underground tank access cover replacement services. The COJ Building Services - Phase 1 scope of work in this proposal includes the modification/replacement of 8 (each) underground tank access covers at 8 each COJ Building Services locations (see attached summary spreadsheet for locations). Based on the information obtained from the initial site visits, we have developed the scope as follows;

To replace the access covers in this proposal, JBCCI will remove the existing fiberglass access covers from the existing underground tanks (fiberglass lift stations/septic tanks), and install a new special-order aluminum hatch with locking lid (see detail). The new aluminum hatches will be bolted to either the fiberglass or concrete tanks to cover the opening as shown in the detail.

The proposed total lump sum amount for the COJ Building Services - Phase 1 underground access cover replacements, and construction to modify the 8 each access covers is $60,330.00. This lump sum proposal is inclusive of only the services listed and which are anticipated at this time. No services or work other than those noted in this proposal are included. In addition, any unknown condition(s) which may surface during design and construction or any other increase in scope of services may result in a request for additional services. No work will proceed however, without first obtaining approval from the City for any additional services.

The new aluminum hatches required for this project have a 4-5 week lead time, once JBCCI obtains an official notice to proceed, we can submit a purchase order for those new materials. Based on the anticipated material delivery of 4-5 weeks, and the anticipated construction time required with multiple crews, we would expect to complete this project within 60 days after the NTP.

Breakdown for JBCCI's Lump Sum proposal;

• JBCCI Labor -	Lump Sum $14,430.00
◦ JBCCI Equipment -	Lump Sum $ 6,400.00
• Plumbing Subcontractor (Septic Tanks) -	Lump Sum $ 5,500.00
• Temp. Fence Rental -	Lump Sum $ 2,000.00
◦ Permanent & Construction Materials for Modifications - Includes all taxes, and freight charges.	Lump Sum $24,000.00
◦ JBCCI Management and Administration -	Lump Sum $ 3,000.00
◦ Project Contingency Fee -	Lump Sum $ 5,000.00
Total Lump Sum Proposal	$60,330.00

We are again very appreciative of the opportunity to provide you with our design-build services. Should you have any questions or need any further information, please do not hesitate to contact us. We are also available to review and discuss this proposal with you and/or others at your convenience.

Regards,

J.B. Coxwell Contracting, Inc.

Jayson Smith

Jayson Smith,
Design Build Manager

Cc: Christopher C. Blank, VP of Operations (JBCCI)

Building Facility Location Name	Address	Zip	Inspection Date	Inspector	Number of Tanks	Underground Tank / LS Material	Access Cover Material	Diameter of Lid	Secured by Frame	Fiberglass Lids to be replaced in Phase 1	NOTES
COJ # 19- Fire Station #51	10014 Old St Augustine Rd	32257	11/30/2017	Chris Blank B	1 Lift Station	Appears to be Fiberglass	Fiberglass & Metal	42" & 24"x24"	No	1 ea Aluminum Locking Hatch	In front of fire station
COJ # 26- 1903 Ninth Squad Warehouse	7431 Wilson Blvd	32210	11/29/2017	Gary Young	1 Lift Station	Appears to be concrete	Fiberglass & Metal	42" & 32"x48"	No	1 ea Aluminum Locking Hatch	
COJ # 39- Old Animal Control And Protective	2580 1st Street W	32254	11/29/2017	Gary Young	1 Lift Stations	Concrete/ Plastic	Aluminum & Plastic	Square 2'X2 5' and 4'X4', ~30-40" plastic	No on metal lids, yes for plastic	1 ea Aluminum Locking Hatch	Electric pumps with tanks. Fairly easy to access.
COJ # 43- Special Events Outer Storage Bu	7433 Wilson Blvd	32210	11/29/2017	Gary Young	1 Tank	Unknown	Plastic or Fiberglass	24"	Yes	1 ea Aluminum Locking Hatch	Could not confirm type of tank - water?
COJ # 45- Butcher Hunting And Food	611 Adams St E	32202	11/29/2017	Gary Young	2 Lift/Pump Station	Unknown	Metal & HDPE	No. 1 32"X36" Rec. / 17"x29" Rec/ No. 2 33"X37" to 30 round(plastic)	Yes	1 ea Aluminum Locking Hatch	1 potential oil/ H2O seperator, numerous cleaners 4-8" dia. Fairly easy to access
COJ # 47- Sulzbacher President And E&O Tr	611 Adams St E	32202	11/29/2017	Gary Young	1 Tank	Concrete	Plastic	30" - 32"?	Yes	1 ea Aluminum Locking Hatch	No above grade lids, appears to be subsurface. Difficult to access
COJ # 48- Tatnall Support A	355 Edna Rd S	32254	11/29/2017	Gary Young	1 Lift Station	Fiberglass/Concrete ?	Fiberglass	42	No	1 ea Aluminum Locking Hatch	Fairly easy to access.
COJ # 50- Traffic Engineering	1007 Superior St	32254	11/29/2017	Gary Young	1 Lift Station	Unknown	Fiberglass	54"	Yes	1 ea Aluminum Locking Hatch	Nothing holding lid in place but weight. Fairly easy to access.

SERIES C1R ACCESS DOOR

STANDARD FEATURES:

- AUTO–LOCK T–316 STAINLESS STEEL HOLD OPEN ARM WITH RELEASE HANDLE
- T–316 STAINLESS STEEL HINGES AND ATTACHING HARDWARE
- NON–CORROSIVE PADLOCK LOCKING BAR
- VENT COUPLING ON REQUEST
- LARGER SIZES AVAILABLE FOR CONCRETE APPLICATIONS
- SINGLE LEAF CONSTRUCTION
- 300 LBS. PER SQ. FT. LOAD RATING (1464 KG. PER SQ. METER LOAD RATING)
- RECESSED HANDLE
- LIFETIME GUARANTEE

STANDARD SIZES

QTY.	MODEL NO.	A DIM. INCHES (MM)	B DIM. INCHES (MM)	C DIM. INCHES (MM)	D DIM. INCHES (MM)	UNIT WT. LBS. (KG.)
	C1R40	40 (1016)	36 (914)			45 (20)
	C1R52	52 (1320)	48 (1219)			80 (36)
	C1R64	64 (1626)	60 (1524)			125 (57)
	C1R76	76 (1930)	72 (1829)			180 (82)

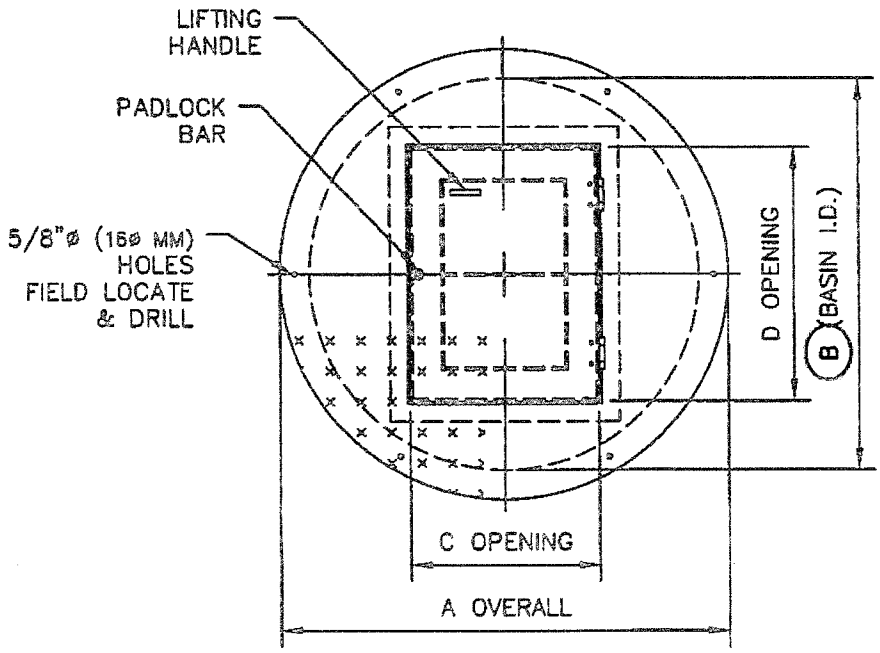

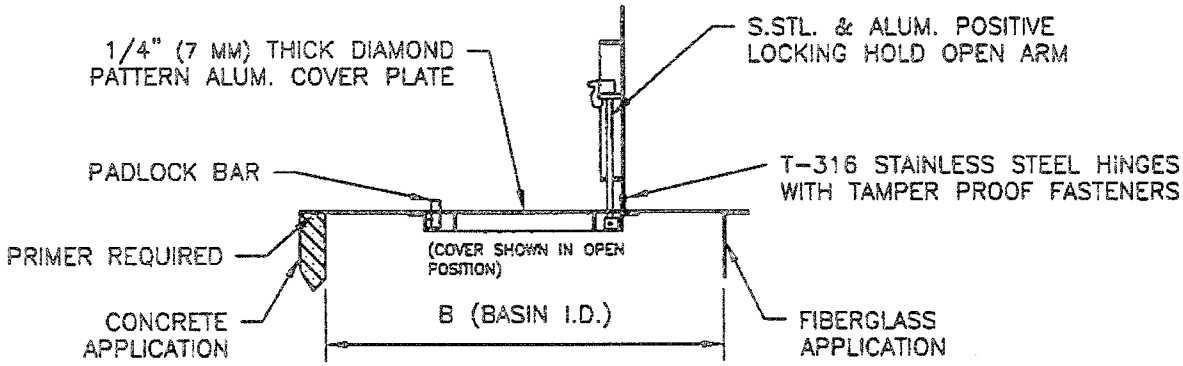

SECTION

SUBJECT: RFQ FOR DESIGN-BUILD SVCS FOR HORIZONTAL/CIVIL ENGINEERING PROJECTS

BID # **CDB-0006-16** OPEN DATE: **10/21/2015**

COMPETITIVE SEALED PROPOSAL EVALUATION COMMITTEE

KIND AND BASIS OF CONTRACT:
CONSTRUCTION – DESIGN/BUILD

AGENCY: **DEPARTMENT OF PUBLIC WORKS**

BASIS OF AWARD: **QUALIFICATIONS BASED**

NUMBER OF BIDS INVITED: 5 NUMBER RECEIVED: 5 OTHER: 1

SUMMARY OF BIDS AND RECOMMENDED ACTIONS:
The Department of Public Works has completed negotiations with J.B. Coxwell Contracting, Inc., for Underground Tank Access Cover in accordance with subject bid.

Recommend approval of award to J. B. Coxwell Contracting, Inc., to provide initial assessments for access covers for 25 locations and prepare a cost estimate to retrofit each site with new access covers. Guaranteed Maximum Price in the amount of ~~$49,194.00~~, $44,434.00 per "Exhibit I1" and allowing for the completion of work within 30 days from notice to proceed.

Funding for this project to be executed by Amendment 7A for contract # 6533-54 and encumbered by account(s): RPCP32EF5720-069505-PR0597-01- $33,451.92; PWPB5A1MAPR-03410- $15,742.08- to be executed by formal contract through Office of General Counsel.

Attachments: Recommendation Memo, Exhibit "I1", Previous Award

BUYER Marilyn Laidler
MARILYN LAIDLER

RESPECTFULLY SUBMITTED
GREGORY PEASE, CHIEF
PROCUREMENT DIVISION

CONCURRENCE BY: **Tom Fallin, P.E., Chief-Engineering & Construction Management Division**

(ALL AWARD ACTIONS SUBJECT TO LAWFULLY APPROPRIATED FUNDS)
ACTION OF CSPEC COMMITTEE ON RECOMMENDATIONS ABOVE

MEMBERS APPROVING 5 MEMBERS DISAPPROVING Ø DATE: 11/30/17

OTHER

Teresa R. Eichner

James R. McCarl

ACTION OF AWARDING AUTHORITY DATE 11/30/17

APPROVED DISAPPROVED:

OTHER:

SIGNATURE OF AUTHENTICATION

Sam E. Mousa
Chief Administrative Officer
For Mayor Lenny Curry
Under Authority of
Executive Order No. 2015-05

SUBJECT: RFQ- FOR DESIGN- BUILD SERVICES OF HORIZONTAL/CIVIL ENGINEERING PROJECTS

BID # CDB-0006-16 OPEN DATE: 10/21/2015

COMPETITIVE SEALED PROPOSAL EVALUATION COMMITTEE

KIND AND BASIS OF CONTRACT:
CONSTRUCTION – DESIGN/BUILD

AGENCY: DEPARTMENT OF PUBLIC WORKS

BASIS OF AWARD: EVALUATION CRITERIA

NUMBER OF BIDS INVITED: 5 NUMBER RECEIVED: 5 OTHER: 1

SUMMARY OF BIDS AND RECOMMENDED ACTIONS:

The City had previously issued this RFP, and the evaluation committee has evaluated proposals. Subsequently, presentations were conducted and evaluated on January 28, 2016. Based upon the combination of proposal and presentation evaluations, scores and rankings are as follows (Listed in alphabetical order):

2) Archer-Western – 118.25
3) Callaway Contracting, Inc. - 100
1) J.B. Coxwell Contracting, Inc. - 121.5

Recommend approval of award to J.B. Coxwell Contracting, Inc., as receiving the highest score in accordance with the evaluation and ranking above. Period of Service will be five (5) years from effective date of contract with funding not-to-exceed $6,000,000.00 annually. To be executed by formal contract through Office of General Counsel.

Attachments: Recommendation Memo, Scoring Matrix, Previous Award

BUYER Marilyn Laidler
MARILYN LAIDLER

RESPECTFULLY SUBMITTED
GREGORY REASE, CHIEF
PROCUREMENT DIVISION

CONCURRENCE BY: Thomas N. Fallin, P.E., Acting Chief-Engineering & Construction Management Division

(ALL AWARD ACTIONS SUBJECT TO LAWFULLY APPROPRIATED FUNDS)
ACTION OF CSPEC COMMITTEE ON RECOMMENDATIONS ABOVE

MEMBERS APPROVING 5 MEMBERS DISAPPROVING _____ DATE: 2/4/16

OTHER _____

ACTION OF AWARDING AUTHORITY DATE 2/04/16

MR APPROVED ✓ DISAPPROVED: _____

Sam E. Mousa
Chief Administrative Officer
For: Mayor Lenny Curry
Under Authority of
Executive Order No. 2015-05

OTHER: _____

SIGNATURE OF AUTHENTICATION _____

SUBJECT: RFQ- FOR DESIGN- BUILD SERVICES OF HORIZONTAL/CIVIL ENGINEERING PROJECTS

BID # CDB-0006-16

OPEN DATE: 10/21/2015

COMPETITIVE SEALED PROPOSAL EVALUATION COMMITTEE

KIND AND BASIS OF CONTRACT:
CONSTRUCTION – DESIGN/BUILD

AGENCY: DEPARTMENT OF PUBLIC WORKS

BASIS OF AWARD: EVALUATION CRITERIA

NUMBER OF BIDS INVITED: 5 NUMBER RECEIVED: 5 OTHER: 1

SUMMARY OF BIDS AND RECOMMENDED ACTIONS:

The City had previously issued this RFP, and the evaluation committee has evaluated proposals. Based upon the proposal evaluation, the average scores and rankings are as follows (Listed in alphabetical order):

2) Archer-Western Contractors, LLC. – 91
1) J.B. Coxwell Contracting- 92
3) Callaway Contracting- 74

Pursuant to Section 2.6 – Award of Contract of the RFP, recommend approval to conduct formal interviews with each of the three-top ranked Firms.

Attachments: Recommendation Memo, Scoring Matrix, Bid Tabulation, Section 2.6, JSEB Letter

BUYER Marilyn Laidler
MARILYN LAIDLER

RESPECTFULLY SUBMITTED
GREGORY PEASE, CHIEF
PROCUREMENT DIVISION

CONCURRENCE BY: William J. Joyce, P.E., Chief-Engineering & Construction Management

(ALL AWARD ACTIONS SUBJECT TO LAWFULLY APPROPRIATED FUNDS)

ACTION OF CSPEC COMMITTEE ON RECOMMENDATIONS ABOVE

MEMBERS APPROVING 5 MEMBERS DISAPPROVING _____ DATE: 12-30-15

OTHER _____

ACTION OF AWARDING AUTHORITY DATE 1/01/16

APPROVED ✓ DISAPPROVED: _____

OTHER: _____

Sam E. Mousa
Chief Administrative Officer
For: Mayor Lenny Curry
Under Authority of:
Executive Order No. 2015-05

SIGNATURE OF AUTHENTICATION

FISCAL MO/YEAR : 03 2018 CURRENCY CODE :
INDEX CODE : PWPB5A1MAPR BUILDING MAINTENANCE - PUBLIC BUILDINGS
SUBOBJECT : 03410 CONTRACTUAL SERVICES
PROJECT :
PROJECT DETAIL :
GRANT :
GRANT DETAIL :
USER CODE :

S	DEC 2017	ANNUAL BALANCE	ALL YEARS BALANCE
ESTIMATED REVENUES	.00	.00	.00
REVENUES	.00	.00	.00
UNREALIZED REVENUES	.00	.00	.00
BUDGET	.00	2,245,536.52	2,245,536.52
EXPENDITURES	76,990.05	247,555.55	247,555.55
ENCUMBRANCES	-62,436.19	904,413.16	904,413.16
PRE-ENCUMBRANCES	.00	.00	.00
REMAINING BALANCE	-14,553.86	1,093,567.81	1,093,567.81

F1-HELP F2-SELECT F4-PRIOR F5-NEXT
F9-LINK F10-PRIOR-MO F11-NEXT-MO

G005 - PRIOR RECORD DISPLAYED