JACKSONVILLE HISTORIC PRESERVATION COMMISSION

October 22, 2025

City of Jacksonville

Ed Ball Building, 1st Floor - Room 1002
214 North Hogan Street - Jacksonville, Florida 32202

A NEW DAY.

Jacksonville Historic Preservation Commission Meeting

Wednesday, October 22, 2025 at 1:00 PM

Members:

Ethan Gregory, Chair
Michael Montoya, Vice Chair
William Hoff, Secretary
Julia Epstein
Becky Morgan
Thomas Love

AGENDA

RULE 4.505 DISRUPTION OF MEETING No member of the audience shall applaud nor make any noise or remarks that are audible to the Committee that would indicate approval or disapproval of anything being discussed. Any disregard of this rule may result in removal by the Security.

REQUEST TO SPEAK: 1. Fill out a speaker card.
2. Sign in if you are going to speak.
3. Read the rules on the back of the card.
4. Place card in tray labeled "Speaker Cards".

BREAKS: Will be taken at 3 PM, 5 PM and every two hours thereafter until the close of the meeting.

NOTE: The next regular meeting will be held Wednesday, November 12, 2025.
COMMENTS FROM THE PUBLIC. Comments from the public shall be limited to no more than three minutes per person and no person shall be allowed to give or transfer his/her time to speak to another person.

ADDRESSING THE BOARD/COMMITTEE. At public hearings required by law or fixed by the Board/Committee, the presiding officer shall extend the floor to proponents and opponents of the subject matter of the public hearing, and those filing written requests or speakers cards shall be heard prior to other persons who appear at the hearing. Each person addressing the Board/Committee shall proceed to the place assigned for speaking, give his/her name in an audible tone of voice for the records, (if the person has not filled out a speaker's request card and returned it to the Board/Committee staff before addressing the Board/Committee, the person shall also give his/her address in an audible tone of voice for the records), and limit his/her comments to three (3) minutes, unless further time is granted by the Board/Committee. All remarks shall be addressed to the Board/Committee as a body and not to any member thereof. No person other than a Board/Committee Member or the person having the floor shall be permitted to enter into any discussion, either directly or through a member of the Board/Committee, without the permission of the presiding officer. All questions to the Board/Committee shall be directed through the presiding officer.

Speakers may appeal the decision of the Commission on an item they addressed. Appeals shall be made to the City Council within twenty-one (21) days of the date of the Final Order in the matter. To appeal, file a Notice of Appeal with the Legislative Services under §307.203, Ord. Code. Failure to file a Notice with the Legislative Services Division within the time prescribed waives the right to appeal the Order.

A. Call to Order/Verification of Quorum

1. Submittal of Speaker's Cards
2. Breaks at 3 PM, 5 PM and every two hours thereafter until the close of the meeting
3. Approval of Minutes from September 24, 2025

B. Deferred Items

1. **LM-25-07** (913 5th St W)
2. **COA-25-32139** (1375 Wolfe St)

C. Consent Agenda

1. **COA-25-32904**
   Location: Riverside Avondale – 618 Stockton St
   Applicant: Cyndy Trimmer, Driver, McAfee, Hawthorne & Diebenow, PLLC
   Owner: Jacksonville Association of Firefighters IAFF Local No. 122, Inc.
   Request: New Construction – Addition
   Staff Recommendation: Approve With Conditions

2. **COA-25-32959**
   Location: Riverside Avondale – 1718 Osceola St
   Applicant: JAA Architecture
   Owner: Thomas Lyons
   Request: New Construction – Accessory Structure
   Staff Recommendation: Approve with Conditions

3. **COA-25-32709**
   Location: Springfield – 1206 Hubbard St
   Applicant: JoAnn Tredennick
   Owner: JoAnn Tredennick
   Request: Alterations – Reroof
   Staff Recommendation: Approve with Conditions

D. Previously Deferred Items to be Heard

1. **COA-25-32249**
   Location: Springfield – 1552 Pearl St N
   Applicant: Lauren Prater
   Owner: Lauren Prater
   Request: Alterations – Window Replacement
   Staff Recommendation: Approve with Conditions

E. Condemned Properties

F. Historic Designations

G. Certificates of Appropriateness

1. **COA-25-32716**
   Location: Springfield – 1417 Laura St N
   Applicant: Richard Trendel, Petra Contracting, LLC
   Owner: Richard Trendel, Kymata Investments, LLC
   Request: New Construction / Alterations
   Staff Recommendation: Approve with Conditions

2. **COA-25-32942**
   Location: Riverside Avondale – 2652/2654 Dellwood Ave
   Applicant: Jon Thomas, Team K5
   Owner: Tesfaye Selmawit
   Request: Alterations – Window Replacement
   Staff Recommendation: Deny

H. Certificate of Appropriateness / Work Initiated or Completed Without a COA

I. Appeal of Administratively Approved COA's

J. Minor Modifications to Previously Approved COA's

1. **MMA-25-32924**
   Location: Springfield – 1310 Liberty St N
   Applicant: Don Gullion, Dream Finders Homes LLC
   Owner: Dream Finders Homes LLC
   Request: Alterations – Windows
   Staff Recommendation: Deny

K. Public Comments

L. New Business

M. Information

1. 2026 JHPC Dates and Deadlines
2. 2026 COA Matrix (Draft)
3. Demolition Delay Report
4. Pending Legislation
5. Notification of Improvement Projects

N. Old Business

1. TDC JAX, LLC v. City of Jacksonville (16-2024-CA-000087-AXXX-MA)

O. Design Issues

P. Addendum

Q. Adjournment

1. Submittal of Speaker Cards

Jacksonville
Historic Preservation
Commission

2. Reminder of Meeting Break Times

Jacksonville
Historic Preservation
Commission

3. Approval of the Minutes

Jacksonville
Historic Preservation
Commission

CITY OF JACKSONVILLE

HISTORIC PRESERVATION COMMISSION

MEETING

Proceedings held on Wednesday, September 24, 2025, commencing at 1:01 p.m., at the Edward Ball Building, Hearing Room 1002, 214 North Hogan Street, Jacksonville, Florida, before Diane M. Tropia, FPR, a Notary Public in and for the State of Florida at Large.

PRESENT:

WILLIAM HOFF, Acting Chair.
JULIA EPSTEIN, Commission Member.
BECKY MORGAN, Commission Member.
THOMAS LOVE, Commission Member.

ALSO PRESENT:

ARIMUS WELLS, Planner Supervisor, Planning Dept.
DREW JOHNSON, Planning Department.
CALEB ARSENAULT, Planning Department.
CARLA LOPERA, Office of General Counsel.

- - -

P R O C E E D I N G S
September 24, 2025 1:01 p.m.
- - -

THE CHAIRMAN: Okay. I am hereby calling this meeting of the Jacksonville Historic Preservation Commission to order, and welcome each one of you.

Let the record reflect that it is now 1:01 p.m.

I will begin with introductions to my left.

MR. WELLS: Arimus Wells, Planning Department.

MS. LOPERA: Carla Lopera, Office of General Counsel.

THE CHAIRMAN: William Hoff, acting Chair.

COMMISSIONER EPSTEIN: Julia Epstein, commissioner.

COMMISSIONER MORGAN: Becky Morgan, commissioner.

COMMISSIONER LOVE: Thomas Love, commissioner.

MR. ARSENAULT: Caleb Arsenault, Planning Department.

MR. JOHNSON: Drew Johnson, Planning Department.

THE CHAIRMAN: So we do have four members of the Commission here, so we do have a quorum, and Commissioners Gregory and Montoya are not here.

Some general announcements first. As a courtesy, please silence your phones. There shall be no public displays of support or opposition, and we will be taking a ten-minute break every two hours.

For those that wish to speak here before the Commission today, including applicants, you must fill out a speaker's card and give it to staff. Please mark on the card whether you are for or against the items.

These proceedings are being recorded by a court reporter, so it's important that you speak clearly into the microphone. State your name and address for the record, and only one person may speak at a time, and please keep your presentations focused on the issue on hand.

Each member of the public will have three minutes to speak, including the applicants, unless there has been a request and an approval by me for longer time. The staff will announce

when time is up. If you are in the middle of a sentence, you may complete that sentence.

If you are providing any materials for commissioners to consider, please provide a minimum of ten copies. Any materials that are provided during the presentation will be part of the public record and will be kept by the staff; therefore, please retain a copy of anything you submit if it is needed.

Okay. Items on the agenda are generally addressed in the order in which they are listed. First I will go through the agenda and indicate which items will be considered today. And if you don't have an agenda, they should be out on the table in the hallway.

So the agenda reads: Call to order and verification of a quorum, which we have done.

Deferred items. There's one item there. That's LM-25-07. That will be deferred, so not heard at this meeting.

The consent agenda. These are items where the staff and the applicants have already discussed and agreed to what the conditions will be. So on the consent agenda, there are five items: Number 1, COA-25-32485, for 101

1st Street West; COA-25-32545, for 1470 Avondale Avenue; Number 3, COA-25-32733, for 244 5th Street East; Number 4, COA-25-32679, for 1717 Edgewood Avenue; and Number 5, COA-25-324974, for 751 Stockton Avenue.

Next on the agenda, Letter D, would be the previously deferred items to be heard today. There is one item. That would be COA-25-32249, for 1552 Pearl Street North.

Next on the agenda are Condemned Properties and Historic Designations, which we do not have anything under those sections at this time.

Agenda letter G is for the Certificates of Appropriateness, and there are two items listed here: COA-25-32701, for 3024 St. Johns Avenue; and Number 2, COA-25-32734, for 2257 Ernest Street.

The next part of the agenda will be Certificates of Appropriateness for Work Initiated or Completed without a COA. There are three items under that section: Number 1, COA-25-32139, for 1375 Wolfe Street. Number 2, COA-25-32760, for 141 7th Street West. And Item Number 3, COA-25-32215, for 1635 Hubbard

Street.

Next part of the agenda would be the Appeals of Administratively Approved COAs. We don't have anything in that section.

The next will be Minor Modifications to Previously Approved COAs. We have one item there. That's MMA-25-32776 for 2817 Selma Street.

After that, we will open it up for public comments.

Next section on the agenda will be New Business, and that includes a letter of support for the Oneida Bungalow Court, and then three different street namings.

And then the last section with items in it on the agenda is general information, which includes the JHPC plan for next year, any demolition delay reports, pending legislation, and notification of improvement projects.

So that is the full agenda that we'll be going over today.

Okay. So we will start at the top of the agenda. Again, if you plan to speak, please submit those speaker cards to staff.

We will consider approval of the

Commission's minutes from August 27th, 2025.

I will entertain a motion.

COMMISSIONER EPSTEIN: Motion to approve the minutes from the August 27th, 2025, meeting.

COMMISSIONER LOVE: Second.

THE CHAIRMAN: Any discussion on that?

COMMISSION MEMBERS: (No response.)

THE CHAIRMAN: Okay. Seeing none, all in favor?

COMMISSION MEMBERS: Aye.

THE CHAIRMAN: Any opposed?

COMMISSION MEMBERS: (No response.)

THE CHAIRMAN: Okay. That has been approved.

Next on the agenda would be the deferred items. As I mentioned, landmark LM-25-07 for 913 5th Street West will not be heard. It's being deferred.

Next is the consent agenda, and I previously described what the consent agenda means. So there are five items on the consent agenda that we will consider, but because this is a quasi-judicial matter I need to ask if any commissioners have ex parte discussions to

declare on the consent agenda items.

COMMISSION MEMBERS: (No response.)

THE CHAIRMAN: No? Okay.

We will open the public hearing. Does anybody wish to come up and speak on any of these five consent agenda items?

AUDIENCE MEMBER: (Indicating.)

THE CHAIRMAN: And, again, these are the items where the applicant and the staff have already discussed what the conditions are and both parties are in agreement.

(Audience member approaches the podium.)

AUDIENCE MEMBER: I'm not sure if I need to come up here. They asked me to be here for this, for one of the consent ones.

THE CHAIRMAN: Okay. If you can state your name and address for the record.

AUDIENCE MEMBER: I'm Steve Chisholm -- Steven Chisholm, and I'm here for 1470 Avondale Avenue, and it's one of the consent ones.

THE CHAIRMAN: Okay. So you can speak if you want to, but you don't have to if you've already agreed to --

MR. CHISHOLM: So once this goes, we're good to go and -- and everything is done?

THE CHAIRMAN: (Nods head.)
MR. CHISHOLM: Perfect. They just said I had to be here, so I just want to make -- so I'm done having to be here?
Thank you guys very much.
MS. LOPERA: Through the Chair, sir, the item hasn't been approved yet. It was just -- we're giving you an opportunity to speak if you so chose. But if you're in agreement with all the staff conditions, they're about to vote on the consent agenda as a group.
MR. CHISHOLM: Okay. Yeah, we saw the consent. It's not an issue at all.
Thank you guys very much.
THE CHAIRMAN: Thank you.
(Mr. Chisholm exits the proceedings.)
THE CHAIRMAN: Okay. Anybody else want to speak on a consent agenda item?
AUDIENCE MEMBERS: (No response.)
THE CHAIRMAN: Okay. I'm going to close the public hearing, and I will entertain a motion.
COMMISSIONER EPSTEIN: Motion to approve the consent agenda including COA-25-32485, COA-25-32545, COA-25-32733, COA-25-32678

[sic] -- -79, sorry, and COA-25-32497.
COMMISSIONER LOVE: Second.
THE CHAIRMAN: Any discussion on these items?
COMMISSION MEMBERS: (No response.)
THE CHAIRMAN: No? All right. All those in favor?
COMMISSION MEMBERS: Aye.
THE CHAIRMAN: Are there any opposed?
COMMISSION MEMBERS: (No response.)
THE CHAIRMAN: Okay. Seeing that it was voted unanimously, those have been approved.
So if you are here in the audience for one of these five consent agenda items, those have all been approved, and you can leave if you want or you're welcome to stay and observe.
We'll give those applicants just a moment to leave.
Okay. Next up on the agenda are -- is the previously deferred items to be heard. That would be COA-25-32249 for 1552 Pearl Street North.
Please note that on the agenda, the staff recommendation is to deny; however, the correct staff recommendation is to approve with

conditions.
Is the applicant here?
(Audience member approaches the podium.)
THE CHAIRMAN: Let me first open the public hearing.
All right. Sorry --
AUDIENCE MEMBER: No worries.
THE CHAIRMAN: -- let's hear from the staff --
AUDIENCE MEMBER: Yes, sir.
THE CHAIRMAN: -- first.
Mr. Wells, is there a staff report that you would like to share?
MR. WELLS: To the Chair and to the Commission, we previously issued a staff report at our August 27th meeting, so I won't issue another staff report, but, if anything, I'll just update you all on the progress that was made.
So since the last meeting, the applicant has met indiv- -- well, online with staff as well as Commissioner Epstein to get into the details behind what the proposed window product would be and what it would look like.
I know also the applicant provided us with

an updated window -- or, I'm sorry, wood destroying organism, so WDO, report. That should be included within the book package itself, which assesses the amount of termite damage and wood decay on the existing windows.
But in terms of the window product, the applicant did, again, provide some details. I don't know if much progress was made in terms of satisfaction with Commissioner Epstein, so I will yield to her on that, but that's where we currently stand in terms of -- our recommendation still stands -- remains the same, but additional evidence was provided in terms of the window product information.
THE CHAIRMAN: I will ask the commissioners if they have any ex parte discussions to declare on this item.
COMMISSIONER EPSTEIN: Yes. Through the Chair, I do. I had emailed Lauren a few times to try and get some clarification on the dimensions for the -- the rail dimensions that we had discussed, and some more information about the windows. And I believe all that is included in our packet.
THE CHAIRMAN: Okay. Are there any

additional questions for staff at this time?
COMMISSION MEMBERS: (No response.)
THE CHAIRMAN: Okay. Is the applicant here?
AUDIENCE MEMBER: (Indicating.)
THE CHAIRMAN: Please come forward, state your name and address for the record.
AUDIENCE MEMBER: Yes. Hi.
My name is Lauren Prater, 1552 North Pearl Street, Jacksonville, Florida 32225.
(Raises right hand.)
THE REPORTER: Do you affirm that the testimony you are about to give will be the truth, the whole truth, and nothing but the truth?
MS. PRATER: I do.
THE REPORTER: Thank you.
MS. PRATER: First and foremost, I want to say thank you to Commissioner Epstein for working with me to try and get something that would be approved by the board.
I know that last time I was here, Commissioner Morgan, you, as well as Commissioner Hoff, both of you guys expressed an interest in trying to get the WDO.

The first time I was here, I explained I was but a mere woman and I just didn't understand what was going on with the windows, but I actually had a WDO prepared when I had initially purchased the house, so I was able to provide that.
Additionally, I brought my window expert because there's -- I know things are getting lost in translation, so I'm hopeful that he would be able to answer some questions.
I know that, Commissioner Epstein, you expressed that there were some features of the window that I was proposing that might not be approved by the board, and I think that (noise interruption) will speak a little bit more to that to help clarify.
Additionally, I did canvass the neighborhood to try and provide pictures of some other houses in my neighborhood that have the window that I am proposing today.
My next-door neighbor, whose house is virtually identical to mine, has the exact same window that's being proposed.
And then my other neighbor, who's also next door, has a -- an exact window, but the

house style isn't similar.
But I'm hopeful that that would be persuasive here and that any additional questions for the board would be able to be answered by Jesse.
And thank you, Arimus, as well.
THE CHAIRMAN: Are there any questions for the applicant at this time?
COMMISSIONER EPSTEIN: I think my biggest question is -- it looks like you've brought an example of the window.
AUDIENCE MEMBER: Yeah.
COMMISSIONER EPSTEIN: So I think we'd all like to see it because I still had some questions about what those actual bottom and top, you know, rails were going to be dimensionally and how this was going to look.
And there were some different pictures we had sent around. So, yeah, I would love to see the actual window.
MS. PRATER: And I think -- I also -- I know we sent a couple of pictures back -- I sent a couple of pictures to you, Commissioner.
But Jesse did provide pictures of the window as installed in other homes so that the

board would be able to see what they look like, and I can resubmit those if we don't have them.
(Audience member approaches the podium.)
THE CHAIRMAN: Sir, before you speak, could you please state your name and address for the record and be sworn in?
AUDIENCE MEMBER: Jesse Waters (phonetic).
THE CHAIRMAN: And your address?
MR. WATERS: 55- -- 4571 Heston Road, Jacksonville, Florida 32207.
THE REPORTER: If you would raise your right hand for me, please.
MR. WATERS: (Complies.)
THE REPORTER: Do you affirm that the testimony you are about to give will be the truth, the whole truth, and nothing but the truth?
MR. WATERS: I do.
THE REPORTER: Thank you.
MR. WATERS: Okay. So my name is Jesse from Window World, and I have been speaking with Lauren about this whole situation. Certainly, we've been going back and forth, you know, in hopes of being able to help fix up the homes downtown a little bit better and make

life more beautiful for everyone.

The window we have here is a vinyl double-hung window. It's an insert window. We call that "retrofit." It's actually designed for the specific need of wood -- wood clad windows, which is what was in her house; it's what's in the whole entire state of the north; everyone has these wood-out [sic] windows.

So how it's designed is for stops to be removed and for this window to slip in the existing window frame while also maintaining the look of the existing window that's there.

Like she was saying, both neighbors -- when I walked up initially, we saw immediately -- I've been in windows for 15 years, and I was able to recognize this exact window in both of her neighbors' houses.

So that's -- I think has been the challenge, where we understand where y'all are coming from, wanting to keep the exact look and identity of the -- of the system, which is certainly a very expensive option because in that sense you would be ripping out the whole wall, you'd be going back with a full, giant system. It's almost quadruple the price, where

most Americans just don't have that kind of finances, and this is a much better product for -- easier for install, easier for maintaining that look, as well as the longevity of the product.

So, you know, we, obviously, want to help Lauren out the best way we can. And also -- this is my first time dealing with an historic district as much as I have, so that's why I'm trying to partake in all this so we can all be on the same board [sic] with everything, to -- to figure out what it takes to be a smooth process with everything, so --

She was able to take pictures last night of exact -- of the windows of her neighbors up front. And you can tell, if you compare, apples to apples, the windows look identical.

THE CHAIRMAN: Okay. Any other questions for the speaker at this time?

COMMISSIONER EPSTEIN: Yeah. Through the Chair, I had asked this question. The perimeter of the window --

MR. WATERS: Yes.

COMMISSIONER EPSTEIN: It was discussed that that is how the double-hung action kind of

occurs. In the pictures that Lauren had sent of the adjacent homes, I didn't see that those had this thick -- it's like an inch and a half, kind of -- that kind of goes around --

MR. WATERS: (Off microphone.)

Can I -- this is actually her neighbor (indicating on cell phone); it's the exact same brick.

COMMISSIONER EPSTEIN: Yeah, it looked like molding or something -- like brick molding -- like a brick mold.

MR. WATERS: Sure.

COMMISSIONER EPSTEIN: Like, this is -- this house would be a brick mold, which makes sense.

MR. WATERS: Right.

Right. So if you flip -- can you pass this?

MS. PRATER: I also have hard copies if you --

(Simultaneous speaking off microphone.)

MS. LOPERA: If you could speak one at a time and into the microphone, that would be very helpful for our court reporter.

MS. PRATER: Sorry, Madam Court Reporter.

THE REPORTER: Thank you.

COMMISSIONER EPSTEIN: Looking -- I'm sorry. As an architect, looking at that -- and then I know portions of this house have a stone look to them. A brick mold piece would be something that you would have, and what that is kind of simulating there --

MR. WATERS: (Off microphone.)

Look at that one right there that Arimus has. You'll see (inaudible). The red -- the red one right here, this is her neighbor that's a direct -- so that's going to give you more trim around the window look.

COMMISSIONER EPSTEIN: Yes. This has trim. It doesn't have that, like, inch and a half --

MR. WATERS: So what you're seeing on this window --

COMMISSIONER EPSTEIN: Is the trim on top.

MR. WATERS: It's -- the trim is on top, so what -- when the window goes in, it actually needs to bump up against that trim, so that's going to remove about three-quarters of an inch. So you're basically seeing just this part here (indicating). You're not seeing the

whole thickness here.

COMMISSIONER EPSTEIN: Yeah, I understand.

MR. WATERS: And that's what you've got in that picture. That's a vinyl replacement window in that picture.

COMMISSIONER EPSTEIN: Yes.

These look entirely different to me because this -- again, this is like a masonry detail that would have a brick mold around it, and it's a lot thicker. That makes sense to me.

This (indicating), I can really only see the window sashes. I can't see that really thick trim that you have there.

So that's my question.

MR. WATERS: (Off microphone.)

I'm going to zoom in with my phone on this picture so you can see this.

Okay. So here is zoomed in, so you can see it's the red. And I'm going to zoom in right here (indicating). Try to -- try to look a little closer. You're going to see --

You're getting -- you're seeing this part (indicating), you're seeing this rail here, and then this part in here is actually bumped up

against the existing wood. So that's what you're seeing.

COMMISSIONER EPSTEIN: Yeah, I'm just not seeing that same -- like, it looks to me here (indicating) -- that thickness, I don't see it -- the left exposed there. Maybe I just -- I don't think -- because that's, like, about an inch and a half of flat, flat thickness there.

MR. WATERS: (Off microphone.)

Let me do this here.

Okay. So I'm going to point out this rail first here. This -- that's too skinny, so that's (inaudible).

COMMISSIONER EPSTEIN: That's the actual window --

MR. WATERS: This is the actual window.

So you've got -- this -- sorry. There we go. Okay. So you've got this part, right here (indicating). That is this part, right here (indicating).

COMMISSIONER EPSTEIN: Yes.

MR. WATERS: Right there (indicating).

And then you have this part, right here (indicating).

COMMISSIONER EPSTEIN: Uh-huh.

MR. WATERS: That is this part, right here on the model.

COMMISSIONER EPSTEIN: I guess I'm just -- I don't see that those are the same thickness. It looks like that that's, like, an inch and a half. And what is on that picture there looks like it's maybe, like, a half of an inch.

It looks to me like it's the same size as the double-hung actual sash frame.

MR. WATERS: Sure.

COMMISSIONER EPSTEIN: And looking at it here (indicating), to me, it looks like it's about three times the size of that.

So that's my question.

MR. WATERS: (Off microphone.)

Sure. Well, the thing with vinyl windows, and (inaudible) --

THE CHAIRMAN: Sir, can you speak into the microphone, please?

Thank you.

MR. WATERS: So the thing about -- with vinyl windows is that they do differentiate from the old aluminum windows or the old wood vinyl needs to be thicker to have strength. So there's a set standard for all windows across

Florida. They have to have a certain thickness.

We didn't hold a tape measure up against that, you know, or -- you know, obviously, we sent pictures of this (indicating), but all vinyl -- as an installer for 15 years, I've seen all brands of windows -- Pella, Andersen, you name it; I've seven them all. They all have that exact three-and-a-quarter thickness with the exact thick rail. It's -- and you -- some companies will be about a quarter-inch difference, but for the most part they're all going to be the same because they have to have that structure and stability in order to be that.

So, I mean, we certainly could go back and hold a tape measure against it and say, you know, that's going to be that versus, you know, this, but, you know, I -- I can guarantee you it's going to be within a quarter inch.

COMMISSIONER MORGAN: Through the Chair to the applicant, I just want to say that that's exactly what we've been asking for in these meetings is, like, what is -- down to the half inch, what is it? That's what we're trying to

replicate here.
MR. WATERS: Okay. And -- definitely.
And we can certainly -- we went back and forth a little bit with the Pella window that you all sent us. That was the exact double frame --
COMMISSIONER EPSTEIN: Yeah, and actually when I sent --
MR. WATERS: -- vinyl brand --
COMMISSIONER EPSTEIN: I'm sorry to interrupt you.
When I sent that Pella, I was speaking more of that bottom --
MR. WATERS: The bottom rail.
COMMISSIONER EPSTEIN: -- sash because when you have a historic window -- and you can see very clearly here (indicating) -- that bottom piece is significantly larger than the rest of your stiles and rails because, historically, you would have had hardware there --
MR. WATERS: Sure.
COMMISSIONER EPSTEIN: -- and they would have been screwed into the middle of it.
So when -- that's kind of -- I was looking

for more of that dimension --
MR. WATERS: Sure.
COMMISSIONER EPSTEIN: -- which I -- it looks to me here that -- it does look like it's larger than the rest of it, but, still, I -- I want to -- I wanted to know what that was because in the documentation that we were sent, it -- it wasn't very clear, the actual dimension of --
MR. WATERS: Sure, sure.
That's why I did send the pictures of the actual window with the tape measure up against it, to kind of give you that view --
COMMISSIONER EPSTEIN: Yes.
MR. WATERS: -- which we had right here (indicating). It's 3 and three-quarter inches on just the base. From this point (indicating) to the very bottom, where it sits all the way up to here, is going to be that thickness.
Now, these windows will actually come with half screens. So once those screens are in -- just like -- just like the old windows actually had a full screen, so you really -- it started to make it disappear. You're not going to see that as much.

You know, right now you're seeing that screen rail. But if you pull it up, that's the actual thickness of the sash with the frame, so you do get that thickness that you're -- that you're seeking.
And I guess the best example would be the pictures that we showed you, which, again, if you see the bottom of this one right here -- see how the bottom of that --
COMMISSIONER EPSTEIN: Yeah, that actually, to me, does not look like --
MR. WATERS: (Off microphone.)
No, that doesn't look as thick as (inaudible).
COMMISSIONER EPSTEIN: No.
MR. WATERS: (Off microphone.)
That looks like a thinner (inaudible).
COMMISSIONER EPSTEIN: Yeah, that -- when I saw that picture, I was like, no, that's not what we're looking for. We're looking for something --
MR. WATERS: (Off microphone.)
Right. And -- and as well as this (inaudible) as well.
COMMISSIONER EPSTEIN: So that was another

question I had, is -- what you're showing us here does not look exactly like what is in these pictures, so --
MR. WATERS: This does (indicating). This is going to be -- what you're seeing right here -- and it's hard to tell because this person has a full screen.
MS. PRATER: You have to be in the microphone.
MR. WATERS: So this person right here (indicating) actually has a full screen. So what you're seeing is the screen rail first. It's harder to see the back rail because of the shadow, you know --
And Lauren was doing this last night, so she wasn't going to go start ripping people's screens out of the neighborhood --
COMMISSIONER EPSTEIN: Yeah.
MR. WATERS: -- but -- but yeah, it's -- these are all going to be either single-hung vinyl replacement windows or double-hung vinyl replacement windows, so --
I will say this, that -- right now you've got the double-hung where the top comes down, where that is -- that's what was in the old

house was a double-hung. Switching up to a single-hung would narrow up that top rail, which should be a little bit more that you're looking for because you're not going to have as thick of a frame because the glass will actually be stationary up top. So you would lose out -- we could get rid of this whole entire white channel. So that would be based on what you guys prefer.

And, obviously, going with a double-hung is going to keep the old system, but a single-hung would give it that slightly narrower frame system, so --

We try to give people a better product. That's -- we're a double-hung company.

COMMISSIONER EPSTEIN: Yeah, I -- I understand. I understand. And I know everybody gets really grumpy about how -- reviewing windows, because everybody wants their nice windows that are energy efficient. When windows are falling apart, it is detrimental to the structure of the home.

And, you know, everybody wants to make a good decision, but we do live in historic districts, so --

MR. WATERS: Certainly.

COMMISSIONER EPSTEIN: -- we need to be able to make the right decision with that in mind.

MR. WATERS: Yep.

COMMISSIONER EPSTEIN: So we're trying to come up with the best solution here for everybody.

MR. WATERS: Yeah, definitely.

COMMISSIONER MORGAN: Through the Chair to the applicant, I have a question about this picture.

(Off microphone.)

Is this a part of the screen or the window?

MS. LOPERA: Commissioner Morgan, if you could speak into the -- somebody's microphone.

COMMISSIONER MORGAN: I'm wondering here on this photo, where the window and the stone -- these little corner pieces, I'm just going to say at first glance, these look really cheap to me. Is this a part of the screen or is this a part of the window?

Because I think part of this is they're going to be more durable, which -- I mean, to

me, it looks like these are going to ugly out long before they wear out, and that's a concern too.

MR. WATERS: You're not wrong. This -- this is a big selling point for us at Window World. We say -- our motto is "simply the best for less," and that's because there's a lot of cheap window companies that are going back with -- where they just want that quick, easy fix.

So that screen in that picture, if you notice, the corners on it have those little, cheap plastic pieces. It looks cheap. This is a solid piece of extrusion metal here (indicating). This is not going to rust, this is not going to fade, it's not going to break. It's a very solid screen that we warranty for life. If there's ever any fading, anything along those lines -- so it's going to last much longer than a wood window.

That window in that picture is a single-hung replacement, so you're getting the look of the vinyl, but that frame looks thinner. It looks like that bottom has had some sort of trim piece on it, so it kind of

goes straight, right to the -- direct to the bottom of this, whereas you're not seeing the underbelly of it a little bit. And then that top is tucked a little bit more away because it's the single-hung, which I was explaining to her.

So there's a lot of variances out there. This is one of the more premium qualities, so -- to help answer that question a little bit.

COMMISSIONER MORGAN: That really does help. Thank you. I thought you were saying it was the same window --

MR. WATERS: No.

COMMISSIONER MORGAN: -- in the photo as what you were proposing.

MR. WATERS: No, no.

A vinyl replacement -- a vinyl retrofit is what we call it, so --

COMMISSIONER MORGAN: I understand.

MR. WATERS: Yeah.

COMMISSIONER MORGAN: Okay. Thank you.

COMMISSIONER EPSTEIN: Arimus, I don't think you got this email. I'm going to forward this to you, and if you could put it on the

screen.

Let me -- I'm sorry, I'm like 90 years old and I have to remember how to forward a message on an iPhone (microphone failure) messages.

It's the one with the dimensions on it.

(Commissioner Epstein confers with Mr. Wells.)

MR. WATERS: And also, I do have a picture of what our window looks like installed in a historic home.

COMMISSIONER EPSTEIN: Yes, can you share that?

MR. WATERS: Yes.

COMMISSIONER EPSTEIN: If you could send it to Arimus, he can put it up on the screen.

MR. WATERS: Okay.

COMMISSIONER EPSTEIN: And through the Chair to the both of you, I will say, Arimus and I spoke before the meeting, and some of these windows of your neighbors did not receive approval from the Commission, so -- I think only one of them Arimus was able to find received approval, and it was back in 2003, so he doesn't even have the data on it. He's requested it from -- wherever data goes when

it's that old.

So just kind of taking that into consideration --

MS. PRATER: I snitched.

MR. WATERS: Lawbreakers.

MS. PRATER: Sorry.

COMMISSIONER EPSTEIN: You might want to buy your neighbors flowers tonight.

MR. WATERS: So she's going to send that up, but would you like to see it on my phone where you can zoom in a little easier?

THE CHAIRMAN: If we could just wait until he has the -- has it, that would be great.

MR. WATERS: Sure.

COMMISSIONER EPSTEIN: Yeah, I think -- through the Chair, I think this is a little bit more of what we've been asking for, is the actual dimensions of this.

I know that Lauren had sent us the schematic of all the different parts and pieces, but nowhere did it say, when it was assembled, what the actual dimensions of everything were. And I tried to do some math in CAD and everything with it, and I was like, you know what, I need to know from you guys --

I can't make my own --

MR. WATERS: Right. And that's why I went out and I set this display up and I held the tape in front of it because, with the engineering on this product, it does not give a -- a built together -- piece by piece, whereas there may be certain manufacturers that do. You know, we're able to just hold it up in front of you with the tape. That's what I was trying to do.

COMMISSIONER EPSTEIN: So yeah, I think the tape -- you can kind of see that the bottom rail is larger than the -- kind of the other rail systems. I'm still not a hundred percent sure. I think it's at least a half of an inch larger.

MR. WATERS: Yeah. Yeah, I -- and, again, that top -- see how you've got about an inch before -- from this piece up in here (inaudible) is about an inch. That gets -- that bumps up against the existing trim on a window, so the sides and the top get buried, whereas the bottom stays exposed.

COMMISSIONER EPSTEIN: Yes. And I would just say that if we did do an approval on this,

that inch and a half that goes around the whole system -- let me see what you guys call it so I make sure that I'm using the right terminology.

MR. WATERS: Yes.

A side rail, a top rail.

COMMISSIONER EPSTEIN: Is it in your -- its labeled 1, I believe, in your schematic.

MR. WATERS: Okay. I'm looking for the --

COMMISSIONER EPSTEIN: In your schematics, in your parts and pieces --

MR. WATERS: Yes. Number -- there's the keeper rail, bottom rail, top rail.

COMMISSIONER EPSTEIN: I thought it was labeled "1," actually.

MR. WATERS: And I wanted to show you this also. So this right here that you highlighted with the blue, that was actually the wrong measurements that were highlighted. That was -- that was just showing the sash itself. It wasn't wrong; it was just -- we -- when you look at it, you look at it from the whole bottom frame to the top of the sash is what you're going to see.

COMMISSIONER EPSTEIN: Yes, but I still wanted to know what that sash --

MR. WATERS: Sure, sure.
COMMISSIONER EPSTEIN: -- was to compare the top and the bottom.
MR. WATERS: (Off microphone.)
Gotcha. And I think I held up the comparison (inaudible) --
THE CHAIRMAN: Sir, if you could go back on the microphone.
Thank you.
MR. WATERS: I'm going to not forget one of these days.
Yeah, 1.9 inches is the bottom of our rail, of our bottom rail, whereas Pella's was 1.75. So our bottom rail is actually about an eighth inch thicker than Pella's.
COMMISSIONER EPSTEIN: So your frame and head jamb, that -- in a wood siding installation with wood trim, that has -- the trim overlaps it some amount.
MR. WATERS: Correct.
COMMISSIONER EPSTEIN: So you don't have that full --
MR. WATERS: Correct.
COMMISSIONER EPSTEIN: -- 2.6 inches.
MR. WATERS: Correct.

And you can kind of see that in the picture that -- I don't know if Arimus, did he get it? If he uploaded it with the -- the one of -- where it's this exact window (indicating) installed in a wood home.
Lauren, I just sent it to you. I don't know if you received it.
COMMISSIONER EPSTEIN: Yeah, and I understand why it looks so different with -- when it's installed with brick, because with brick you don't have trim, you just install it in the rough opening, and then that's why you need a brick mold to (microphone failure). So it sort of acts as a brick mold in that respect. But then when you have a wood siding that requires trim around it, I --
I would be inclined for us, if we approve this, to have some sort of stipulation that the trim does overlap at a good portion so we don't have this really thick --
MR. WATERS: Sure. Well --
COMMISSIONER EPSTEIN: -- frame piece going around it.
MR. WATERS: And with this brick house -- it's the same whether it was the brick or the

picture with the red siding. You're still seeing the original, giant, built-in window frame, just -- on the brick house, they just bricked right up to that -- that frame. With this -- so the frame of the original window is not changing. The system that we do is exactly the same, and that's -- we remove the interior quarter stops, we pull out the old sashes, and we slip the whole new system in.
So what you're seeing on this picture is identical to what it looks like with that. So that doesn't change it at all. There's no -- and you're calling it a brick mold, but that's actually the original framing of the window, so it does look identical.
COMMISSIONER EPSTEIN: Okay.
MR. WATERS: I know it's confusing. There's -- I've been doing windows for a long time. It's --
COMMISSIONER EPSTEIN: No, I just think we're using different terminology, so --
So through the Chair, I would just like to hear what the other commissioners are thinking at this point in time because I know there was some concerns about what the window was going

to look like and some concerns about those different rail heights and everything. So now that everybody has -- do you all need more information? What are -- where are you all kind of thinking now?
COMMISSIONER MORGAN: Through the Chair to Commissioner Epstein, I'm kind of leaning on you for the dimensions and making sure that everything is correct and the mounting and installation.
I think my heartburn is still with the vinyl. This is not about you. This about how things are done. And that's why I think earlier, the past two meetings, I've been kind of saying, well, are we going to approve this? I didn't want to send you to go look into this unless we were okay with opening it up for vinyl, which I understand is what meets your budget and what would be best for you personally.
I'm interested in everyone else's thoughts as well.
MR. WATERS: And I guess -- I have a question apart from Lauren, as a business standpoint -- you know, vinyl is really the new

across-the-board with everyone. Ninety-five percent of the companies out there, vinyl is all that's being made. Obviously, you're historical districts, we want to keep looking pristine and redoing -- but going off of that, does that stop me from even -- you know, if we were to not go through with this, would I say, well, historical districts are just no longer allowing vinyl at all, so we just need to stay away from that?

COMMISSIONER MORGAN: Through the Chair, I think that -- I mean, that's kind of what we're talking -- that's something that is generally a no. It wouldn't even come to us; it's just a no.

MR. WATERS: Okay.

COMMISSIONER MORGAN: And so that's why in this first meeting, I was kind of like, hey, we can talk about numbers, but are we going to entertain vinyl windows?

MR. WATERS: Sure.

COMMISSIONER MORGAN: And --

THE CHAIRMAN: So I would just say that it is a case-by-case basis, yeah.

MR. WATERS: Yeah, because I know we have

done quite a few already with vinyl. So, you know, being that both her neighbors have vinyl, you know, I guess -- we see it as an act of begging and mercy, please let this slip through because we --

She walked that whole block, and she sent me pictures of every single house that has vinyl replacements, and homes that had been remodeled completely went back with vinyl windows. They just -- because they ripped out the whole entire system and then just went back with brand-new nailing fins, wasn't even a slip-in. So, basically, it was this exact window with nailing fins, they put the new wood siding. There was a couple of houses down that did that, so -- worse on the whole block. It was -- it was predominantly vinyl, so --

MS. PRATER: And, Commissioner, I would just ask, along the lines of "beg," that I not be the case to have that ruling be decided on because when I applied, vinyl was, in fact, an option from what I was -- otherwise, I wouldn't have been able to apply for vinyl windows.

So I would ask that if that is something, like, maybe moving forward because, again, we

wouldn't have even went through all of this if it were never even on the -- if it were not an option at all.

So I would just ask that, if that is something that the board is considering -- I have a full window repair. Like I said before, I poured a lot of money into this house to get it to be someplace that I can call home. If that is something that the board is looking to do, this way applicants don't go into it investing that kind of time.

COMMISSIONER MORGAN: Through the Chair to the applicant, I'm seeing that you're kind of asking for an exception. The answer is normally no. So I'm not making you a case. I'm saying, are we making a case? Are we -- is that not the case anymore? That's what I'm saying. That's what I'm saying. It's really not about you. It's not about this particular thing. It is a case-by-case basis, but, generally, I would say no.

MS. PRATER: Okay.

COMMISSIONER MORGAN: That's just how I feel about vinyl windows in an historic district.

THE CHAIRMAN: Could I ask staff a quick question?

Generally speaking -- and I know each application is unique -- how do you evaluate the material type when looking at a window project like this?

MR. WELLS: Thank you.

So to the Chair, there's a number of options we can elect. This is all based on the COA matrix. And so window replacement -- if we've deemed that the windows were missing metal or nonoriginal, we can replace them with any type of window material as long as it matches the compatible -- it's a compatible design placement and arrangement.

The same thing goes for noncontributing structures. And a third one would be new construction. So when you do see these new construction COAs that come before you, usually they're requesting a vinyl product.

So those are the only three types of exceptions that we have for other materials besides wood.

COMMISSIONER EPSTEIN: So through the Chair to staff, when it is a holistic window

replacement, the matrix does leave that (microphone failure) open? Is that what (microphone failure) the matrix (microphone failure)?

MR. WELLS: Through the Chair to Commissioner Epstein, so when it's a holistic window replacement, it would be -- we -- it doesn't give you a wider option for materials unless the windows have been deemed missing, nonoriginal, or the structure itself is noncontributing.

Now, if the structure is contributing, then we usually limit it to a wood or wood blend product.

MS. PRATER: And just to be sure, I think my windows were deemed -- I think there was an assessment as to whether mine were all historic, and I believe in the valuation I think most of them were not historic or a good amount of them were not historic.

MR. WATERS: Two out of 25 windows were originals.

COMMISSIONER EPSTEIN: Through the Chair to staff, the reason that you are recommending approval on this is because of that window

survey that was done, that the windows were deemed nonoriginal, nonhistoric?

MR. WELLS: Through the Chair, they were deemed nonoriginal. However, we did find that they may have contributed -- or achieved historic significance because they've been on the structure for more than at least 50 years or so. We believe that the windows were replaced in around the '60s or '70s, so that's why we forwarded it to you as well, along with the window product.

COMMISSIONER LOVE: Through the Chair to Commissioner Epstein, you wanted to know some additional thoughts.

So from what I recall from last month's meeting and discussion, the whole vinyl window aspect not withstanding, I think there was some thoughts expressed that there are vinyl windows that could be nearly indistinguishable from historic windows. I remember that specifically.

My concern with this is just making sure that I understand -- and I'm actually kind of leaning on you a little bit on this, and I've been listening very carefully to the

discussion -- that that external frame -- and I'm trying to understand and make sure that I understand what precisely would be visible --

Because looking at the model that you have in some of the photos, you know, I get the impression there's too much frame exposed, if that makes sense, you know. And Commissioner Epstein had mentioned something about making sure that -- since this is a wood frame house, it looks like there's kind of stucco on the exterior, that -- that an appropriate level of coverage is obtained. I mean, I think that's my primary concern.

MR. WATERS: So those are great concerns. And when I bring samples into people's houses a lot of times -- we have a slider that we use as well that has an actual impact rating frame -- the first response I get out of people is, "Whoa, that's a lot of vinyl," because it's so compact. You're seeing just all this vinyl right next to itself. But when you put it in an opening that's 35 inches wide by 60 inches tall, 72 inches tall, which is what her house is, then it blends in with everything else.

So I completely understand, you see right

here, you're like, bam, looking at a lot of white vinyl right there. But when it gets slipped in the hole and it blends up with the 4-inch trim panel on the outside and it's a large piece of glass, it just blends in beautifully. So it's --

I do completely relate and understand with your -- with your thoughts on that because I get that question a lot. And normally I go through a portfolio and say, "This is what your neighbor's house looks like." And they go, "Oh, that's beautiful."

So just to give you a little alleviation there, and -- I wish I could bring in an entire frame and show you, you know, exactly the differences. And it's hard to see off of the pictures, but, again, this was designed specifically -- all these windows are 3-and-quarter inches thick, and that's designed specifically to fit in all existing wood frame windows from -- from the past. So kind of go off of that a little bit.

COMMISSIONER EPSTEIN: Yeah, I guess that's -- through the Chair, that's still where I have a bit of hesitation, is I am not seeing

in these images here that same thickness that is there. And I think that it is because the window trim is overlapping some of it, but I would -- I want -- I wanted to know how much of that, in the siding installation, we're going to be able to see.

MR. WATERS: Yeah. Well, what we're going to do, if we do get approved -- obviously, it's something you guys are concerned about -- is we will switch her up to a single-hung window where you're not going to see this 1-inch piece right here (indicating). That will --

COMMISSIONER EPSTEIN: No. I'm sorry, I definitely want to see that.

MR. WATERS: Okay. Well, we --

COMMISSIONER EPSTEIN: I definitely -- I think --

MR. WATERS: Yeah, yeah. No, we can.

And, again, I guess it goes both ways on what it is you're looking for because if you want the same mechanics of the old windows, this would be the same mechanics as far as -- the top comes down, the bottom comes up. But if you're looking for the same frame thickness, vinyl isn't as -- you know, it needs to be a

little thicker than --

COMMISSIONER EPSTEIN: Yes.

MR. WATERS: Right.

COMMISSIONER EPSTEIN: I understand, and that's -- that's one of the things you run into when -- I can tell you -- since you asked. You asked earlier, as a window salesperson, you know, do I not even need to be going to the historic districts with vinyl? I will tell you that vinyl, because it has this chunkiness, that it needs to have to meet all of the requirements for deflection and structural approval by the -- you know, the Florida Building Code product approval. That's going to be one of the first things.

Another one of the things is going to be how the connection of it comes together because when you have wood, it comes together. You can sand it, you can caulk it, you can paint it, and it looks more holistic. And in looking at some of these joints here, they're a little bit more easy to see, they might separate with kind of -- depending upon the quality of the window --

MR. WATERS: Not at Window World, ma'am.

You're warrantied for life. Fusion welded on everything.

So, yeah -- no, it's certainly -- we've come a long way. You know, vinyl windows have been around for 50 years, so --

COMMISSIONER EPSTEIN: Yeah. So I had explained in our last meeting that vinyl has gotten better over time. I was trying to be helpful and give information on that. I'm telling you what historic districts usually say about them.

MR. WATERS: Sure.

COMMISSIONER EPSTEIN: So can you speak to the -- your warranty and the quality a little bit here as well?

And I will just say -- and I'm not sure if we'll be able to get this here, but I would like to know how much of that -- the jamb frame is visible once the trim is over it. That's, to me, the question.

MR. WATERS: Well, let me answer those questions, and let me show you a little bit more about our demo to kind of give you an idea.

So we're going to tilt this in here, and

we're going to tilt this in here.

So now, after tilting it in, you see just the frame of the window itself. So if you can envision, now that's what -- with a single-hung, that's what we would do, is we would just put that glass into that existing frame, and you would not have that extra frame up top. So that way the only sash that would move is -- would be the bottom.

COMMISSIONER EPSTEIN: Yes. I know. I'm sorry. I don't know if I'm just not --

When I look at a window, when I look at an historic window, double-hung or single-hung window, it does not have this frame around it. You have the window and then the mechanism happens within the actual jamb of the wall.

MR. WATERS: In the frame itself, correct.

COMMISSIONER EPSTEIN: And you do not see that frame around it.

So I am under the impression that trim will overlap that to some extent, and I'm wondering what that final dimension of that frame you would see --

MR. WATERS: You would take a half inch. The -- I was an installer for ten years, so I

did this every day for a long time.

It's a half inch on both sides that you will be bumping the new window up against on the outside, and it will actually be a caulk line along the window on the outside as well.

So this jamb right here (indicating), which -- inch and probably three quarters -- is what you're going to see. All this white along the side here gets bumped up. The bottom does not bump up against anything.

We actually have to -- because there's a slope on the bottom, we actually have to spray foam underneath it, and then we put about an inch to an inch and a half extra piece of snap trim on it as well, so it does really give it a thicker look.

COMMISSIONER EPSTEIN: So what you're telling me is that I will be able to see that inch and three-quarter of the jamb and head frame?

MR. WATERS: Correct. Yeah, correct. Yeah, I -- correct.

COMMISSIONER EPSTEIN: That, to me, is a bit of a deal-breaker. And I'm sorry, it's -- I just -- that's not how a window would look in

a historic structure. You wouldn't --

MR. WATERS: Sure.

COMMISSIONER EPSTEIN: -- have this additional frame around it.

MR. WATERS: And can I show you this picture? We didn't get a chance to pull it up. This is the one with the brick on the side.

COMMISSIONER EPSTEIN: Yeah, you're -- I'm sorry, you're showing a window in a brick installation. And a window in a brick installation, even with an historic window, has a brick mold that goes on top of it so that that mechanism can work with your brick.

MR. WATERS: Uh-huh.

COMMISSIONER EPSTEIN: To me, if you're putting that in a masonry brick or stone, you could sell me on that because that could act as a brick mold. I'm more worried about where it's -- with the siding and the wood trim.

MR. WATERS: So you want to see the frame of the new window completely disappear, correct?

COMMISSIONER EPSTEIN: Yes.

MR. WATERS: Unfortunately, there's no retrofit system out there that would do that.

She would have to completely rip all the trim off on the inside and the outside, rip the whole existing frame out, and that's where going back with a wood clad system -- which, you know, you go from a $15,000 job to a 75-, $80,000 job. And, you know, that's -- again, if we had walked around -- and I know these people didn't get approved -- we would have said, well, Lauren, you bought a house, and every other neighbor has it done -- but we're seeing every other neighbor on the block has vinyl replacements. So, you know, at the end of the day, it's -- you know, that's kind of my thoughts on it.

THE CHAIRMAN: Okay. We need to move this conversation forward.

So my thoughts, I guess, are kind of that -- does the applicant have any other things to share? We can call you back up for questions.

MR. WATERS: Sure. No.

THE CHAIRMAN: Okay.

MR. WATERS: Unless you would like me to --

THE CHAIRMAN: Thank you.

MR. WATERS: You talked about our company, wanted to know about warranties, but I don't think that really --

THE CHAIRMAN: No.

MR. WATERS: -- yeah, has nothing to do with -- okay.

THE CHAIRMAN: Thank you.

Is there anyone else here to speak on this item?

AUDIENCE MEMBER: (Indicating.)

THE CHAIRMAN: Yes. If you could come up, bring your card, and state your name and your address, please, to be sworn in.

(Audience member approaches the podium.)

AUDIENCE MEMBER: Kim Pryor, 245 West 5th Street.

(Raises right hand.)

THE REPORTER: Do you affirm that the testimony you are about to give will be the truth, the whole truth, and nothing but the truth?

MS. PRYOR: I do.

THE REPORTER: Thank you.

MS. PRYOR: First, I want to say thank you for all of the very detailed discussion and the

attention to detail on evaluating this potential replacement window. That's the enthusiasm and the passion that we need in order to keep our historic districts intact, so thank you for that.

I agree with some of what you were saying in that what was presented here does not match the historic windows.

A couple of things I want to say is that, in -- a sash replacement, just the sash is considered a repair. I don't know if y'all knew that or not. That is considered a repair. So if there are sashes that are, you know, completely rotten with -- the glass is falling -- and you cannot repair -- a repair -- an appropriate repair would be to make a new wooden sash to go in and it would match the profiles on the interior, it would match what was originally there, and so forth. That would still allow the windows -- the sashes to utilize the weight and pulley system within the window frame/jamb and, therefore, retain the historic properties.

I'd like to remind everyone that the Secretary of the Interior Standards for

Rehabilitation for windows specifically states that it is not recommended, removing or radically changing windows, which are important in defining the historic character of the building, so that, as a result, the character is diminished.

Changing the historic appearance of windows through the use of inappropriate designs, materials, finishes or colors which noticeably change the sash, depth of reveal, and muntin configuration -- I don't think we have any muntins in this particular case, even though the example provided had interior muntins -- stripping windows of historic materials, such as wood, cast iron, and bronze.

Replac- -- again, not recommended by the Secretary of Interior. Replacing windows solely because of peeling paint, broken glass, stuck sash, and high air infiltration, these conditions in themselves are no indication that windows are beyond repair.

With all due respect to the gentleman from Window World, he is not an historic window restoration expert. He's an expert in Window World's vinyl windows, I imagine, but he's not

in historic windows. And, therefore, I urge this commission to uphold our historic standards and deny this replacement request.

Thank you.

THE CHAIRMAN: Thank you very much.

Is there anyone else here to speak on this?

AUDIENCE MEMBER: Indicating.

THE CHAIRMAN: Yes, ma'am.

(Audience member approaches the podium.)

THE CHAIRMAN: Please give your name and address to be sworn in.

AUDIENCE MEMBER: Lisa Dunner, 12598 Blue Lagoon Trail in Jacksonville.

THE CHAIRMAN: Yes, ma'am.

MS. DUNNER: Yes. In listening to all that's been said, I just would like to say that in this particular house, most all of the windows, with the exception of two, are not the original windows, do not have those pulley systems and all, and replacing them with a wood blend or a vinyl window would be similar because what I've been told and did research is that the wood blend windows are only wood blend on the inside, the exterior is vinyl, so it

would give a similar look to a vinyl window.

And in looking at all the windows on the street, these windows all look similar to what is being requested. We're not trying to get any window that's different or stand out. It would look like the same vinyl windows that are already in the neighborhood which is a historic neighborhood. So they're not -- we're not trying to change the look of anything.

The vinyl windows that are being requested -- any vinyl window that is being requested would go along with the vinyl windows that are already there. There's several houses in the neighborhood that have vinyl windows, and to say no vinyl windows doesn't make sense to me because there are vinyl windows all around. It's very few windows that are still wooden windows, the original windows, and I just feel like --

Yes, we want to keep it a historic neighborhood. That's one of the reasons we bought into this neighborhood. We love the look of it. We're not trying to change it in any way, just trying to be able to enhance the neighborhood and not have windows that look

decrepit and falling out because, to me, that's far worse than replacing it with something that looks like what's already there in the neighborhood.

Having windows -- and there are houses in that area, around the block, where the windows are really, really bad. And that's an eyesore, to me. But I would wish that -- hope that they would allow people to have windows that look -- keep the same look and refresh the neighborhood, not make it look like things are falling apart.

The average homeowner cannot afford $70,000 windows. And although there's a program that you can apply to, try to get $70,000 for windows, it just seems to me that, A, people are not approved for window -- that kind of money. And in our economy, with all the things that are going wrong in Jacksonville and things that we need to focus on, saying -- putting $70,000 for each window that's -- each home, it just seems like it's throwing a lot of money that could be going to enhancing the neighborhood rather than saying, okay, we have to have --

It's a difference -- if you're saying a quarter of an inch of vinyl as opposed to, let's fix up the houses --

(Timer notification.)

MS. DUNNER: -- and the roofs and the neighborhood itself.

Thank you.

THE CHAIRMAN: Thank you.

Is there anyone else here to speak on this item today?

AUDIENCE MEMBERS: (No response.)

THE CHAIRMAN: Seeing none, I will close the public hearing and entertain a motion.

COMMISSION MEMBERS: (No response.)

THE CHAIRMAN: Question for staff.

This item has been deferred, what, two times; is that correct?

MR. WELLS: To the Chair, I believe that's correct. Yeah, two -- since July, so yes, two times.

THE CHAIRMAN: So I guess before we have discussion on it, we do need to entertain a motion.

COMMISSIONER EPSTEIN: I'll make a motion to deny just so we can start -- a motion to

deny COA-25-32249.

COMMISSIONER MORGAN: Second.

THE CHAIRMAN: Okay. Let's talk about it.

COMMISSIONER EPSTEIN: So through the Chair, I will -- I will just say that -- I think my biggest thing is going to be that thick frame. I'm looking -- and this is -- the thick frame where it meets the wood siding, because, like I said, in a masonry installation you would have brick mold with that sort of (microphone failure).

I don't see any exterior trim currently on any of the pictures of the wood siding, so I don't know if we want to take another month and maybe talk about a strategy where we could do something, some exterior trim to hide some of that.

I think that it's been shown dimensionally, the bottom rail versus the top rail, there's enough of a dimensional difference with this specific window that I think that -- that that looks closer to historically accurate.

My biggest thing is just going to be that thick jamb/frame -- jamb and head frame that

goes around the whole piece right (microphone failure).

COMMISSIONER LOVE: Through the Chair to Commissioner Epstein, I agree.

As mentioned, I think that's my primary issue is the presence of that super thick frame on the exterior. It just doesn't seem appropriate for what we're trying to do.

COMMISSIONER EPSTEIN: Through the Chair, I think that Arimus could take some time to review some of the adjacent properties as well, if that might be something that the applicant wants us to see, to compare with what they have or have not had approved so that we can look at this.

I know it isn't -- it isn't entirely fair that people replace their windows without getting approval from us here, but I know it does -- it does seem like, "Well, they did it, I should be able to do it," so I -- I think if we can do a little bit of research as to what has happened on that street, that that might be helpful to go along with this.

That's all I got.

COMMISSIONER MORGAN: Through the Chair to

staff, I want to thank you for the explanation on why we're discussing the vinyl windows, which sort of changes things for where I stand.

Last month, I was really excited about Commissioner Epstein's thinking that this could work and look right, and I -- you know, that was my thought with moving forward. But, you know, if we're going to compromise the materiality, then we can't compromise the rest.

The only other thing that I wanted to state -- and I'm not sure if you guys picked up on this -- was the screen in that that needs to cover the entire opening, instead of half, as demonstrated in the sample, the window screen. And so I think that that may affect some things as well.

I'm just say- -- ideally, I think this is the conversation we should have had three months ago with the window man, and then come back with the solution. And I hate that it's drug out this long, but I really do think that's the best solution if we're going to make the vinyl work.

THE CHAIRMAN: Yeah, my thoughts are -- kind of align with Commissioner Morgan's. You

know, generally -- just kind of generally speaking, not a fan of installing vinyl windows in historic properties. Of course, everything's on a case-by-case basis.

If there was a product that could replicate the historic windows, then I think that would be ideal. And I'm assuming the product that was presented today is the closest that they can obtain at this time.

So I hear that the Commission would like to allow the applicant to continue to work on this and provide some additional information which would mean potentially another deferral.

Can we ask the applicant to return to the microphone?

(Ms. Prater approaches the podium.)

THE CHAIRMAN: Would you be okay with additional time to try and address some of the more specific concerns that have been brought up here?

MS. PRATER: Yes, a hundred percent.

I would just ask -- I know that there was an option as well, if -- the window man explained that if he, like, redid the frame, then that would alleviate Commissioner

Epstein's concerns. If -- you know, maybe I can try and figure out how to work with that as a -- because right now time is of the essence. So if that would be accepted --

And then, I'm sorry, just one more thing because -- I know, Commissioner Morgan, you expressed your interest about the historic district. I just read -- and I could be wrong, but I reread my report, and I think it said that most of my windows were not contributing; they were not original and noncontributing. I think it was like 12 to 15 of them, which I think was one of the concerns with whether or not vinyl would be replaced [sic], so I just --

I don't know if I'm mis-seeing that, but I understand that -- your concerns, and I just wanted to make sure that you didn't think that I was just coming up and arbitrarily saying things, but I think -- they did say that a lot of my windows were --

COMMISSIONER MORGAN: No, thank you. I think that was clarified through staff.

MS. PRATER: Okay.

COMMISSIONER MORGAN: And there was some discussion while you were out as well --

MS. PRATER: Okay. Thank you.

Sorry. I didn't just want to be --

COMMISSIONER MORGAN: No, that's okay. It would be important to me, but I don't know --

MS. PRATER: Thank you.

THE CHAIRMAN: Okay.

COMMISSIONER EPSTEIN: Yeah, through the Chair to the applicant, I will just say, I think it -- it's a little bit more out there, that there might be some other options for you with how your windows were presented in the window summary. And I think that everybody just wants to make sure that we're coming up with the best solution for what is happening with these windows, so --

MR. WATERS: On that note, I just want to say, your comment about the screens, screens do come as a full screen option. There's lots of options out there with windows nowadays. It wouldn't be a problem at all to go with a full screen to keep that look identical.

And with her whole bottom floor, she has that brick -- that brick look. That doesn't have a frame around it, so we would just be -- that would give you the look you're looking

for. It would be the upstairs that would have that double thickness that you're, like -- you don't want that look.

And I already discussed with her an option to reframe and rebuild the whole -- basically remove the entire existing window frame, and then we slip our windows in to a reframed unit so it would look identical to what you're looking for, but we didn't want to go to that route unless -- you know, because it's an extra expense, obviously. But if that's, you know, what you're looking for, we certainly can make that happen, except for the downstairs. There's no options because of that existing brick, so -- which would -- it would look identical to the ones upstairs because you don't have that big, chunky trim around it, so --

COMMISSIONER EPSTEIN: Yes, and I -- I'm just speaking from my own experience, that historically if you put a window in a masonry opening, it requires a brick mold that goes around it that's about an inch and a half thick, so --

MR. WATERS: Yes, but not with her design.

That's a very unique design. It has, like, a metal channel around it, so it's a -- it's a clean cut edge. I mean, you could. We certainly could make a window smaller to allow for brick mold, but there wouldn't be a need for it --

THE CHAIRMAN: Okay. So if you are open to a deferral for one cycle, you can have these conversations with staff.

And please clarify with staff what exactly is being asked for because I think everyone wants you to have functioning windows in good condition. It's how to get there. So with that said, I'm going to --

MS. LOPERA: Through the Chair, could I, just real quick, summarize what's happening here?

THE CHAIRMAN: Sure.

MS. LOPERA: It sounds to me like you all don't take issue with replacement of the windows that are being requested. Is that an accurate assessment?

COMMISSION MEMBERS: (Off-microphone reply.)

MS. LOPERA: Okay. The issue is the

product. She really wants this product. You all take issue with the product.

Okay. So what I think -- the motion on the table is to deny your COA because they take issue with the product. I don't think anybody takes issue with replacing them; it's just what are you going to put in the window opening. Okay?

So you have a couple of options here. They're giving you the option to defer it to either come back with a different product or come back with some real specific things that address all the concerns. It's your choice, what you want to do, but the product is the issue. Okay?

So if you want a deferral, they're giving you that opportunity to come back next month, or you can allow them to vote on the motion to deny, which is the motion on the floor.

MS. PRATER: Yeah, like I previously said, I'm happy to come back next month.

MS. LOPERA: Okay.

MS. PRATER: Yeah.

Is there a way, I don't know, just to make it a little bit -- like streamline it to set

up, like, a time to maybe have a conference or if I could come in, or is it just via email?

COMMISSIONER EPSTEIN: You would have to ask counsel.

MS. PRATER: Okay.

COMMISSIONER EPSTEIN: Yeah.

Counsel, can you --

MS. LOPERA: Sorry. What was the question? Could you repeat that, through the Chair?

COMMISSIONER EPSTEIN: And, like, if I'm included. If I'm included in, like, a meeting with staff, like how -- how does that work, quasi-judicial?

MS. LOPERA: I would reach out to Mr. Wells, as your staff contact.

I believe you're the staff contact on this; is that correct, Mr. Wells?

MR. WELLS: That's correct.

So you can set up a meeting with us, and --

MS. PRATER: Okay.

MR. WELLS: -- we can elect to have maybe one of the commissions there --

(Simultaneous speaking.)

MS. PRATER: Okay. It's just --
MR. WELLS: -- (inaudible) --
MS. PRATER: Okay. Thank you.
MR. WATERS: Could I ask one question?
So --
THE CHAIRMAN: Can you please direct that question to the staff? We --
MR. WATERS: Well, it was -- it was in reference to -- not so much him, but as y'all's -- y'all's thoughts.
The product you say you didn't like, so you're saying you don't want a vinyl product?
MS. PRATER: No. They didn't say that.
MR. WATERS: All right. Well, then never mind. We'll continue.
MS. PRATER: Yeah, forget it.
MR. WATERS: I'm just going to grab those pictures.
Thank you all for your time.
THE CHAIRMAN: Okay. Sure.
All right. So that item will be deferred for one cycle. Our next meeting on this will be October 22nd, 2025.
Okay. Next item on the agenda would be Certificates of Appropriateness. So number 1

is COA-25-32701. This is a quasi-judicial matter. Do commissioners have ex parte discussions to share or to declare?
COMMISSION MEMBERS: (No response.)
THE CHAIRMAN: No?
Okay. Is the applicant here?
AUDIENCE MEMBER: Yes.
THE CHAIRMAN: Okay. Just wanted to check.
Okay. We will open the public hearing and hear the staff report.
MR. ARSENAULT: Thank you.
Through the Chair to the Commission, COA-25-32701, for the property located 3024 St. Johns Avenue, seeks to construct a two-story addition to a primary structure, demolish an unlisted accessory structure, construct a one-story accessory structure, modify the location of existing fencing and gates, and modify the location and design of hardscaping, including walkways and a driveway to a contributing property within the Riverside Avondale Historic District.
The property is a lot of record with a shared access easement. The primary structure

is a two-story frame vernacular characterized by its hipped roof with composition shingles and a brick chimney, its use of wood shingle siding on the second story and stucco on the first, its 6-over-1 sash windows and 1-over-1 lights.
The unlisted accessory structure can be characterized by its hipped roof and composition shingles and its wood shingle exterior.
As proposed, the noncontributing addition on the primary structure will be removed and a new two-story addition will be constructed in its place.
Additionally, the accessory structure will be demolished and replaced with a larger accessory structure.
Finally, the location of hardscaping and fencing will be adjusted to accommodate the new construction.
Staff should note that the subject property does not have frontage along any public right-of-way but is accessed through a shared access easement; therefore, the subject property is not readily street visible.

Generally, these scopes of work are consistent with the Ordinance Code criteria and design guidelines with the following notes:
The overall scale, massing, and directional expression of the proposed accessory structure are consistent with the primary building. The design and materials of the proposed siding, doors, and windows, as well as the hipped roof form will be compatible with the historic features on the primary structure.
Staff recommended that more window openings be added to the rear and right elevations of the accessory structure to maintain uniformity and limit blank wall space. The applicant provided an example of this change in their elevations on September 2nd, but it should be noted that these are not the elevations that the applicant and owner are requesting.
Staff finds the design of the structure with the added openings more consistent with the historic architecture and compatible with the primary structure. As such, staff is conditioning the application to be consistent

with the elevations submitted on September 2nd.
The applicant stated that since the rear and right elevations will be along an existing wall, the windows will not have a practical function. As such, they are requesting the design as submitted on September 3rd.
Additionally, the applicant is proposing to construct the accessory building with a standing seam metal roof to coincide with the requested reroof of the primary structure. As explained further on in the staff analysis, metal roofing material is not historically associated with the primary structure, and as such, staff has conditioned the accessory structure to have a composition shingle roof.
The applicant is proposing to reroof the primary structure from composition shingles to standing seam metal. There's no evidence that the structure had a metal roof, and as such, staff has conditioned the reroof to be carried out with composition shingles. In the report there it should read "Condition Number 19."
To coincide with the requested reroof, the applicant is also requesting that the accessory structure be built with a standing seam metal

roof. Because the replacement of composition shingles with standing seam metal is incompatible and is a conjectural alteration to the property, staff has also conditioned the accessory structure to be built with a composition shingle roof.
To summarize, staff has conditioned specifically Conditions Number 9, 10, and 19 so that the accessory structure shall have the design with the added windows on September 2nd; the accessory structure shall have composition shingles for the roofing material; and the reroof and addition will have composition shingles as well.
With these conditions, we forward to you a recommendation for approval with conditions.
THE CHAIRMAN: Thank you very much.
Are there any questions for staff at this time from commissioners?
COMMISSION MEMBERS: (No response.)
THE CHAIRMAN: Okay. The applicant is here. If you would please come up and state your name, address, and be sworn in, please.
(Audience member approaches the podium.)
AUDIENCE MEMBER: Lewis Scott Hurst, 3024

St. Johns Avenue.
THE REPORTER: If you would raise your right hand for me, please.
MR. HURST: (Complies.)
THE REPORTER: Do you affirm that the testimony you are about to give will be the truth, the whole truth, and nothing but the truth?
MR. HURST: I do.
THE REPORTER: Thank you.
MR. HURST: Hi.
I really -- the only thing -- I don't have any questions about the conditions that have been placed on this with -- seeking one clarification, which is regarding the additional windows that have been requested on the accessory structure, which is the garage.
I think, if you can look at -- I think it's Page 13 and 14, you can see the difference between the two. Yeah, so on this particular drawing -- and the question -- the windows in question are the ones on the -- I guess it's probably the east elevation. Yeah, on the -- the right side, at the top. So you'll see there's two. And what's being proposed by

staff is that that goes to four. And then on the back side it goes from one to two, opposite the garage doors.
You know, I would seek to go with the -- the less windows, particularly because for that structure, the -- where those windows are at is directly adjacent to a 6-foot masonry wall from the adjoining property, so there really -- there is no visibility of those windows even from the neighbors or from any other public aspect.
The same holds true for the back, which, you know, I'm proposing one window versus two. You know, really there's about a 4-foot distance to a 6-foot chain-link fence to an adjacent property, which is no long- -- is not visible from the public.
So what I am seeking, other than the conditions, you know, placed -- that is the only clarity that I am seeking today, and stand by for any questions.
COMMISSIONER EPSTEIN: Through the Chair to the applicant, so you are okay with not doing the metal roof?
MR. HURST: I have opinions on it, but I'm

okay with not doing the metal roof.

You know, I make my statement, which is, you know, I do think in an historic district we're going to have to make a decision if, you know, composite shingles continue by our insurance industry to become almost a replaceable commodity that we have to do every ten years. You know, I do think, you know, we -- the Commission needs to consider, are we going to allow for more permanent-type, you know, roofing in the district, but I understand and willing to comply with it as directed.

COMMISSIONER EPSTEIN: Yeah. Through the Chair, we've had that discussion up here, and I think -- where we've kind of landed on that is we're not able to make a decision about the future of insurance companies, and they could, tomorrow, tell metal roof people, "Hey, you know what, it's a wind-driven state, your clamps are going to come undone," and you know, they could say, "You need a new metal roof," which --

MR. HURST: Yeah, and I was prepared to -- at one point to come here and say I would look at, you know, metal shingles. But, you know,

nowhere can I -- to your point, can I find an insurance company that says "Oh, yeah, I'm going to allow you to maintain those throughout the warranty of those structures," so I understand the conundrum.

But since I was doing this -- I was seeking to do this so that I wouldn't have to do it again in ten years, so that was my -- so I will accept the recommendation as provided.

COMMISSIONER EPSTEIN: Through the Chair to the applicant, I -- if you had to come back in 10 or 15 years, I'm sure that staff would just approve it for you to do it administratively, just as an FYI, if you went shingle to shingle.

MR. HURST: Yeah. Thanks.

COMMISSIONER EPSTEIN: For your information.

THE CHAIRMAN: Any other questions for the applicant at this time?

COMMISSION MEMBERS: (No response.)

THE CHAIRMAN: Okay.

MR. HURST: Thank you.

THE CHAIRMAN: Is there anyone else in the audience here to speak on this item?

AUDIENCE MEMBERS: (No response.)

THE CHAIRMAN: Okay. I will close the public hearing and entertain a motion.

COMMISSIONER EPSTEIN: Motion to approve COA-25-32701, striking Condition 9 -- well, actually, I guess editing Condition 9.

I'm sorry. I wasn't ready. I'm sorry. I want them to be able to do the window design that they want, so --

THE CHAIRMAN: So question for staff.

Could you repeat the summary that you gave at the end of the report, please?

MR. ARSENAULT: Through the Chair to the Commission, it sounds like Commissioner Epstein is interested in allowing the fewer windows.

COMMISSIONER EPSTEIN: Yes.

MR. ARSENAULT: Okay. So that would -- that amendment to 9 would read, "consistent to the plan submitted on September 3rd."

COMMISSIONER EPSTEIN: So then -- so then Condition Number 9 would say, the design of the accessory structure shall be subsequently consistent to the plan submitted on September 3rd.

Isn't that what 8 says? I guess that's

the size and location. So yeah.

So, I'm sorry, I will move to approve COA-25-32701, amending Condition 9 to read: The design of the accessory structure shall be subsequently consistent to the plan submitted on September 3rd or as otherwise approved by the Historic Preservation section.

THE CHAIRMAN: Is there a second?

COMMISSIONER LOVE: Second.

THE CHAIRMAN: Any discussion?

COMMISSIONER EPSTEIN: Through the Chair, my thoughts on it are that it is in such a non-viewable portion of the property, so far back, up against adjoining structures, that, additionally, are further back on their property, and having the fence structures that are there, I -- I think what they've shown is acceptable in my opinion.

THE CHAIRMAN: Any other thoughts?

COMMISSION MEMBERS: (No response.)

THE CHAIRMAN: All right. I tend to agree with Commissioner Epstein.

Okay. All in favor?

COMMISSION MEMBERS: Aye.

THE CHAIRMAN: There are no opposed, so

COA-25-32701 is approved with conditions.

Okay. The next item is the second Certificate of Appropriateness that we're hearing today, COA-25-32734, for 2257 Ernest Street.

If you could raise your hand if you are here to speak on that.

AUDIENCE MEMBER: (Indicating.)

THE CHAIRMAN: Okay. Thank you.

We're going to open the public hearing and ask for a staff report.

MR. JOHNSON: Through the Chair to the Commission, COA-25-32734, for the property located at 2257 Ernest Street, seeks to install clear and tinted storm windows on the exterior of the existing window openings to protect the historic wooden windows on the structure.

The scope of work includes the proposed installation on 11 clear exterior windows on the front and right side of the structure, along with 8 tinted exterior windows on the left-hand side of the structure. The reasoning stated by the applicant for the proposed locations are due to excessive light and heat transfer to the home as the sun sets to the

west side of the home, for not being shaded by taller trees or structures which decreases the overall efficiency of the subject property.

Additionally, the storm windows would also act as protection for the historic windows throughout the structure from water intrusion, preventing further damage.

The proposed windows would allow -- sorry, the proposed tinted windows would allow roughly 44 percent of the light to pass through, according to the specifications provided by the applicant from the company manufacturing the windows. This would mean that the VLT, or visible light transmittance, would be 55 percent.

Although staff is supportive of the applicant's scope of work, we do have concerns about the installation of the eight tinted storm windows and the level of visible light transmittance; therefore, we are recommending the windows to be -- that the proposed tinted windows to be limited to a visible light transmittance of 90 percent or higher, which would mean that's a 10 percent tint, to reduce the visible change this would have on the

exterior of the structure, to prevent obscuring the historic windows they are protecting. This is in Condition 1 of the report.

As such, we forward to you a recommendation for approval with the conditions as noted in the report.

THE CHAIRMAN: Okay. Any questions for staff from the commissioners at this time?

COMMISSION MEMBERS: (No response.)

THE CHAIRMAN: All right. Is the applicant here?

AUDIENCE MEMBER: (Indicating.)

THE CHAIRMAN: Please come forward, submit your card, and state your name and address to be sworn in, please.

(Audience member approaches the podium.)

AUDIENCE MEMBER: My name is Michael Coward. I'm the owner of the property.

THE CHAIRMAN: And your address?

MR. COWARD: 2257 Ernest Street, Jacksonville, Florida 32204.

THE REPORTER: If you would raise your right hand for me, please.

MR. COWARD: (Complies.)

THE REPORTER: Do you affirm that the

testimony you are about to give will be the truth, the whole truth, and nothing but the truth?

MR. COWARD: I do.

THE REPORTER: Thank you.

MR. COWARD: Okay. It's just -- taking a look at the staff recommendation, if you do -- you're recommending a tinted window with 90 percent VLT. No such thing exists in the world. Clear glass that's standard used in windows is 80 per- -- 87 percent VLT with a one-eighth inch thickness. There is no tinted glass with a VLT of 90 percent. You can't get clear glass that meets your tinted glass specification unless you go to a special low-iron glass. This is made -- that a has 90 percent or higher VLT. It's a special order. It -- it's at a raised price.

I am not aware of any window company that use -- utilizing this in their windows, so it's -- it's something that doesn't -- it's not a standard availability.

The other issue that I have is that -- you know, screens have been around since 1820. There's patents awarded in 1820 and 1840 all

the way up through, you know, today's date.

When you put a screen over a window, you reduce the VLT. You know, if you take a look at the four screen products that are sold at Home Depot, they go from 16 percent VLT to, like, 70 percent, so --

My two neighbors have screens. This house has screens. There's a picture included with, you know, what I submitted that shows the screen. And that reduces your ability to see the -- the historic window.

I am one of the few people in Jacksonville who's restored the original windows to the original condition. It took five years. It cost an unbelievable amount of money. It's more work than you people have any idea about. It took me five years, and a window company -- it's -- nobody can afford that type of work. I am somewhat wealthy, so I was able to do it. I'm retired, so I was able to live with boards on my windows for five years. Very few people can do this, but I would like to preserve my windows, and --

(Timer notification.)

MR. COWARD: This house -- I don't know

what that's about.

This house also has -- I'm the fourth generation in it. My great-grandfather built the house. And this house had awnings in the front of the house, it had awnings on the left of the house, and I removed all the awnings when I did the work, but the awnings were there to keep the amount of light coming into the house down.

This house also had screens, full window screens that fit over, and it had the little mounting brackets at the top and the bottom, and I removed the -- all of those when I restored the house.

I don't see why we would discriminate on glass -- having, you know, tinted glass, which would reduce the ability to see the old window, when we allow screens to go up, which reduce -- I mean, why -- why the discrimination that you can put a screen up -- and this window that was just here on display for -- that had a screen, which reduces the visibility of the window frame and sash and all that. I don't understand why it's okay to allow a screen but you can't have tinted glass.

THE CHAIRMAN: Okay. So your time is up.

If we have additional questions, we will call you up here. Okay?

MR. COWARD: Okay.

THE CHAIRMAN: Thank you.

Is there anyone else here to speak on this item?

AUDIENCE MEMBERS: (No response.)

THE CHAIRMAN: Okay. Seeing none, I will close the public hearing and entertain a motion.

COMMISSIONER MORGAN: Motion to approve COA-25-32734 with conditions.

COMMISSIONER EPSTEIN: Second.

THE CHAIRMAN: All right. Let's discuss it.

COMMISSIONER MORGAN: Through the Chair to staff, these photos here, is this a mock-up? Like, is this Photoshop or is this a real window on the -- like, a real thing on the window? It says "example of proposed tinted window."

MR. JOHNSON: Through the Chair to the Commission, yes, this is an example of it being installed.

COMMISSIONER MORGAN: Okay. So that's really what it would look like?

MR. JOHNSON: Correct.

COMMISSIONER MORGAN: Okay. I'm going to ask because in the top windows, it's like only the bottom half is tinted, and -- right? The windows above it --

MR. JOHNSON: It does -- it might be some shadow that's being cast on the blinds -- or the shutters behind the window from the middle of the sash.

COMMISSIONER MORGAN: Okay. Thank you for clarifying that.

MR. COWARD: Those are screens on the left and right top.

THE CHAIRMAN: Okay. Sir --

MR. COWARD: There is a screen that goes over the entire (inaudible) --

MS. LOPERA: Through the Chair, the public hearing portion of the item is over.

COMMISSIONER EPSTEIN: Through the Chair, I have a question for the applicant.

THE CHAIRMAN: Applicant, if you could come back up. We have a question for you, please.

(Mr. Coward approaches the podium.)
THE CHAIRMAN: Please speak into the microphone.
MR. COWARD: Okay.
COMMISSIONER EPSTEIN: Yes. My question -- I have an assumption, but I'd like to hear your answer. Where you're putting the storm window on top of the window, you would not have the screen still installed? You would just have the storm window installed; is that correct?
MR. COWARD: Yes, that's correct.
COMMISSIONER EPSTEIN: So you wouldn't have an overlapping of the screen and the storm window?
MR. COWARD: Right.
COMMISSIONER EPSTEIN: Okay. That's what I thought. I just wanted to get a clarification.
Thank you.
COMMISSIONER MORGAN: I have a question for the applicant.
Through the Chair to the applicant --
THE CHAIRMAN: One more.
COMMISSIONER MORGAN: -- I just really

want to understand the situation here because I'm seeing a window, I'm seeing shutters. And you're trying to control the light coming into the house. So you want to get light, you just don't want it as bright as it is?
MR. COWARD: No, I'm -- what I'm trying to do is preserve all the work I did on the wood windows. When you restore a hundred-year-old window it is not as good as it was when it was built. The missing portions, you use epoxy -- two-part epoxy. And you cannot buy wood that was -- the wood that was available -- like, my house has -- what do you call that? Heart pine floors. You can't by that product; it doesn't exist. That --
COMMISSIONER MORGAN: I understand. I've lived in old homes most of my life. I completely understand, but --
MR. COWARD: But that wood --
COMMISSIONER MORGAN: So it's really to preserve the outside wood that is painted? That's what it's about?
MR. COWARD: Yeah, the --
COMMISSIONER MORGAN: Or is it about allowing light into the house? I'm just --

MR. COWARD: It's to preserve the upper and lower sashes and the glazing so that they don't get damaged.
I have condensation on the windows, and then rain, and then the UV from the light. And already all that work I did, it's deteriorating, and so I need to --
I put up -- I built that one window that's three-sixteenths inches thick. It's the only tinted glass that Lee & Cates -- Lee & Coats [sic] offers. They're just a couple of blocks away from here. That's one that's their standard, unless they do a special order, but that's their standard that they give for tinted glass.
So I put a piece of that up and put it in, and that completely stops all the condensation, all the moisture, and it helps out with some of the UV, so it'll kind of help to preserve what I've done.
You know, the front of the house I was proposing clear, and the one other side, which doesn't get much sun would be clear also, but just that one side --
COMMISSIONER MORGAN: That's what I'm

getting at, because I understand what you're saying if it's protecting it from the moisture, but I think that just the oddity of the tinted and some tinted and some not, I'm wondering if there's a way that you could -- I mean, is the tint -- the tinting is for light control, not to protect the window.
MR. COWARD: Well --
COMMISSIONER MORGAN: Could you put some shears in there? Like, could you do something flexible on the inside that doesn't require tinting on the outside?
MR. COWARD: Well, the --
COMMISSIONER MORGAN: If it's about light control --
MR. COWARD: I'm just protecting the window on the outside from the sun and from the rain and humidity.
COMMISSIONER MORGAN: I'm struggling to understand how some being clear and some being tinted are protecting the window from the sun.
MR. COWARD: Well, you don't have any rain on the window when you put a storm up.
COMMISSIONER MORGAN: From the sun?
MR. COWARD: From --

COMMISSIONER MORGAN: Because the tint's from the sun, right?

MR. COWARD: From the clouds -- rain from the clouds. You don't have any rain on the window.

COMMISSIONER EPSTEIN: Through the Chair to Commissioner Morgan, I think he is -- the applicant is recommending some to be tinted and some not because of the sun exposure that's on different sides of the home.

COMMISSIONER MORGAN: That would affect the exterior wood that is painted?

MR. COWARD: Yeah.

COMMISSIONER EPSTEIN: I don't know the -- what I believe --

COMMISSIONER MORGAN: That's what I'm kind of trying to understand.

COMMISSIONER EPSTEIN: What I believe the applicant is trying to say is that direct sunlight is having an effect on his wood.

MR. COWARD: The only place on my house that gets direct sunlight which is damp -- really damaging is on that west side.

COMMISSIONER MORGAN: Okay.

MR. COWARD: That's also the side -- over

the driveway -- my grandparents had put awnings up over all that to protect it, but it's really there -- it's the afternoon sun that gets hot. In the morning, it doesn't get hot on the other side --

COMMISSIONER MORGAN: Got it.

MR. COWARD: -- but it's just that one side, so --

COMMISSIONER MORGAN: Okay. Thank you for clarifying that. That helps a lot.

MR. COWARD: Okay.

COMMISSIONER EPSTEIN: Through the Chair, I don't have the background to determine whether the tinting is going to stop the -- like, I don't have that information in my brain, that, yes, if you put some -- a tinted panel up, it's going to be less exposure that's going to -- maybe the paint will last longer or the joints will not expand and contract. I don't have the -- I don't have that information.

I can understand how that would make sense in my mind. I don't have anything definitive on that. But, you know, not having direct -- or limiting direct sun exposure to something

with expansion and contraction, you know, not -- if you have any epoxy joints, you know, I can see how that would -- that would cause issues over time. I don't have any definitive thing on that.

I think my -- just looking at this myself, I think there's a pretty good -- you know, looking at where the storm window is and has been mocked up and where the screen has been mocked up, I think that's a pretty similar looking appearance to me. I don't know what everybody else's thoughts are with that.

COMMISSIONER MORGAN: Through the Chair, I agree with what you're saying, that it looks the same. I think it's the -- this here and that there and ba, ba, ba that is going to look a little chaotic and weird to me.

And also, I mean, the -- it's what I was saying about the last one, the screen and half the window was wrong. It doesn't look right. That's why it's throwing me off. But if it were to have the storm windows in there, it would just be more cohesive.

I think that -- I don't know the specifics on the numbers and everything, but if it's a

limitation of the specific glass, you can get glass and other films to put on it to get that lower.

COMMISSIONER LOVE: Through the chair to staff, I have a quick question.

The recommendation for the tint being lighter, what specifically was that based on?

MR. JOHNSON: Through the Chair to the Commission, that is based on National Park Service briefs -- brief, and historic district design guidelines that were written where they do -- they're vague, but they do state in the design guidelines -- actually, sorry, the National [sic] Preservation Brief Number 3, referring to how the installation of a single-pane storm window can approach the effectiveness of a double-glazed replacement window, and it is recommended to use clear, nontinted, Low-E glass and storm windows to increase the window's performance without sacrificing historic fabric. So that is according to the National Park Service Preservation brief, Number 3, on improving energy efficiency in historic buildings.

And then within the Riverside Avondale

Historic District, the standards, they do reference how the standards themselves permit new windows to be constructed of nonhistoric materials such as aluminum and tint up to 10 percent.

And that is -- that is -- that specific highlighted section is within the book package. And that's -- that's the main reference to any tint of some sort on a historic structure.

COMMISSIONER LOVE: So my thoughts are -- I mean, being a resident of a historic house myself -- and I can understand the desire to preserve all of the work that you put into them, and they definitely are more intensive when it comes to maintenance.

You know, from what I'm hearing, I would probably prefer a fidelity to the guidelines.

THE CHAIRMAN: Commissioner Love, could you be more specific as to what that fidelity to the guidelines may mean to you?

COMMISSIONER LOVE: The guidelines specifically referring to the recommended tint on storm windows. From what I've been able to read, storm windows are permissible certainly, but as was repeated -- or basically just

outlined, it looks like there's very specific guidelines with regards to tinting.

I hope that makes sense.

THE CHAIRMAN: Yeah.

COMMISSIONER EPSTEIN: Through the Chair, I think my confusion comes in the fact -- as the guidelines for the district talk about windows, not storm windows specifically, but the National Park Service brief talks about storm windows.

And I know that -- I've been tripped up in the past because I've alluded to National Park briefs, and they may or may not have been part of what the district follows. So can staff speak to that a little bit?

MR. JOHNSON: Through the Chair to the Commission, with these preservation briefs, they reference and allow for the National Park Service to be able to put forth recommendations, not so -- that are very stringent and specific to be able to -- for different historic districts and landmarks and other historic structures throughout the United States to be able to utilize because technologies do change and the accessibility to

differing materials does change as well. So, in general, they are more or less recommendations that can be, say, used overall, and the interpretations can be -- kind of effectively be used, depending on, say, a certain region because some of these -- and say storm windows in the section itself, some of these can apply to certain areas of the East Coast but then can apply to the West Coast or the Midwest in any part.

So they're still vague, but they're able to be, say, changed over time to be able to conform with what is available and what is becoming available over time, if that answers the question.

COMMISSIONER EPSTEIN: Yes.

So that is kind of where I was leaning with it. When you're not -- these National Park briefs are a recommendation when they are not being held as a specific guideline for landmarking or a tax credit or something like that. So in this instance, this is a recommendation on top of whatever our guidelines for our historic districts read?

MR. JOHNSON: That's correct, yes.

COMMISSIONER EPSTEIN: Through the Chair, I understand what Commissioner Morgan is saying about the mishmash. And I kind of believe that if there's going to be an ask of, you know, "Well, I want to be able to put screens on my windows" -- "You know, that person has screens on their windows, so maybe I want to tint my storm windows, but I only want to do it on this side of my house," then I guess you do have that -- you have that sort of montage of different types that -- that kind of find their way around the house there.

And I know screens are a little bit easier to take off than storm windows.

I'm a little torn on this because I see the logic of -- a screen can obstruct a certain amount, and I kind of follow that. I don't want -- I understand that there's a lot of effort that went into rebuilding these and there's a certain amount of maintenance, you know, you need to do around your house and --

I'm still kind of wrapping my head around all this. That's kind of where I am right now, is I am understanding the logic of screen versus a tinted window, and I'm sympathetic

there. It's more of applying that logic to some parts of the house and not other parts of the house is where I'm getting a little lost.

Through the Chair, if the applicant wants to clarify that a little bit more.

(Mr. Coward approaches the podium.)

MR. COWARD: On my way to the meeting this morning I went by Lee & Coats [sic], and I asked them have they ever bought -- or done a project with this low-iron, special-ordered glass. And so they looked it up, and the Internet was saying it's 40 percent more expensive, but the price that they gave me wasn't that bad. It is available, and I can get it in a 3/16 so it's strong enough with our strong winds here.

The interesting thing that the guy saw -- he looked up the UV. The UV on it was lower than clear glass. And I don't know how the UV compares to the tinted, but it was kind of -- we were kind of shocked that it lowers -- because it allows more light in, but it doesn't have all the iron in it. And for some reason, it has a lower UV than the standard glass, which is only 87 percent VLT.

So that was -- there -- there is a possibility that I could go with that product and just -- because the pricing was pretty good, and it does have the lower UV, and it's 90 -- I didn't get the -- what the -- what it is, but I know it's 90 percent or above on the visible light. So you would see the window better and it lowers UV. So --

It would cost me -- you know, I did buy that one piece of glass. It was 225 bucks. But just to make everything match, I probably could go with -- you know, if they can honor their pricing that they're giving me.

THE CHAIRMAN: Okay.

COMMISSIONER EPSTEIN: Yeah.

THE CHAIRMAN: So --

MR. COWARD: I just found that out on the way here today.

THE CHAIRMAN: Okay. Commissioner Epstein has a follow-up.

COMMISSIONER EPSTEIN: So -- through the Chair, so you're referencing that Low-E glass which is in the historic -- the NPS historic brief, correct?

MR. COWARD: (No response.)

COMMISSIONER EPSTEIN: I'm sorry, I was asking a clarification. I'm sorry.

So through the Chair to the applicant --

MR. COWARD: Low-E glass has lower VLT, I believe. This is a low iron -- the way that it's made, the structural -- they use silicone and various things to form the glass. This has a low iron -- it's a different type of glass. The way it's chemically made --

COMMISSIONER EPSTEIN: Yes. This is a glass they use a lot of times in automotive showrooms. It doesn't --

MR. COWARD: So it's not a Low-E. It's a low iron.

COMMISSIONER EPSTEIN: So, yes, I know exactly what you're talking about because it is -- the way that the glass is made -- they use it in automotive showrooms because it still lets a lot of visibility through, but it stops the UV from going through so it doesn't harm the cars, but you can still see the cars from the street. (Microphone failure) see that.

So I will ask to counsel -- I'm sorry, I feel like I'm always looking for more specific information for us to make a decision

because -- and just because the staff does such a wonderful job preparing our packets here, there was so much information of percentages and visibility and different things like that, and now you're recommending a different product where we don't have that information in front of us.

So I would be inclined to -- if you're willing to do something like that, I would be inclined to get that information and view it at our next meeting so that we can compare and contrast what staff has recommended with this new product that you're saying you would be okay with.

MR. COWARD: Okay. When is your next meeting?

MR. WELLS: October 22nd.

COMMISSIONER MORGAN: I just want -- through the Chair, I just want to ask a quick question. If we're okay with the conditions and the glass meets the specifications, does he really need to come back next month? That's what I'm -- because if we're in line with the -- you know, the percentage of tint --

MR. COWARD: I think this meets the

90 percent VLT, and it's clear, so --

COMMISSIONER MORGAN: So I'm thinking we might -- we might. I don't know. I'm trying to --

COMMISSIONER EPSTEIN: So, yes, if -- through the Chair, if it does meet the conditions that are presented in your packet and it's just a different material, then I would add a condition that we approve this with you being able to present that to staff for the final verification.

MR. COWARD: And if I find out -- I can get back with Lee & Coats [sic] and find out -- and verify that I can get this, and price-wise, it --

COMMISSIONER EPSTEIN: Yeah. If it meets the conditions as they're drawn out in the packet, then I think we just approve this with the conditions, and then it's up to you to meet those conditions.

MR. COWARD: Okay. Then the only thing is it's not a -- you know, the package says it's a tinted -- it's clear. It's not tinted. Does that make sense?

THE CHAIRMAN: Okay. So --

COMMISSIONER MORGAN: So -- go ahead.

THE CHAIRMAN: So to the applicant, is what Commissioner Epstein said okay with you?

MR. COWARD: Yes.

THE CHAIRMAN: If we were to approve with the current conditions -- and then it's your responsibility to find a product that will meet those conditions --

MR. COWARD: Yeah, if I can verify that --

(Simultaneous speaking.)

THE CHAIRMAN: -- (inaudible) --

MR. COWARD: -- (inaudible) that meets that.

THE CHAIRMAN: So if you can't, then you are not able to move forward, though.

MR. COWARD: If I cannot get a product that meets it, then I would wonder if I couldn't have a tint, you know.

THE CHAIRMAN: So if you cannot find a product that meets it, then you would have to --

MR. COWARD: I believe I can, but -- based on what they said this morning, I believe I can meet it.

THE CHAIRMAN: Okay. So if you can't,

then you would contact the Historic Preservation staff and let them know, and we would try and find an alternative.

COMMISSIONER EPSTEIN: We would do a minor modification?

MR. WELLS: That's correct.

THE CHAIRMAN: Okay.

MR. COWARD: I think that --

THE CHAIRMAN: So I just wanted to confirm, you are now okay with the staff conditions as written?

MR. COWARD: Yeah.

THE CHAIRMAN: Okay.

MR. COWARD: I think that will work, and that will make everyone happy.

THE CHAIRMAN: Okay. So we have a motion and a second.

Any more conversation?

COMMISSIONER MORGAN: I just want to say thank you. I've learned a lot today, so -- I might have been geeking out for a minute there.

THE CHAIRMAN: All right. All in favor of approving this COA with the existing conditions?

COMMISSION MEMBERS: Aye.

THE CHAIRMAN: Any opposed?

COMMISSION MEMBERS: (No response.)

THE CHAIRMAN: I'm an aye as well.

And none opposed. Seeing that, COA-25-32734 has been approved.

And we will take a 10-minute break. We will return at 3:21.

(Whereupon, a brief recess was taken.)

THE CHAIRMAN: We're going to resume the meeting. It is 3:25.

Next up on the agenda is Certificates of Appropriateness, Work Initiated Without a COA. We have three of those. The first one is COA-25-32139 for 1375 Wolfe Street.

Does any commissioner have ex parte to declare?

COMMISSION MEMBERS: (No response.)

THE CHAIRMAN: Okay. Let's open the public hearing, and we will hear a staff report, please.

MR. ARSENAULT: Through the Chair to the Commission, COA-25-32139, for the property located at 1375 Wolfe Street, seeks to conduct wholesale siding replacement, pedestrian door replacement, and the widening of the garage

door on an accessory structure, in addition to after-the-fact approval for a poured concrete driveway at a contributing property within the Riverside Avondale Historic District.

Located on a corner lot, the subject property contains a one-story vernacular residence with an unlisted accessory structure.

The applicant proposes to expand the width of the garage door, to replace the wood lap siding with a vinyl lap siding on the accessory structure, and to replace the pedestrian door and the garage doors.

Additionally, they propose to expand the poured concrete driveway to be 20 feet, 3 inches at the curb, narrowing down to 17 feet, 4 inches, it should read there. The driveway expansion has already been completed.

The subject accessory structure is an unlisted garage built outside of the period of significance. The applicant proposes to replace the existing wood siding with vinyl siding due to gaps.

Staff has found the siding to be within repair, with scattered replacement being appropriate for minor patches of rot and

damage.

While the primary structure is clad in mostly vinyl and -- or aluminum siding, according to the property appraiser, the design guidelines and Ordinance Code criteria recommend that materials be replaced to match the replaced material in composition, design, color, texture, and other visual qualities.

The installation of vinyl siding would introduce a new material to this structure that would not imitate the existing material. Furthermore, the presence of vinyl/aluminum siding on the primary structure does not justify the replacement of wood siding on the accessory structure. This is iterated in the historic district design guidelines which encourages historic material to be retained and repaired when possible and allows for replacement with compatible materials and designs when the historic fabric is beyond repair.

The proposed work would change the character of the subject building and would introduce a new material to the structure.

The proposed expansion of the garage doors

is inappropriate for the structure. If the structure were to be utilized as a two-car garage, staff would recommend that there be two garage doors instead of a single door in order to maintain a separation. Regardless, the expansion would present a conjectural change to the structure since there is no previous record of the building having a different size door.

Additionally, the current driveway width does not justify the expansion of the openings since the driveway alterations were conducted without an approved COA and the width and materials of the hardscaping are inappropriate.

The guidelines section on settings iterates that streetscape features are highly significant components of Avondale and Riverside, and new curb-cuts, driveways, and parking on the street side of residences should be avoided unless such features were historically associated with the block or surrounding buildings.

The previously existing driveway was an unknown width and was constructed of poured concrete. The expansion of the driveway to its current size, design, and material is atypical

for the subject property and the district.

The applicant stated that the justification for the driveway expansion was that the previously existing curb-cut was wider than the previously existing driveway. Based on aerial imagery, the driveway expansion was completed shortly before January 14, 2025, and the work was conducted without an approved COA or permit.

Staff has no objections to the proposed replacement of the pedestrian door on the accessory structure as it conforms to the door design guidelines, the district guidelines, and the Ordinance Code criteria.

As such, we forward to you a recommendation for denial with -- yes, denial.

THE CHAIRMAN: Okay. Any questions from the commissioners to staff at this time?

COMMISSION MEMBERS: (No response.)

THE CHAIRMAN: All right. Is the applicant here?

AUDIENCE MEMBER: (Indicating.)

THE CHAIRMAN: If you would please come forward. And if you plan to speak, please give your name, address, and your speaker's card and

be sworn in.

(Audience members approach the podium.)

AUDIENCE MEMBER: Hi.

Darrell Langstaff. Address, 1375 Wolfe Street, Jacksonville, Florida 32205.

AUDIENCE MEMBER: Caroline Langstaff, 1375 Wolfe Street.

THE REPORTER: Sir, I'm going to swear you in first, please. If you would raise your right hand for me, please.

MR. LANGSTAFF: (Complies.)

THE REPORTER: Thank you.

Do you affirm that the testimony you are about to give will be the truth, the whole truth, and nothing but the truth?

MR. LANGSTAFF: Yes.

THE REPORTER: Thank you.

MR. LANGSTAFF: Do you want to --

THE REPORTER: Are you going to speak?

MS. LANGSTAFF: (Off microphone.)

(Raises right hand.)

THE REPORTER: Do you affirm that the testimony you are about to give will be the truth, the whole truth, and nothing but the truth?

MS. LANGSTAFF: I do.

THE REPORTER: Thank you.

THE CHAIRMAN: Okay.

MR. LANGSTAFF: Thank you for all -- thank you all for taking the time to be here today to review this effort. Caleb has been instrumental in helping us on the -- we're not here today to enhance or -- or major appearance changes to the garage or anything like that. It's all about the -- fixing the structure.

THE REPORTER: Sir, I need you to speak into the microphone, please.

MR. LANGSTAFF: Sorry about that.

We're here today to fix the structure, and that -- that was written up in our real estate transaction report in 2021. The structure is in really bad shape, so -- on document A that we distributed a moment ago, indicates a garage that was on the real estate documents that dates back to 1947, contrary to what the Planning Department provided, because they indicated the garage hasn't been there all that long, but --

And then there's also a comment about an unlisted accessory structure, and so I'm

assuming that, again, the garage -- the documents we've been provided show no garage there at all, which is not the case. It's been there since we bought it.

And then in the -- and the material itself is dated 1947. I mean, it's all dry rotted and the whole garage is ready to fall over.

So documents [sic] B indicates substantial structural dry rot problems and the siding with light shining through, very porous to the outside, with rain and wind intrusion into the garage. Again, it's -- it goes back to 1947. It's very, very old wood. There's no bottom plate to the walls. So those studs are literally sitting on the ground.

And I'm not a structural engineer or anything like that, but I'm just going on the basis of what the structural engineer told us, and -- and so they wrote up some -- they drew up some drawings for us to seek approval on them.

And then document C, the garage -- not to jump around, but the garage door submission, that was approved by Brittany Figuri [sic], before she left on -- April 1st, 2025 is when

we submitted it. It should be -- the garage door we thought was approved. I clouded [sic] it, and then there's also an email in there too with the April 1st date on the --

And then on document D, existing double wide 1947 curb -- so that curb hasn't been touched for a long time, and so we thought that it would be okay to continue that up because the existing concrete was basically destroyed. It was just all crushed up into small pieces and causing a lot of mud and so forth to go out onto the street, and all the neighbors complained about that, so that's why we went ahead and did the driveway.

And it made sense to make it wider because the curb at the street was wide, so why not just go all the way up with it was our thought process on it.

We didn't know the permit was required, and so -- that happened back in --

(Timer notification.)

THE CHAIRMAN: Okay. You can --

MR. LANGSTAFF: -- back in March of '24.

THE CHAIRMAN: If you could finish up your --

MR. LANGSTAFF: Okay. And then one more.

And then they -- and on document E, the eight pictures -- yeah, it was eight pictures -- are examples of -- 21 examples that demonstrate double-wide driveways on our street and our street behind us, which is Ingleside. So there's 21 examples, but we just sampled eight today that show the double-wide driveway and also the double-wide garage door. And some of them don't even have windows on it, but the historical society [sic] notes that windows would be best, and that's fine, I'm totally okay with it, but there's a lot of garage doors that don't have the windows on it, so --

THE CHAIRMAN: Okay.

MR. LANGSTAFF: I appreciate your help, though.

Thank you.

THE CHAIRMAN: We will see if the commissioners have any questions --

MR. LANGSTAFF: Okay.

THE CHAIRMAN: -- for you.

Are there any questions for the applicant at this time?

COMMISSIONER EPSTEIN: Through the Chair

to the applicant, you had mentioned that the email said that there was some sort of approval for this garage door?

MR. LANGSTAFF: Yeah, that was in that -- it was like two or three documents back, you'll see the email to Brittany. It was submitted to her and then --

COMMISSIONER EPSTEIN: Yes, I see it was submitted to her. I don't see in here where anyone says, okay, that's approved.

MR. LANGSTAFF: Okay. Yeah, I see what you're saying.

COMMISSIONER EPSTEIN: So I see that you submitted it for review, for administrative review or approval, but I don't see anywhere that it says it was approved.

MR. LANGSTAFF: Okay. I understand.

Yeah, I just -- I submitted it, and then she moved on to other subject matter, so I just assumed -- made the assumption that it was approved because there was no more discussions about it for the next few months, and so -- and I think she left in, like, June I think it was, but -- May or June.

COMMISSIONER EPSTEIN: I think she was

just trying to put together a whole packet, and she took that as, like, an exhibit --

MR. LANGSTAFF: Oh, okay.

COMMISSIONER EPSTEIN: -- is how I'm reading that.

MR. LANGSTAFF: Okay.

Okay. Great.

THE CHAIRMAN: Any other questions for the applicant at this time?

COMMISSION MEMBERS: (No response.)

THE CHAIRMAN: Okay. We will call you back up if we have more questions.

MR. LANGSTAFF: Okay. Sounds good.

Thank you.

THE CHAIRMAN: Is there anybody else here to speak on this agenda item?

AUDIENCE MEMBERS: (No response.)

THE CHAIRMAN: Seeing none, I will close the public hearing and entertain a motion.

COMMISSIONER MORGAN: Motion to deny COA-25-32139.

COMMISSIONER EPSTEIN: Second.

THE CHAIRMAN: Okay. Let's have a discussion about this.

COMMISSIONER EPSTEIN: Through the Chair,

I have no problem with anyone seeing a building that needs to be fixed structurally and fixing it up and everything. I think the questions are about some of the exterior appearances and what needs to be proposed for it to be approved to match the historic -- of the neighborhood.

And as you probably heard with the window discussion earlier, going around and taking pictures of your neighbors' houses, some of the -- unfortunately, some of these people maybe did not follow the rules and they've gotten away with it so far.

So, you know, we'll obviously take a look at these into [sic] consideration, but I think the biggest thing I'm seeing here is the garage door. I think that we probably would like to see something more of two garage doors instead of one single, large garage door.

And, additionally, the vinyl siding is -- that's very -- I don't know that I've ever -- I've been on this commission over three years, I don't know that anybody has ever put on vinyl siding.

MR. LANGSTAFF: Can I comment?

THE CHAIRMAN: If you could wait --

MR. LANGSTAFF: Okay.
THE CHAIRMAN: -- until we have a little bit more conversation first.
Other thoughts?
COMMISSIONER EPSTEIN: About the driveway -- I do see that the driveway size does match the curb-cut. I know we like to see, like, an apron that kind of sweeps in. I don't think that they'll be able to fit two garage doors without keeping the size of the driveway for the structure that you need and the size of a garage door that you need, so I would -- I would be okay with talking about a solution on that to make it so that we could fit within the two sizes of -- the two garage doors.
THE CHAIRMAN: A solution on the size of the --
COMMISSIONER EPSTEIN: Yeah, working with the size of the driveway so that we could have the two garage -- and this might -- this is me. I've given my own opinions. I'm not sure if others want to maintain the one door, but I would think that if you did two garage doors with the required structure you need between

them that this would be the width of the driveway that you need to have to make that work.
THE CHAIRMAN: Okay. So to just --
(Noise interruption.)
(Discussion held off the record.)
THE CHAIRMAN: Does there appear to be room for two separate garage doors?
COMMISSIONER EPSTEIN: I don't -- I'm not sure. You would have to get a contractor to go out there and look at the required structure you would need between the two of them. You might -- I don't -- I don't think so, but -- I don't know the overall dimensions and everything, but it looks pretty tight to me.
COMMISSIONER MORGAN: Through the Chair, it looks pretty tight to me too.
I'm kind of looking -- and I may have missed this in the staff review, but does it have to be two doors or could they just do a larger one to work with the building and to work with the driveway? Because it looks like there's some larger options in the specs submitted.
MR. WELLS: So -- through the Chair to

Commissioner Morgan, just so I understand correctly, are you asking if they're able to just do one large bay rather than two individual bays?
COMMISSIONER MORGAN: Yes.
MR. WELLS: Okay. So, in essence, I mean, we would -- it conflicts with our design guidelines in terms of doing one oversized bay, and then ...
COMMISSIONER MORGAN: Okay. With that in mind, I don't know that they can fit another garage door.
THE CHAIRMAN: So let's talk about each one of these items to see if we have consensus on anything.
Let's talk about the siding. Thoughts on that. I believe Commissioner Epstein already made a comment about the vinyl being used.
COMMISSIONER LOVE: To the Chair, I would concur with Commissioner Epstein on the vinyl.
COMMISSIONER MORGAN: To the Chair, so do I.
THE CHAIRMAN: Okay. And I would agree as well.
What about the issue of wholesale siding

replacement? I mean, I guess it's -- it's already been done, but we're supposed to consider these things as if it had not been done. So would we approve wholesale as the applicant would like or spot replacement as was recommended, I believe, by staff?
MR. JOHNSON: Through the Chair to the Commission, just for clarity, the only after-the-fact work that has taken place was the installation of the driveway. The rest is just proposed.
THE CHAIRMAN: Okay. Good. Great.
Well, that's -- saves people a lot of work then.
COMMISSIONER EPSTEIN: Through the Chair, I know that there's some surveillance camera, nighttime photos in here showing light, and it's streaming through and everything. For me -- and I would think the rest of you, but I will not speak for you. For me to approve a wholesale siding replacement, I would need a WDO review of the siding to show that it is beyond repair in its entirety.
I can see that light streaming through and everything, but there's ways to maintain that

from the exterior if it's not entirely decomposed because of damage. And a lot of times some of these older garages are built with some of that breathability because they don't want to capture the heat and everything as well, so that might just be something that was built that way.

COMMISSIONER MORGAN: Through the Chair to Commissioner Epstein, I was wondering that too since there's no finish on the inside.

COMMISSIONER EPSTEIN: Yes.

COMMISSIONER MORGAN: It's -- like, it's really meant to be open air.

COMMISSIONER EPSTEIN: Yeah.

THE CHAIRMAN: Okay. And --

COMMISSIONER MORGAN: To the Chair, I would agree with staff on a spot replacement on that issue, no vinyl.

THE CHAIRMAN: Okay. Let's go back to the garage door. Quick question for the applicant, if you could come back up here --

MR. LANGSTAFF: Sure.

THE CHAIRMAN: -- please.

(Mr. Langstaff approaches the podium.)

MR. LANGSTAFF: I believe she's got three

minutes left.

THE CHAIRMAN: Sure.

Have you considered two separate doors?

MR. LANGSTAFF: Yes, I have, and like you were mentioning before on just the -- the width isn't -- it's only 18 feet, 4 inches wide, and so it's really not -- yeah, I mean, as it is, I've got to put a beam across, a hefty beam. A structural engineer put some drawings together, and so -- because we only have, I think, about -- roughly a -- you know, less than a foot on each side the way it is with a 16-foot door, so --

THE CHAIRMAN: Okay.

MR. LANGSTAFF: But I'm totally open to ideas and suggestions to move this forward for sure.

THE CHAIRMAN: Okay.

MR. LANGSTAFF: I had a question or -- or it's -- it's just regarding the wood siding. Is there suggestions as far as, like, what type of wood siding that you guys recommend or -- because it sounds like the vinyl isn't the way to go.

COMMISSIONER EPSTEIN: So -- I'm sorry, I

talk way too much.

THE CHAIRMAN: That's okay.

COMMISSIONER EPSTEIN: But through the Chair, what I think we were saying here was it wouldn't be a holistic wood siding replacement unless you could bring us more information that that siding is beyond repair, and you would be going back in and taking out pieces that are beyond repair --

MR. LANGSTAFF: Okay.

COMMISSIONER EPSTEIN: -- and replacing them and kind of making it -- so you would need to match the profile of what is there.

MR. LANGSTAFF: Right. Okay.

And I do have a -- since I did a real estate transaction, I do have a WDO report for the garage. That was part of the whole list of the whole structural stability problem and dry rot, and then you put the -- the WDO on that -- and so -- as well, so I can send that over to Caleb.

THE CHAIRMAN: Okay. So -- thank you.

MR. LANGSTAFF: Okay. Thank you.

THE CHAIRMAN: So back to the garage door. Thoughts?

So I will -- yeah, thoughts?

COMMISSIONER MORGAN: To the Chair -- or through the Chair to the Commission, I feel like how Commissioner Epstein was starting to get at this garage door and the driveway are going to kind of go hand in hand from a scale standpoint. I don't know what the right answer is here.

THE CHAIRMAN: To staff, could you remind us what the -- what factors you would be looking at if you were to -- if you were to approve a new garage door, what would that need to look like to be in accordance with our guidelines?

MR. ARSENAULT: Through the Chair to the Commission, so -- and I think the applicant had a copy in there -- essentially looking at the door design guidelines in terms of style, so typically what we'll see is just a standard, you know, square, rectangular door with four or five -- however many light openings at the top.

In this case, because the proposal is for an oversized door, those garage doors -- it says -- quote here: Garage doors within historic districts typically do not have any

contemporary or modern designs. That's down on the bottom, near the modern and contemporary designs.

And because it does go hand in hand with the expansion of the driveway, and we would only recommend the driveway up to 10 feet with a flair of 12 -- so style-wise, we would want, like, lights at the top of the rectangular door. But as far as a larger door, we couldn't recommend that.

THE CHAIRMAN: Okay.

COMMISSIONER MORGAN: Through the Chair to staff, so just to clarify, there's not a maximum width or specific size?

Here's where I'm going, because I think even if it -- the door is going to have to come out, siding is being replaced. If it could be even a little bit bigger and centered, I think that would look much better, not a double, not the 16, just -- because even now the driveway side, it just looks a little lopsided.

The examples that were provided in the neighborhood, they actually could fit two garage doors. So they're bigger, and that -- and for that reason, the driveway even looks

more appropriate because it's a bigger building.

THE CHAIRMAN: Question for staff. Has the applicant approached you to work on these issues or do they just want to see if their current -- if what they're proposing would be approved as presented? Have they been open to feedback and adjusting things or -- or has that not happened thus far?

MR. ARSENAULT: Through the Chair to the Commissioner -- to the Chair, the applicant has worked on the design specifically of the pedestrian door. In the correspondence, the applicant did work with us to come up with a Craftsman quarter-light design because it will be visible.

THE CHAIRMAN: Okay.

MR. ARSENAULT: And the garage was something that had previously been discussed. It wasn't approved, but it had been previously discussed design-wise, not necessarily the oversize width of it.

And I believe Commissioner Morgan had also asked a question about the door location. So according to the plans, they chose that the

existing garage door is 9 feet. So because our typical conditions for a driveway are 10 feet, we would possibly be open to doing a 10-foot width. I think, obviously, because the driveway has been done, the applicant is interested in expanding the garage door because of that work that's been done.

COMMISSIONER MORGAN: Thank you.

THE CHAIRMAN: Any more thoughts on the driveway other than the steps? Thoughts?

COMMISSION MEMBERS: (No response.)

THE CHAIRMAN: What I'm sensing here, if we were to vote on this as is, it would be denied, I think. And if it were denied -- could staff remind us, if we were to vote on this and it's denied, they would not be able to bring back a similar proposal for a certain amount of time; is that correct?

MR. WELLS: To the Chair, that's correct.

So it would be up to -- they would not be able to submit the same scope of work a year from now, or when the approved final order comes out.

THE CHAIRMAN: Okay.

So to the applicant, if you could come up

one more time, please.

MR. LANGSTAFF: Sure.

(Mr. Langstaff approaches the podium.)

THE CHAIRMAN: Would you prefer additional time to work with the staff to find some solution to the concerns that we have brought up here or would you like us to vote?

MR. LANGSTAFF: Yeah, absolutely, I'd be open. Yes.

THE CHAIRMAN: Yes to the first --

MR. LANGSTAFF: Yeah, I'd be open to working with the staff and finding a solution.

COMMISSIONER EPSTEIN: Through the Chair -- to the Chair, because this is work initiated without a COA, are they receiving a fine every day that this is going on?

MR. WELLS: Through the Chair to Commissioner Epstein, I'll have to double check on the -- if a notice of violation was issued. I think the issue that we ran into is when it was actually -- the work was actually installed, and I think we were getting differing answers. Their email says 2024, but from base maps, it looks like it was installed early 2025, or if not, the latter part of 2024.

(Reporter inquiry.)
MR. WELLS: The latter part of 2024.
So I'll double-check that, but I -- from my recollection, I don't think they've initially been cited.
COMMISSIONER EPSTEIN: Okay. I just don't -- I don't want you guys to continue to get another month's worth of fines if --
MR. LANGSTAFF: Right. Yeah, no, I appreciate that. Thank you.
Yeah, we had a consultant working with us because he had some previous experience on this matter, and he was -- he was misinformed that -- he thought it was existing, and so -- but the -- the date was actually April of '24, so -- and we -- we have a receipt from the concrete company, and it has the mix design per the -- the approved mix design for the City, because you have to be 8 inches -- or -- 8 inches thick for the first 10 feet or 12 feet up.
THE CHAIRMAN: So if you are okay with it, we can defer this for a cycle, until October the 22nd --
MR. LANGSTAFF: Okay.

THE CHAIRMAN: -- if that's enough time --
MR. LANGSTAFF: Absolutely.
THE CHAIRMAN: -- for you to work with the staff to come up with another plan for this --
MR. LANGSTAFF: Okay.
THE CHAIRMAN: -- instead of voting --
MR. LANGSTAFF: Right.
THE CHAIRMAN: Yeah.
MR. LANGSTAFF: And I appreciate it. Thank you.
COMMISSIONER EPSTEIN: That will give you the chance to put your WDO in --
MR. LANGSTAFF: Right.
COMMISSIONER EPSTEIN: -- to give a little bit more information about the existing siding as well.
MR. LANGSTAFF: Okay.
THE CHAIRMAN: So we are going to defer this item until October the 22nd.
MR. LANGSTAFF: All right. Thank you.
THE CHAIRMAN: Thank you.
MR. LANGSTAFF: Have a good day.
MS. LANGSTAFF: Thank you.
THE CHAIRMAN: All right. Next item on the agenda is COA-25-32760 for 141 7th Street

West.
Any ex parte to declare for the commissioners?
COMMISSION MEMBERS: (No response.)
THE CHAIRMAN: No? Okay. We'll open the public hearing and hear the staff report for this item.
MR. JOHNSON: Thank you.
COA-25-32760, for the property located at 141 7th Street West, seeks to remove two street-visible chimneys from a contributing structure within the historic district. The scope of work would include the complete removal of two street-visible chimneys and covering the openings with matching roofing material.
Staff should also note that this is considered after-the-fact work, and also the proposed removal of the street-visible chimneys is inconsistent with Section 307.106(k), numbers 1 through 4. The subject property is a contributing structure with minimal architectural characteristics that distinguish it from many of the surrounding structures along the streetscape.

Slow down. Sorry.
The structure has been defined by its two-story porch, symmetrical chimney placement, and hipped roof and dormer. The removal of one of these features diminishes the minimal architectural features it has for contributing to the Springfield Historic District.
Staff finds the proposed COA inconsistent and incompatible with the design guidelines and the Ordinance Code criteria. As such, we forward you a recommendation for denial noted in the report.
THE CHAIRMAN: Any questions for staff?
COMMISSION MEMBERS: (No response.)
THE CHAIRMAN: Okay. Is the applicant here?
AUDIENCE MEMBER: (Indicating.)
THE CHAIRMAN: Yes, sir. Please come up, state your name and address, and be sworn in.
(Audience member approaches the podium.)
AUDIENCE MEMBER: Leslie Koehler, 5538 Coastal Lane South, Jacksonville, Florida 32258.
THE REPORTER: If you would raise your right hand for me, please.

MR. KOEHLER: (Complies.)
THE REPORTER: Do you affirm that the testimony you are about to give will be the truth, the whole truth, and nothing but the truth?
MR. KOEHLER: Yes.
THE REPORTER: Thank you.
MR. KOEHLER: I'm a certified builder. I was brought into this project by the owners. They had called me to come over. They had not obtained an active building permit. Once I got to the property, I noticed that both chimneys were down. So the first thing I did was call Martin Kennelly, had him come over. We talked about it. I take it he issued the violations.
So right now I have a building permit for that property, waiting for a COA for the chimney of what I need to do and a COA for the work that's going to be done on the exterior.
And that's about it.
THE CHAIRMAN: Okay. Any questions for the applicant at this time?
COMMISSIONER MORGAN: Yes. Through the Chair to the applicant, is that other COA, are we hearing -- are we looking at that today too?

MR. KOEHLER: No, not yet.
COMMISSIONER MORGAN: Okay. Just making sure.
Thank you.
THE CHAIRMAN: I have a question for the applicant. How long have you been working on this project for?
MR. KOEHLER: Well, we had to get a permit -- I mean, we had to get plans drawn, so probably about two to three months.
THE CHAIRMAN: Okay. And do you have any idea when the chimneys were removed?
MR. KOEHLER: I'm thinking about a month before -- you know, that I arrived.
THE CHAIRMAN: Okay. Any other questions for the applicant?
COMMISSION MEMBERS: (No response.)
THE CHAIRMAN: Okay. We will give you a call back up.
MR. KOEHLER: Thank you.
THE CHAIRMAN: Thank you.
Is there anyone else here to speak on this issue?
AUDIENCE MEMBERS: (No response.)
THE CHAIRMAN: Okay. I will close the

public hearing and consider a motion.
COMMISSIONER EPSTEIN: Motion to deny COA-25-32760.
COMMISSIONER LOVE: Second.
THE CHAIRMAN: Any discussion?
COMMISSIONER MORGAN: I have a little bit of discussion -- or question.
Through the Chair -- well, actually -- through the Chair to Counsel, if there's another COA and this gets denied, is that going to hold that up? Like, is it connected at all for his building permit? It seems like they would be completely separate.
MS. LOPERA: Through the Chair to the Commission, I didn't catch what the other COA was, but --
COMMISSIONER MORGAN: It's for a renovation that they're planning for, and then this one was for the chimneys.
MS. LOPERA: Through the Chair to the Commission, my understanding, there is a citation on this that is pending and so that would preclude them from getting another COA approved, yeah, so you do need to dispose of this in some way, shape or form before they can

get another COA approved.
COMMISSIONER MORGAN: Okay. Thank you.
COMMISSIONER EPSTEIN: And I'll speak to -- through the Chair, I think that one of the defining features of this house from the streetscape was these two chimneys. And we're to look at this as if it hasn't happened. And if you were to come to us and ask me to take those two chimneys down without any sort of contributing information that they were falling apart or un- -- you know, not able to be repointed and made structurally sound, I would consider it.
But with the information that's at my -- that is here, just saying we want to take them down because they're already down, I don't think I could be able to allow you to do that.
COMMISSIONER LOVE: Through the Chair to the Commission, I would agree. It's a real shame and unfortunate that those chimneys were removed in my opinion.
THE CHAIRMAN: Yeah, I agree that I couldn't support removing those chimneys. And I know we are not responsible for the fix, per se, but I would love to see at least the one

that is more facing toward the public right-of-way rebuilt in some manner because it is such a prominent visual piece of the historic house, so I will be voting to deny.

COMMISSIONER EPSTEIN: Through the Chair, I'll just mention this just because Commissioner Hoff did say -- I would like to, if it's part of the arb- -- I don't know what the term is for when you guys decide what's going to happen.

I would like to see both of them brought back (microphone failure) because the specific sort of symmetry of this house, the design that's there, I think that it -- it had both of them there for a reason, and I'd -- I would like to see both of them brought back if that's -- if I can just get that on the meeting notes for when you decide how to move forward.

And again, I will say that I would have denied this from the very beginning without any -- without any proof that there was some danger to these collapsing. That would be the only way I would have ever looked at this.

THE CHAIRMAN: Any other discussion on this?

COMMISSION MEMBERS: (No response.)

THE CHAIRMAN: Okay. Well, there is a motion and a second. So all those in favor of denying COA-25-32760 per staff recommendation, say aye.

COMMISSION MEMBERS: Aye.

THE CHAIRMAN: Any opposed?

COMMISSION MEMBERS: (No response.)

THE CHAIRMAN: Okay. With that, we have denied COA-25-32760.

Thank you.

The next item on the agenda is COA-25-32215 at 1635 Hubbard Street. Any commissioners have ex parte to declare?

COMMISSION MEMBERS: (No response.)

THE CHAIRMAN: We will open the public hearing, and if the staff could please give your report.

MR. ARSENAULT: Thank you.

Through the Chair to the Commission, COA-25-32215, for the property located at 1635 Hubbard Street, is for alterations to a contributing historic structure which include already-conducted and partially completed work as well as proposed work.

The existing structure is a two-story frame vernacular style building characterized by its hipped roof with front dormer, its wood lap siding, its brick pier foundation, and its front door with side lights and transom.

The proposed alterations include the wholesale replacement of the siding by removing the existing fiber cement/asbestos shingles, which have already been removed, and covering the underlying wood lap siding with cementitious lap siding.

The work also proposes to conduct wholesale window replacement, removing historic and nonhistoric windows of varying conditions and replacing them with new vinyl windows.

The work proposes replacing the front door with a new door with side lights, to replace the rear door with a new Craftsman door, and to infill the existing second floor door opening.

The work also includes the construction of rear steps with a railing to the rear door. Finally, the application proposes to construct a new single-story porch with a shed roof.

The replacement of repairable historic doors, the installation of incompatible

street-visible doors, the addition of questionable and street-visible porch designs, the covering of historic siding, the replacement of repairable historic windows, and the installation of incompatible windows require review by the Jacksonville Historic Preservation Commission, and the proposed alterations include all of the above.

Staff conducted a site visit on April 15th, 2025, to examine the condition of the property and the proposed areas for alteration. Staff noted during the visit that the structure was cladded in asbestos or fiber cement shingles, did not have a front porch, was missing a rear door and siding on the rear enclosure, and that some of the window were nonhistoric and/or aluminum; however, most were historic wood windows. In areas where shingles were missing, the historic wood lap siding was visible.

At the time the stop work order was posted, the nonhistoric shingles had been removed from the structure, the first floor front window was covered, the rear door was replaced, rear steps and railing were installed

which are of an incompatible design, and the rear addition/porch enclosure had been covered.

The applicant proposes multiple alterations which are inconsistent with Code criteria/design guidelines, and they are as follows:

The wholesale replacement of windows. A majority of the windows, totaling 13 on the structure, are historic wood windows, while some, totaling two, particularly in the rear, are nonhistoric and/or have been replaced with noncompliant vinyl windows.

Staff identified that most of the historic windows appear to be within reasonable repair. Furthermore, the replacement product, vinyl, is not a recommended replacement material for historic wood windows that are beyond repair.

The covering of historic siding. The historic lap siding which has been exposed appears to be largely intact. There are minor areas where siding is missing, especially in the front and rear elevations. However, staff recommends repair and scattered replacement with matching wood siding rather than covering of the siding with cementitious lap boards.

The new porch addition. The proposed porch design is inconsistent with the structure's historic design and will result in a loss of historic and architectural features. The historic porch was a two-story open porch, and the new design is proposed to be as a single story, which will alter the first floor window to be a paired window and will enclose the historic second floor doorway.

Door replacement. While the staff does not have any objection to the proposed rear door which has already been installed, the replacement of the front door is inconsistent with the design guidelines. The existing front door appears to be within reasonable repair. Furthermore, the proposed replacement utilizes decorative etched glass which is not a compatible design.

Finally, the construction of rear steps and railing. Staff does not object to the construction of rear steps as there was no means of accessing the rear entry door prior. However, the railing design that was constructed features spindles that are applied to the inside of the upper and lower rails with

expose ends.

As such, we forward to you a recommendation for denial.

THE CHAIRMAN: Thank you.

Any questions for staff at this time?

COMMISSIONER EPSTEIN: Through the Chair to staff, just -- I'm trying to quantify what has been done and what hasn't, what's being asked to be done, and it sounds like to me that the siding has been removed and some of the windows have been removed and the back door has been installed?

MR. ARSENAULT: Through the Chair to Commissioner Epstein and the Commission as a whole, so the work that has already been conducted -- the rear steps were constructed with the railing, the rear door was replaced, and then the siding -- the asbestos shingle or fiber cement shingles were removed, and currently it's just exposed wood lap siding. That's the extent of work that has been conducted.

THE CHAIRMAN: Any other questions for staff at this time?

COMMISSION MEMBERS: (No response.)

THE CHAIRMAN: Okay. Is the applicant here?

AUDIENCE MEMBER: (Indicating.)

THE CHAIRMAN: If you could come forward, state your name, address, and submit a speaker's card, and be sworn in.

(Audience member approaches the podium.)

AUDIENCE MEMBER: Vitaly Tikhonov, 1635 Arbor Street [sic], Jacksonville, Florida 32206.

THE REPORTER: I am going to swear you in, if you would raise your right hand for me, please.

MR. TIKHONOV: (Complies.)

THE REPORTER: Do you affirm that the testimony you are about to give will be the truth, the whole truth, and nothing but the truth?

MR. TIKHONOV: Yes.

THE REPORTER: Thank you.

MR. TIKHONOV: I came on the project, but the siding was already removed. And I came in to replace the windows, and that's when we filed the application. So I talked to Caleb -- and I just wanted to see if we could replace

the window as -- the same as the neighbor. I got pictures of it, I got specs, and they just did the house about -- probably within the last half a year. If we can get approval on the same windows and adding the porch to the front of the house.

THE CHAIRMAN: Okay. If we have any -- are there any questions for the applicant at this time?

COMMISSIONER EPSTEIN: Through the Chair to the applicant, you did not remove the asbestos --

MR. TIKHONOV: I did not, no.

COMMISSIONER EPSTEIN: Okay. So --

MR. ARSENAULT: Through the Chair to the Commission, when staff conducted the site visit in April, the building appeared as it does in this picture with the asbestos shingles. And then by the time a citation was issued, this is what it appeared as. So the siding was replaced during the work of this application.

COMMISSIONER EPSTEIN: Through the Chair to the applicant, are you the owner?

MR. TIKHONOV: No, I'm the contractor.

COMMISSIONER EPSTEIN: You're the

contractor?

MR. TIKHONOV: But I did not touch the siding or anything. I came in there, we replaced the roof on that place, and then we scheduled Caleb, we had a visit. I guess the owner, whoever was at -- they probably hired somebody to remove the siding. I had nothing to do with the siding.

COMMISSIONER EPSTEIN: Okay. So through the Chair to the applicant, we still will have to review that even though you did not do that work. That will still be part of what will have to be approved.

COMMISSIONER MORGAN: Just while you're here, through the Chair to the applicant, do we have the specs on those windows? I didn't see it. I might have missed it, but we may not have enough information to even review this.

MR. TIKHONOV: When I submitted, I didn't have it, but I sent it to Caleb today. I mean, I got the picture of the house next door, the -- I got the same window quoted by a company. I can show you the specifications and the pictures of it.

COMMISSIONER MORGAN: That's okay.

Have you been here for the bulk of the meeting? Because the neighbors --

MR. TIKHONOV: Yeah.

COMMISSIONER MORGAN: -- doing --

MR. TIKHONOV: Yeah, I seen the whole window ...

COMMISSIONER MORGAN: No, that's okay. No, this is the appropriate process to look at those. We just have to know what we're looking at.

COMMISSIONER EPSTEIN: So yeah -- so through the Chair to Commissioner Morgan, I believe Page 602 has the poly- -- the Ply Gem, white, aluminum, single-hung window.

MR. TIKHONOV: No, it -- it's a Simonton window. I just sent him an email. I don't know if you can pull it up or not.

COMMISSIONER EPSTEIN: What's in -- what I have seen in the book is a Ply Gem, 400 series, white, aluminum, single-hung window.

MR. TIKHONOV: It's a 550 [sic] reflections [sic] double-hung window by Simonton. The neighbor next door have the same window. I mean, it looks -- it's just the window trim stays the same. It just gets

replaced from the -- (inaudible) replaced the window.

COMMISSIONER EPSTEIN: Yeah, I'm not sure why we have a different window in the packet than what you're saying. That's -- unless I'm missing another -- and then what's on --

MR. TIKHONOV: No, that's not the window. No. My apologies.

COMMISSIONER EPSTEIN: Well, I can't -- I need that information about the window. I can't give you a definitive on whether we would approve it or not without -- and you were here for the majority, so you know everything --

MR. TIKHONOV: Yeah, I seen the whole window --

(Simultaneous speaking.)

COMMISSIONER EPSTEIN: -- (inaudible) about the vinyl windows.

We need to know the bottom rail size, the top rail size, you know, the frame that goes around it, what that's going to look like and everything. So there's a lot of information -- even if we just had received this right here that's in our packet, there's a lot of information that still needs to be provided so

that we can review that correctly for a window replacement.

MR. TIKHONOV: Is there a way to check by the neighbor's house if I tell you the address, what kind of windows he installed? Because it's the same window.

COMMISSIONER EPSTEIN: I mean -- through the Chair to staff, I don't know if you want to look up -- I don't know if you even have a way to look up right now what the -- if the neighbor even received a COA for their --

MR. TIKHONOV: It's been done in the last probably half a year.

COMMISSIONER EPSTEIN: So through the Chair to the applicant, that doesn't mean they got a COA, which -- you're kind of finding out too because there's work on this house that you're working on that started before and they didn't received a CO- -- so a lot of times people might try and do work without going through this process to try and -- not all the time, you know, ill intentions, but sometimes they don't know. And sometimes it slips through the cracks and there are windows that get removed from a house and they install new

windows that we might not approve.

So we can't just take the fact that the neighbor has windows in it, that, oh, okay, they have those windows, you can use those windows. We have to look at each property in its own -- you know, single property and what's going on with it.

THE CHAIRMAN: Any other questions for the applicant?

MR. TIKHONOV: How about on the porch part?

THE CHAIRMAN: So --

COMMISSIONER MORGAN: Through the Chair to the applicant, can you please specify what your scope of work is? Windows? What do we need to look at?

MR. TIKHONOV: Well, windows and front porch --

COMMISSIONER MORGAN: Okay.

MR. TIKHONOV: -- if we can get it approved as a one-story instead of a two-story porch because as of right now there's nothing there at all. It's just --

COMMISSIONER MORGAN: Were there drawings provided? I'm sorry, I'm not seeing any of

those --

MR. TIKHONOV: Yeah, it was submitted.

COMMISSIONER MORGAN: -- (inaudible).

THE CHAIRMAN: So the scope of work is on Page 507 of our packet.

COMMISSIONER EPSTEIN: There's a lot in this packet.

THE CHAIRMAN: Yeah.

COMMISSIONER MORGAN: There really is. It's slow to search.

THE CHAIRMAN: While we're looking at this, quick question for staff. The staff recommendation is to deny for the scope of work and it lists a few corrective actions that would apply to some of the proposed scope of work, but if -- if this COA was denied -- just for an example, the corrective actions don't mention anything about the windows, right? Or what they should do about the front porch. So if the current COA was denied, then they would need to speak with you about how to address their concerns with the windows and what type of front porch would -- would be a better fit in your opinion; is that correct?

MR. ARSENAULT: To the Chair -- through

the Chair, to the Chair and the Commission, so our corrective actions reflect work that has already been completed. So the first two address the siding. Because the wood siding is still in place and we wouldn't recommend putting back an asbestos fiber cement shingle, we're recommending repair or scattered replacement, and those --

And then the third reference is the already conducted rear steps, to correct that so that the spindles are between the upper and lower rail rather than applied to the inside.

It does not address any proposed work.

THE CHAIRMAN: Okay.

MR. WELLS: Through the Chair to the Commission, I did want to pull up the applicant's email or the revised window product. We did receive this information today at 2 o'clock, so, of course, that was after the meeting, hence why it wasn't included within the book.

So there are four attachments, and one makes reference to the window product information, along with some schematics.

MR. TIKHONOV: That's the picture from the

neighbor's house, tooken [sic] from the window of the other house.

THE CHAIRMAN: Any other questions for the applicant?

COMMISSION MEMBERS: (No response.)

THE CHAIRMAN: We will call you back up if we have additional questions.

MR. TIKHONOV: Okay.

THE CHAIRMAN: Is there anyone else here to speak on this application?

One person is walking up.

(Ms. Pryor approaches the podium.)

MS. PRYOR: Kim Pryor, 245 West 5th Street.

(Raises right hand.)

THE REPORTER: Do you affirm that the testimony you are about to give will be the truth, the whole truth, and nothing but the truth?

MS. PRYOR: I do.

THE REPORTER: Thank you.

MS. PRYOR: A couple of things. First off, thank you for removing the cementitious siding. Let's preserve the historic wood -- original wood siding underneath.

Second, the front porches were taken, I believe, by the City of Jacksonville through Municipal Code abatement. I remember when they came through and did that.

If you -- I saw that you pulled up some Google maps earlier on this. If you'll go back to 2019, you will see between March -- March, I believe, of 2019, the porches were there. And in September of 2019, they were gone. It was a two-story porch with beautiful Doric columns, and I believe that those -- the porch, as it was originally built, should be restored. It should not be allowed to be just a single-story porch.

Once you do that, you also have to address the door that is on the up- -- upper level, so that door would then go away. So it makes sense that she was originally built with a two-story porch, and that two-story porch needs to go back.

And last, but certainly not least, is the windows. As indicated by the staff report, the majority of those windows are original, and most certainly, as I've stated before, can be restored, and so I would urge you to require

that they do restore those windows as well.

Thank you.

THE CHAIRMAN: Thank you very much.

Is there anyone else here to speak on this application?

AUDIENCE MEMBERS: (No response.)

THE CHAIRMAN: Seeing none, I'm going to close the public hearing and consider a motion.

COMMISSIONER EPSTEIN: Motion to deny COA-25-32215.

COMMISSIONER MORGAN: Second.

THE CHAIRMAN: Okay. Any discussion?

COMMISSIONER EPSTEIN: Through the Chair, I think, just kind of starting off -- and maybe staff can let me know if I've got anything wrong or I've skipped over anything, but I think siding -- I think the siding needs to -- we need to, on that back portion, go back with a similar siding that was removed from the photos and, you know, no cementitious siding be allowed.

If there is siding that needs to be replaced within the overall body of the rest of the house, then it's a like for like, because I don't think that there's a whole siding

replacement, from what I can see, that can be done based off of the information we have.

Because I think this is a little different, we're talking about using a vinyl window and we have a window survey that tells us that these are historic original windows -- and I believe as we learned earlier in this commission, vinyl is not an acceptable window replacement when you have a historic window in the structure. I believe that's what the consensus was earlier in the meeting.

As far as the front door, I think if -- you know, if it is something that can be repaired, it should be. If we have historical evidence that there was two porches here, I think we have to go back to the two porches, which would mean that there would be no door infill on the second floor.

I think I'm fine with the steps in the back, of the door in the back. I think I -- I think I have everything. If I left anything off, let me know.

COMMISSIONER MORGAN: To the Chair, I'm in alignment with all of those comments. I think that I agree with the staff's recommendation to

just deny the COA.

THE CHAIRMAN: Any other thoughts or discussion on this?

COMMISSION MEMBERS: (No response.)

THE CHAIRMAN: Just to be clear, to staff, so if this COA is denied, the corrective actions would be what they would need to do to address those three issues?

MR. WELLS: Through the Chair -- or to the Chair, that's correct. So the three conditions that we have outlined in the staff report, those corrective actions, I should say, would -- those are the things we would require the applicant to initiate.

THE CHAIRMAN: Okay.

Yes.

COMMISSIONER MORGAN: To the Chair, I just -- I'm thinking about this again. I don't -- is it going to prevent any permits for stabilizing? Because it's kind of torn -- like, there's some other -- that's the only thing I'm wondering about, is if we could defer it -- if we need to defer it versus deny it so that they could get something done. I didn't -- I don't know if that's an issue.

THE CHAIRMAN: Does staff have thoughts on that?

COMMISSIONER MORGAN: Or, like, pull out some of it because they're not going to be able -- if they have to wait a year if it's denied, they're not going to be able to do anything. And if it's to stabilize, that's going to be detrimental to the building.

MR. WELLS: Through the Chair to Commissioner Morgan, they would be able to stabilize it because, I mean, this is an active violation, so they need to cure the violation.

COMMISSIONER MORGAN: Okay.

MR. WELLS: And because the work stems from them doing after-the-fact replacement, they could -- we could employ the corrective actions without compromising any structural deficiencies or whatnot, so that wouldn't hold up any progress in that regard.

I hope that answers your question.

COMMISSIONER MORGAN: It absolutely did.

Thank you.

COMMISSIONER EPSTEIN: And through the Chair to staff, maybe I missed something. They would be able to come back to us with a COA

request that, you know, had a proper window for replacement where they needed window replacement; is that -- if they amend the COA to be more in line with what's requested, they can because that's enough of a difference of a COA, correct?

MS. LOPERA: Through the Chair to Commissioner Epstein, yes. They just can't come back with an identical request and ask for the exact same thing within a year.

COMMISSIONER EPSTEIN: Okay.

MS. LOPERA: But if it's a different product, that's fine.

COMMISSIONER MORGAN: That makes it a lot easier to just -- yeah.

THE CHAIRMAN: All right. Any other discussion on this item?

COMMISSION MEMBERS: (No response.)

THE CHAIRMAN: Okay. We have a motion and a second to deny COA-25-32215.

All in favor?

COMMISSION MEMBERS: Aye.

THE CHAIRMAN: Any opposed?

COMMISSION MEMBERS: (No response.)

THE CHAIRMAN: Okay. So with that action,

we have denied 25-32215.

All right. Next on the agenda is a minor modification to a previously approved COA, MMA-25-32776, for 2817 Selma Street.

Does any commissioner have ex parte discussion or -- on this, has had ex parte discussion?

COMMISSION MEMBERS: (No response.)

THE CHAIRMAN: No? Okay. I will open the public hearing and hear a staff report.

MR. ARSENAULT: Thank you.

And if the Commission will just give me a moment, I'm going to pass out a new site plan that the applicant provided just the other day.

All right. So MMA-25-32776, for the property located at 2817 Selma Street, seeks to alter the scope of work for a previously approved COA, which was COA-25-31904, including site work at a contributing property within the Riverside Avondale Historic District.

Located on an interior lot, the subject property contains a two-story structure characterized by its hipped roof, two entry doors, and 4-over-1 sash windows. The property does not have an existing curb-cut; however, it

is adjacent to a largely unimproved alleyway that has an existing curb-cut and poured concrete apron.

The applicant proposes to install a concrete ribbon driveway on the left side of the structure with a new curb-cut. Additionally, they propose to alter the location of previously approved fencing and to add a 4-foot-tall wooden fence along the front of the property as indicated on the site plan.

The historic district design guidelines section on setting iterates that streetscape features are highly significant components of Avondale and Riverside and that new curb-cuts, driveways, and parking on the street side of residences should be avoided unless such features were associated historically with a block or surrounding buildings. In such instances, driveways with poured concrete ribbons or gravel are most appropriate. Asphalt or pebble surface concrete should be avoided.

The subject property did not historically, nor does it currently, have a curb-cut. Furthermore, adjacent to the subject property,

on the right side facing the front, is an existing curb-cut and concrete apron of the alleyway that runs parallel to the right side of the property.

The creation of a new curb-cut and driveway for the subject property is inappropriate and inconsistent with the design guidelines and Ordinance Code criteria.

The design guidelines reference Standard 2 of the Secretary of the Interior Standards for Rehabilitation. Standard 2 refers to the historic character of a property being retained and preserved amid the alteration of features and spaces which characterize it.

The proposed driveway is inconsistent with the location of historic driveways in Riverside. And recommendation number 3 encourages new driveways to be located only in areas where they existed historically.

There's no record of a driveway at the subject property, and staff therefore recommends that the applicant utilizes the existing alleyway to park in the rear of the property; and depending on the design, location, and materials, recommends that a rear

parking pad be installed instead.

The applicant stated during a phone call on August 14th that they are amenable to both reducing the width of the proposed driveway to 10 feet and to using concrete ribbons instead of solid poured concrete.

Staff does not have any objections to the 10-foot width or the concrete ribbon materials but objects to the proposed new curb-cut based on the above criteria and the location of the proposed driveway.

The proposed alterations to the fencing are compatible with the Ordinance Code criteria and fencing and design -- wall design guidelines. As such, the proposed changes to the fencing location and design qualify for administrative review.

As such, we forward to you a recommendation for denial.

THE CHAIRMAN: Thank you.

Any questions for staff at this time?

COMMISSION MEMBERS: (No response.)

THE CHAIRMAN: All right. Is the applicant here?

AUDIENCE MEMBER: Yes.

THE CHAIRMAN: Please come up, state your name and address, and be sworn in. And please submit the speaker card as well.

AUDIENCE MEMBER: These yellow cards -- attorneys don't have to swear in. It should maybe be flipped. I'm kidding. I'm just kidding.

THE CHAIRMAN: Okay.

AUDIENCE MEMBER: No, it just says we're not supposed to be sworn in.

MS. LOPERA: You don't have to be sworn in, but you do need to submit a speaker's card.

AUDIENCE MEMBER: I was just kidding.

Maybe the attorneys that get sworn in -- I'm just kidding.

Good afternoon.

My name is Meghan Edwards. I represent the Tides Group regarding this particular property. We do have the PowerPoint that you see up there. I also have additional copies if anybody needs that.

As Caleb stated, this is a -- you can see the proposed site plan. As he also stated, this property does not come with a curb-cut. It never did. The only curb-cut that's

available is directly leading up to the alley that is also not the property owner's as well.

Even with that being said, he was still determining if we can make this work. The issue that we're having -- and if we keep going through the slide show, you'll -- or the PowerPoint, excuse me -- you'll be able to see it.

But within there -- again, as Caleb stated, we are good with doing the driveway ribbons in lieu of a full driveway. The ribbons will be reduced down to 2 to 3 feet per -- wide per ribbon.

The issue with using that -- if we can keep going. Thank you.

So you'll see here -- if you can see it a little bit, but where that's dug up in that alleyway is actually some utility lines. Also, right in front of it -- you would have to really zoom in, but -- if you keep going, you'll be able to see a closer picture, but there is a plumbing drain there as well. It is not the property owner's. We don't know whose it is. So that is in the way of the alleyway as well.

All the way in the back, you can also see, if you keep going down -- and this is, again, along the southerly property line, looking north. You'll also be able to see -- again, there's brick structures that are -- we don't know who those belong to. They are on the alleyway, but they have not been maintained by the City. There's the plumbing clean-out.

And then if we keep going straight back, we'll see that there are stumps there as well. That is in the rear alleyway that runs east to west. And if we keep looking straight down and looking to the left, you'll see all the large trees that are also in the way of the alleyway in the very back.

Again, the current curb-cut -- this property does not have a curb-cut at all, never had a curb-cut, and is asking for it -- to be able to have one. It does not want to be disadvantaged by being -- sharing a property line with an alleyway. It would like to be able to have a driveway, so we're asking for that modification to that original COA.

THE CHAIRMAN: Any other questions for the applicant at this time?

COMMISSIONER MORGAN: Through the Chair to the applicant, so you're fine doing the ribbons and not a full driveway? You're asking for the curb cut-out?

MS. EDWARDS: Yes, ma'am.

COMMISSIONER MORGAN: Okay. Thank you.

COMMISSIONER EPSTEIN: Through the Chair to staff, slash, Counsel, if we approve curb-cuts, is there not some other part of the City that has to approve that modification to the curb as well?

MR. WELLS: Through the Chair to Commissioner Epstein, great question.

That is up to the discretion of the Development Services Division, so -- that's located within the Public Works Department. So they'll have to obtain a right-of-way permit because they're, essentially, you know, creating a new opening within the right-of-way.

So from my understanding, they wouldn't have any objection to it. It's just a matter of going through the process.

COMMISSIONER EPSTEIN: Through the Chair to staff, the applicant doesn't have an objection going through that process, you said,

or has -- has the right-of-way -- we are -- has anybody already asked the right-of-way planning -- I can't remember what you called it, I'm sorry.

MR. WELLS: Through the Chair to Commissioner Epstein, so from my understanding, the applicant doesn't have any objection to that. However, I don't think that conversation has actually materialized with the Development Services Division.

THE CHAIRMAN: Okay. Any other questions for the applicant at this time?

COMMISSION MEMBERS: (No response.)

THE CHAIRMAN: We will call you back up if needed.

MS. EDWARDS: All right. Thank you.

THE CHAIRMAN: All right. Is there anybody else here to speak on this application?

AUDIENCE MEMBERS: (No response.)

THE CHAIRMAN: Hearing none, I will close the public hearing and entertain a motion.

COMMISSIONER EPSTEIN: I'm going to throw some gasoline on this fire. I'm going to motion to approve MMA-25-32776.

COMMISSIONER MORGAN: Second.

THE CHAIRMAN: Let's have a discussion about it.

COMMISSIONER EPSTEIN: I'll start just -- since I changed what staff here is recommending. I think there's enough utilities in that alleyway that are not maintained by the owner of this house that could possibly cause issues for them continually driving over that area, that I -- I would prefer we offer them a solution that is safer for the utilities involved and themselves involved, especially since it seems like it's not maintained by the City, with exposed utilities.

I wouldn't want to leave it up to the applicant for that to be handled by themselves, to have a spot to drive to their -- their own home.

COMMISSIONER MORGAN: Through the Chair to staff, I guess I'm just asking on the denial, was it because -- it was the driveway and not the curb-cuts? And does this change anything on the staff's recommendation?

MR. WELLS: Through the Chair to Commissioner Morgan, so it was both, the driveway and the curb-cut. Our guidelines do

not -- they don't recommend installation of new curb-cuts.

In terms of the driveway, because their initial request was for poured concrete, that's also in direct conflict with it.

And we did mention this in our analysis. I mean, the ribbon -- concrete ribbons are more in spirit with the guidelines. Again, it just boils down to the -- the curb-cut.

MS. LOPERA: Through the Chair to the Commission, I need to clarify something.

So, Commissioner Epstein, you made a motion to approve, which -- without any conditions, so that would mean an approval of what they asked for in their application.

COMMISSIONER EPSTEIN: Oh, I'm sorry.

Then I would like to withdraw that -- or modify it, then.

I would like to make a motion to modify my previous motion. I would like to make a motion to approve with the ribbons that were given to us on the handout at our meeting today.

MS. LOPERA: So --

COMMISSIONER EPSTEIN: What's the date on this? Oh, there is a date.

COMMISSIONER MORGAN: There's a date, but it's pretty --

COMMISSIONER EPSTEIN: It's in the future.

MR. ARSENAULT: Through the Chair to the Commission --

MS. LOPERA: Through the Chair, I was going to reference the site plan dated 10/9/25, but --

COMMISSIONER EPSTEIN: Are there Lotto numbers on it?

MR. ARSENAULT: Through the Chair to the Commission, I also want to --

MS. LOPERA: So you -- as depicted on the applicant's site plan --

COMMISSIONER EPSTEIN: Yes, the applicant's site plan.

MS. LOPERA: I'll reference this as an exhibit.

COMMISSIONER EPSTEIN: Yes, the exhibit from the meeting right now, today, which -- I don't know what today's date is.

THE CHAIRMAN: The 24th.

COMMISSIONER EPSTEIN: It's some time in September, though. It's not October.

MR. ARSENAULT: Through the Chair to the

Commission, I also want to note that it doesn't look like the current site plan that was presented has the location of the fencing on it, so that -- might want to be something to consider in the condition.

COMMISSIONER EPSTEIN: Everything is so complicated.

THE CHAIRMAN: So question for staff. You said that this does not have the position of the (microphone failure)?

(Reporter inquiry.)

THE CHAIRMAN: Sorry.

To staff, you said that the site plan presented here doesn't have the position of the fencing?

MR. ARSENAULT: It doesn't appear to show the proposed fencing changes.

THE CHAIRMAN: Okay.

COMMISSIONER EPSTEIN: It has the fence at the street line; is that right?

MR. ARSENAULT: I believe the applicant was interested in pushing the 6-foot fence that was previously approved further back to accommodate the new driveway, in addition to adding the new 4-foot front fence.

THE CHAIRMAN: Okay. So I think those are on here.

MR. ARSENAULT: Are they?

THE CHAIRMAN: I believe. It doesn't show the style of the fencing, but it does have an indicator of --

MR. ARSENAULT: Okay. If we could -- the main thing is just to clarify where the break between the 4-foot and the 6-foot fence is on the right side --

THE CHAIRMAN: On the --

MR. ARSENAULT: -- to ensure it's in front of the wall plane.

COMMISSIONER EPSTEIN: Yeah, so we need --

Okay. Can I start over? Can I withdraw my motion entirely and create a new motion?

MS. LOPERA: Sure, with consensus of the body, if you will all affirmatively nod your heads to withdraw --

COMMISSION MEMBERS: (Nod heads.)

(Simultaneous speaking.)

MS. LOPERA: -- agreement to withdraw, and we can start over with a fresh motion.

COMMISSIONER EPSTEIN: All right. I would like to make a motion to approve MMA-25-32776,

citing the example site plan that was given to us today showing the ribbon driveway, and adding a clarification that the 4-foot fence at the front of the house transition to the 6-foot fence at the base of the residence, and that the fencing material be approved by staff administratively, if it is able to because there is no fencing material in this packet.

MS. LOPERA: All right. So there was a motion to approve with three conditions.

Is there a second?

COMMISSIONER MORGAN: Second.

MS. LOPERA: Wonderful.

COMMISSIONER EPSTEIN: Do we need to add a condition that the -- they be allowed to add these curb-cuts pending the City approving that or is that just -- is that implied?

MS. LOPERA: Through the Chair to Commissioner Epstein, to your question, I would say that if they go to Development Services with this and they are not approved, they could apply for a minor modification of their final order.

COMMISSIONER EPSTEIN: Okay.

THE CHAIRMAN: Any discussion on the new

motion?

COMMISSIONER MORGAN: Through the Chair, I'm (microphone failure).

THE CHAIRMAN: Okay. So I'll throw in my discussion here.

Typically, I would not support this. Adding curb-cuts to our historic, walkable streets are not ideal, and this property does have a great advantage of being adjacent to an alleyway, which many, many people use alleys to access the rear of their properties in lieu of having to dedicate some of their property to a driveway.

So I generally wouldn't support this. However, there is good evidence that there are utilities actually sticking out of the ground in that same area, so I understand that concern.

So I will vote yes on the motion.

Any other thoughts before we --

COMMISSIONER MORGAN: To the Chair, I'll just add to that. Generally, I would say no as well, but it -- there are other curb-cuts, there's other aprons, and it -- it makes the most sense. The utilities and the alley make

it inaccessible.

THE CHAIRMAN: Okay. There's a motion and second.

So all in favor?

COMMISSION MEMBERS: Aye.

THE CHAIRMAN: Any opposed?

COMMISSION MEMBERS: (No response.)

THE CHAIRMAN: Okay. So with that, the minor modification 25-32776 has been approved with conditions.

Okay. It's time to open up for public comment. Anybody here to talk from the public?

(Discussion held off microphone.)

THE CHAIRMAN: Anybody here to talk from the public? We are opening up for public comment at this time.

MS. PRYOR: Only if you're not going to allow comments about your Bungalow Court letter.

THE CHAIRMAN: Well, that's the next thing up on the list, so why don't you just come on up and talk about that?

(Ms. Pryor approaches the podium.)

MS. PRYOR: Thank you.

Kim Pryor, 245 West 5th.

The owner of the historic Oneida Bungalow Court is not able to be here today. He wasn't aware that this was going to be on the agenda. And since I told him I was going to be here, he asked if I would represent him and answer any questions that the Commission may have in the request for the letter of support.

So I don't know if any of you are familiar with the Oneida Bungalow Court or not, but it is the -- one of the largest concentrations of historic bungalows in Jacksonville. It is akin to the 24 bungalows that are on Dancy Terrace in Springfield.

Originally, there were 29 bungalows. We've lost five to fire over the years. But this particular concentration is in West Lewisville, which was initially just -- it was a thriving African-American community, especially after the emancipation. And then when the interstate came through, it decimated the community. It divided the white neighborhoods from the black neighborhoods. And, unfortunately, West Lewisville just fell into disrepair.

Mr. Fletcher -- Bungalow Court has been

listed on the State of Florida's 11 to Save. It was recently -- announced that in May. And he is also working on a nomination for the national 11 to Save. So this particular Bungalow Court is absolutely worthy of saving. There are 24 of the original 29 bungalows left.

The arrangement of the structures has not changed since it was originally platted. There are rows of houses that face each other, and it -- the eaves almost touch, the way that they were built.

We have members of the community that have spoken up in favor of saving this, people who grew up there. So they're -- they're very excited about that.

So I'm happy to answer -- or attempt to answer any questions that you may have, but I do hope that you agree to write a letter of support for him.

Thank you.

THE CHAIRMAN: Thank you.

Any other public comments at this time?

AUDIENCE MEMBERS: (No response.)

THE CHAIRMAN: We're going to close the public comment and move on to the next order of

business, which is New Business. Number 1 is -- actually, I'm just going to hand this off to Mr. Wells.

MR. WELLS: All right. Thank you.

So through the Chair to the Commission, this item was scheduled to take place today, but we are deferring it one cycle. We are working with the property owner to assemble a letter of report [sic] that makes sense. They're also pursuing a National Register nomination, so that letter of support will be coming again in a few months, so we'll have more to update you on next month.

THE CHAIRMAN: Okay. So we are not going to hear that now; we will discuss that next month?

MR. WELLS: That's correct.

THE CHAIRMAN: Okay.

MR. WELLS: All right. So next up, three road -- or street renamings. The first one is Confederate Street to Rose Arbor Way. This is in accordance with Chapter 745 of the Ordinance Code.

So, Commissioners, you may remember this one from a couple -- or even last year or a

couple of years ago. There was a proposed renaming of Confederate Street. There is a slight typo on the staff report because this road renaming has changed a few times, but it should be from Confederate Street to Rose Arbor Way again.

So we evaluated the proposed renaming in accordance with six of the criteria outlined in Chapter 745. This road renaming seeks to build anticipation for the planned relocation of the downtown Ecumenical Services Council to an abutting parcel along the subject street and to recognize the rose arbor in the abutting Springfield Park.

Based on staff's analysis, we found that this street was originally named Park Terrace, and then in 19- -- or 1898, Park Terrace was renamed to Confederate Street Park. While it cannot be determined by staff, it is widely speculated that Park Terrace was renamed to Confederate Street due to its proximity to Confederate Park.

And while several historic structures currently have frontage along this portion of the subject street, none of the structures have

addresses on Confederate Street. We also found that it's not part of a common theme of street names in the area, nor is it a duplicate street name.

Based on the best evidence available, the Department does not have any objection to the proposed street name change from Confederate Street to Rose Arbor Way as depicted on the location map.

THE CHAIRMAN: Okay. Any questions for staff at this time regarding this renaming?

COMMISSIONER MORGAN: Through the Chair to the staff, who's the committee? Is it a COJ committee or is it someone else recommending this change coming to us? I'm just curious.

MR. WELLS: Through the Chair to Commissioner Morgan, if I -- if you may, I would like the applicant to come up and speak on --

COMMISSIONER MORGAN: Oh, wonderful. Okay.

(Ms. Trimmer approaches the podium.)

MS. TRIMMER: Thank you so much.

Cyndy Trimmer, 1 Independent Drive, Suite 1200, on behalf of the applicant.

Happy to hang out with everybody this afternoon.

I am working with both the property owner and an incoming tenant. Downtown Ecumenical Services is moving to the property that's at the corner on this site. They reached out to me after the last attempt to rename Confederate Street was not successful. We confirmed with OGC and staff that it was okay to bring forth another application with a completely different name.

We worked with Councilman Peluso and Springfield Preservation to come up with a list of names that would be acceptable to SPAR, took that to the property owner, and the Rose Arbor Way name was chosen.

So Confederate Street was kind of a residual -- when it was Confederate Park. Confederate Park was renamed in 2020. The road name still stands. The rose arbor is actually a historically significant element to the adjacent park dating back to the '20s. There was a beautiful rose arbor, and then early 2016 -- don't quote me -- a group of folks worked really hard to bring that arbor back to

its glory. And it really is one of the gems of that park.

So SPAR and the property owner felt that renaming to this would help draw attention to that gem of the park and then also be consistent with the goals for the renaming as a whole of Confederate.

So we would really appreciate your support, happy to answer any additional questions.

COMMISSIONER EPSTEIN: Through the Chair to staff or the applicant, I cannot recall if the name that was proposed previously was the reason that they decided not to rename it or because of the historical significance of the name that it is now. Does anybody have any --

MS. TRIMMER: I do. I sat through the hearings.

So through the Chair, the prior name that was proposed was to honor Ben Frazier after his passing, and that ended up being kind of polarizing when it got to Council, and they weren't comfortable proceeding because of the name that was chosen, not the principle of renaming the road.

COMMISSIONER EPSTEIN: Okay. Thank you.

That's what I thought, but I was making sure I was remembering correctly.

THE CHAIRMAN: Any other questions?

My microphone has died.

Any other questions for the applicant at this time?

COMMISSION MEMBERS: (No response.)

THE CHAIRMAN: Okay.

MS. TRIMMER: It said three hours was enough; you're done.

THE CHAIRMAN: Yeah.

Okay. Do we hear a motion?

COMMISSIONER EPSTEIN: I'm sorry, I just have a question.

THE CHAIRMAN: Okay.

COMMISSIONER EPSTEIN: I'm just trying to get as much information on the record for this as we can so that when it goes to Council that they see everything that's --

I cannot recall for these road renamings -- if I make a motion, we just vote on it, or do we have a chance to speak after the fact, after the motion?

MS. LOPERA: Through the Chair to

Commissioner Epstein, the proper procedure is to make a motion to recommend approval of or denial of the proposed road renaming, and then to entertain discussion, at the Chair's --

COMMISSIONER EPSTEIN: I feel like sometimes we make a motion and then that's it, so I just want to make sure --

So I will make a motion to approve the road renaming of Confederate Street to Rose Arbor Way.

COMMISSIONER MORGAN: Second.

THE CHAIRMAN: Any discussion?

COMMISSIONER EPSTEIN: Through the Chair, I think that this is very appropriate, especially with the evidence that was given for how this was originally named -- this was originally named for the park. That park has been renamed. I believe that it is completely appropriate to continue to honor that park, to have picked an element that is a feature and is something that has been restored over time and is significant to that, so I really love that we are looking at renaming this and maintaining the historical timeline of how it was originally named for the park. We're doing it

again; we're renaming it for something in the park, the -- Rose Arbor Way, so I would hope that this can be something that can be achieved.

THE CHAIRMAN: Okay. Anyone else?

COMMISSIONER MORGAN: Through the Chair to the applicant, thank you for your hard work on this; it's important. I'm excited to vote on this.

THE CHAIRMAN: Okay. All in favor?

COMMISSION MEMBERS: Aye.

THE CHAIRMAN: Any opposed?

COMMISSION MEMBERS: (No response.)

THE CHAIRMAN: Okay. With that, we are recommending the street renaming from Confederate Street to Rose Arbor Way.

Next up on the agenda are two more renamings.

MR. WELLS: Thank you.

So this one is a request to rename Fingerlake Street to Fairgounds Way. The reason for this change is to also build anticipation for the planned relocation of the Jacksonville Fairgrounds to an abutting parcel along the subject street.

So based on staff's analysis, we found that Fingerlake Street was constructed in 2003 under the Better Jacksonville Plan. It was never platted but was constructed by the City of Jacksonville. We did find that no historic structures or landmarks are currently located along this portion of the subject street and it's not part of a common theme of street names in the area, nor is it a duplicate street name.

So based on our analysis, the Department does not have any objection to the proposed street name change from Fingerlake Street to Fairgounds Way, and we forward to you a recommendation for approval.

THE CHAIRMAN: Any questions for staff at this time?

COMMISSION MEMBERS: (No response.)

THE CHAIRMAN: Is there anybody here to speak on that issue?

AUDIENCE MEMBERS: (No response.)

THE CHAIRMAN: No.

Any conversation?

COMMISSION MEMBERS: (No response.)

THE CHAIRMAN: No? Okay. I'll entertain a motion.

COMMISSIONER EPSTEIN: Motion to approve street renaming of Fingerlake Street to Fairgrounds Way.

COMMISSIONER LOVE: Second.

THE CHAIRMAN: Okay. Hearing no discussion about this, we'll call it to a vote.

All in favor?

COMMISSION MEMBERS: Aye.

THE CHAIRMAN: Any opposed?

COMMISSION MEMBERS: (No response.)

THE CHAIRMAN: None. Okay. With that, we have recommended renaming Fingerlake Street to Fairgrounds Way.

We have one more renaming to consider.

MR. WELLS: Okay. So this renaming is for Catherine Street to Henry Bradley Place. This name change is to facilitate coordination with the planned naming of the abutting City-owned firefighters museum as the Henry Bradley Firefighters Museum. As you may recall from our meeting -- it might have been two meetings ago, but Firefighter Bradley was the first City of Jacksonville firefighter to die in the line of duty.

Based on our analysis, we found that

Catherine Street can be traced back to its original plat of Jacksonville in June of 1822 where it served as the city's eastern boundary.

The subject street has ties to the Doggett family, which is known as one of the oldest and most prominent families in Jacksonville, and they were around in the 1820s and the 20th century. Their contributions stem from being involved in law, politics, philanthropy. One member in particular, who was known as John Locke Doggett, Sr., named Catherine Street after his daughter Catherine who died at an early age.

The request for the name change will apply to only a portion of Catherine Street as depicted on the location map.

We did find that there is a landmark located along this portion of the subject street, which is, again, the City-owned firefighters museum which was designated as a local landmark by City Council in 2011.

And as you may recall, too, the museum is currently closed for renovations in coordination with the Jacksonville Shipyards West project.

Legislation is currently underway to rename this museum after Henry Bradley. And, again, you all recommended approval of that renaming last month.

Based on our best evidence available, the Department does not have any objection to the proposed street name change, and we forward a recommendation of approval.

THE CHAIRMAN: All right. Any questions for staff?

COMMISSION MEMBERS: (No response.)

THE CHAIRMAN: Okay. Is anybody here to speak on this?

AUDIENCE MEMBERS: (No response.)

THE CHAIRMAN: No? Okay. Let's entertain a motion.

COMMISSIONER EPSTEIN: Motion to approve the street renaming of Catherine Street, as shown on the map, to Henry Bradley Place.

COMMISSIONER LOVE: Second.

THE CHAIRMAN: Any discussion on this?

COMMISSION MEMBERS: (No response.)

THE CHAIRMAN: I'll just say that, before we got to the map part, I was going to not be in favor --

COMMISSIONER EPSTEIN: Yes.

THE CHAIRMAN: -- but the map part was good clarity.

COMMISSIONER EPSTEIN: That's why I said it in my motion.

THE CHAIRMAN: Okay. All in favor?

COMMISSION MEMBERS: Aye.

THE CHAIRMAN: Any opposed?

COMMISSION MEMBERS: (No response.)

THE CHAIRMAN: Okay. We have approved the recommendation of renaming Catherine Street to Henry Bradley Place.

Next on the agenda is information.

MR. WELLS: Okay. So for this one, this -- the next one is the 2026 JHPC planning. So this is just a broad disclaimer to the Commission that staff will initiate the planning of new calendar dates for next year as well as room reservations. And so if there's any suggestions from the Commission regarding that or even anything that could make you life a little bit easier, just let us know, but we will be working on that and have some proposed memos for you next month.

COMMISSIONER EPSTEIN: Through the Chair,

can we just not make it, like, right after lunch? Because, like, getting here and everything, I lose some lunch time. I've already -- you know, I hate to sound so selfish, but I have a two-and-a-half-year-old and sometimes my work lunches are the only time that I get to, like, sit quiet. So, I mean, just a little bit more of a buffer there at lunchtime.

MS. LOPERA: I mean, we -- through the Chair, we used to do them at 3:00 p.m. But if we had started this one at 3:00, we'd be at 7:09 p.m. And that was kind of the impetus for pushing it up a bit, so we could get out around 5:00 or 6:00.

COMMISSIONER EPSTEIN: Yeah, maybe 1:30 or 2:00, just a little -- 1:30 is a weird time to start a City meeting, no one will ever show up on time, so 2:00 is a -- kind of a middle ground.

(Discussion held off the record.)

MR. WELLS: Sorry. I thought you had a suggestion.

THE CHAIRMAN: No.

MR. WELLS: All right.

Okay. Next item is just the demo delay report. We don't have -- we haven't had any new submissions for demolitions, so nothing to report there.

After that is pending legislation. Really only one bill was -- final action was taken on. This was the local landmark of the Annie R. Morgan school, so 2025-0464 was withdrawn at the Land Use and Zoning Committee and ultimately withdrawn altogether at City Council.

And the last thing is notification of improvement projects. So there's two items I want to notify the Commission of. One is regarding a -- it's referred to as a small diameter pipe replacement program, and this is occurring across Willow Branch Street [sic], Oak Street, and Herschel Street. So anticipate a start date in 2026. They are looking to replace around 1,600 feet of the galvanized water mains with a new PVC water main.

And the second project, this will occur in Memorial Park. This is being done with the discretion of, I believe, the Parks and Recreation Department of the City. And so this

will -- anticipated to started in the fall of 2026, and there are some plans attached to it, but they're looking to replace some of the bulkheads there.

End of report.

THE CHAIRMAN: Okay. Anything else under information before we go to Old Business?

COMMISSIONER MORGAN: I don't know, it might be Old Business.

To the Chair, I just wanted to see, since our landmarking committee meeting was cancelled, if we're going to reschedule that.

COMMISSIONER EPSTEIN: Yes, I was going to bring that up.

COMMISSIONER MORGAN: Okay.

COMMISSIONER EPSTEIN: I'm sorry, I over-committed myself to that week, and it just -- it kind of got away from me and everything.

COMMISSIONER MORGAN: That's totally fine. I just don't --

COMMISSIONER EPSTEIN: So I would like to propose October 15th. It's, like, the Wednesday before our next Commission meeting, if that works for everybody.

COMMISSIONER MORGAN: In the afternoon?

COMMISSIONER EPSTEIN: Yes.

COMMISSIONER MORGAN: Okay.

MR. WELLS: Through the Chair to Commissioner Epstein, were you planning to do the -- I think last time we discussed 3:00 p.m. to 4:30?

COMMISSIONER EPSTEIN: Yes, that's what I was thinking.

MR. WELLS: Okay.

COMMISSIONER EPSTEIN: I am good on that day, so -- I'm not sure if everybody else is and if the room is available, or a room.

MR. WELLS: All right. Through the Chair to Commissioner Epstein and to the Commission actually, that room -- well, this room is available during that time, so I'll send out a meeting invite shortly.

COMMISSIONER EPSTEIN: If that works for everybody, that's great, and I will do a better job next time.

THE CHAIRMAN: (Off microphone.)

A couple other items that could fall under Old Business or Information or --

(Reporter inquiry.)

THE CHAIRMAN: A couple of other items that could fall under Agenda Item M/N or -- so the Demo by Neglect Task Force follow-ups.

Municipal Code Compliance did provide a draft list of all the historic properties that are in violation and that have a fine. That needs to be refined a bit before it's widely usable, I think.

A rough draft matrix was also submitted to Municipal Code and Historic Preservation staff to revise as needed.

And we also previously spoke about using some of the money that is, at least hypothetically, allocated in the Historic Preservation Commission fund to pay for a mailer or a letter as was recommended in the task force report, so I volunteered to take a first initial crack at that and then give it to staff to improve upon.

So that's my update on that.

Two questions for staff, I guess. Last month you mentioned that the COA matrix would be undergoing some kind of an -- an update this fall-ish. Do you -- is that going to be put on the agenda ahead of time so people know of that

and can, you know, submit their thoughts if they'd like?

MR. WELLS: To the Chair, correct.

So as we've done in the past, we'll issue a draft review of the matrix in October, so that would be next month, and then we'll do a final draft review in November. So if -- any staff comments that are submitted to staff between that time frame, we'll try to address.

THE CHAIRMAN: Okay. Gotcha.

And one last question. This is Old Business. So I'm sure this is your favorite subject as well, REHAB funding. That -- could you give us a status update of where the REHAB program is?

There was, you know, several hundred thousands of dollars that were put in it, and then the process had to be kind of redone. So has that been used successfully yet? And if not, is that program open to applications?

MR. WELLS: To the Chair, great question.

So the -- we only open up for one cycle, and about $500,000 were earmarked -- or allocated to five applicants. At this time -- point in time, I believe contracts have been

signed, so they're initiating the work. We're just waiting for the work to officially -- I shouldn't even say "expire," but once they complete the work, just to kind of do a holistic review of the process entirely. That remains -- that means that roughly $200,000 are left in the pool.

So we're planning to open it up. We also wanted to see how the budget would unfold, just to see if additional money would be allocated, so -- but we do plan on opening it up once we get a better picture of how the current cycle is going.

THE CHAIRMAN: Okay. Those are all my questions.

Anything else?

COMMISSIONER EPSTEIN: Just one thing, through the Chair to staff, this has been brought up before. I know that the Historic Preservation Awards for the City of Jacksonville were sort of put to the side and the Joel McEachin Award was created, and -- where do we stand on if that has ever been awarded, or what's the --

Like, it feels like to me that there's

just been a lull in time between where we've ever acknowledged where good work is being done, and I think that's really important to what we do here as well, is to showcase work around the city that's being done well.

MR. WELLS: Through the Chair to Commissioner Epstein, that's certainly another great question.

I believe the last time we did the McEachin Awards, or any iteration of awards, was back in 2019 or 2018. So it's been a while. The conversation has come up. I know there's a lot of issues and concerns stemming from leadership in our department, just about bringing that back.

We wanted to bring it back, but I think some issues need to be ironed out regarding capacity for staff, capacity for the Commission, having interest from the Commission to review the nominations and so forth. So that is something on the docket for next year.

We do have new leadership in place for our department, but we want to, of course, bring something back that is manageable and doesn't exhaust ourselves in terms of capacity because

it has gotten to that point in the past where we were doing almost banquets and galas. So it's on the docket. I'd love some ideas offline, just to see if you had anything, but some type of iteration.

COMMISSIONER MORGAN: Arimus, the last one I was at, I think it was just in an auditorium in the library. It really was just an awards ceremony. I didn't get invited to the gala or banquet.

MR. WELLS: No, those used to occur back in the library and we would rent out a space, and we would pay money to rent out that space and have a whole award ceremony. So we're just looking to find ways that are productive and meaningful without, you know, compromising our capacity, of course.

COMMISSIONER EPSTEIN: The last one I went to was in 2017 and it was just, like, in an auditorium. It wasn't -- it wasn't fanciful things. That sounds great, sounds nice, but, I mean, I'm not even talking about that portion of it. I mean, even -- I'm talking about just like being able to showcase great work that people are doing, you know, at -- I don't know

the -- I don't know what encompasses the McEachin Award, but, you know, like, even residential work that people are doing to restore their homes, you know, even on a smaller scale.

And I'm not talking about doing a big banquet or something, maybe just, you know, letting people nominate themselves or other people and just being like, yeah, this is deserving of an award, and showcasing what's happening around the city, what's a good example of work that's being done.

COMMISSIONER MORGAN: I do have an idea to take some work off your plate. I've gotten good at that over the years, if the -- because I know the process before was the City nominated, City reviewed, City selected. What if we were to engage the public somehow or have people vote or have people submit things that's not just you guys combing through?

Because there's things that don't even come to us. I mean, if you're working on a project and getting federal tax dollars, it doesn't come through HPC, it's just approved. Those are really nice projects we want to see,

and they wouldn't even be picked up in that process.

So I -- I think there's ways to take it off your plate and engage some help first, for voting, or something that's not --

MR. WELLS: Yeah, and that's what we really need because I know in the past -- another issue was we weren't getting any nominations from the Commission and the public, so we were just self-nominating our own interests and --

COMMISSIONER EPSTEIN: So through the Chair, is there -- the AIA/State does something where it's like they have -- they have their big awards that -- but they have a people's choice that they do, and they have, like, a category for it every year.

And I don't know if there's a way for us to establish basic categories and people can nominate or we could nominate, and then just all those go out into the public, and -- you know, RAP can send it out, and the City can send it out. It can go on the City's website, "Keep Jacksonville cute, don't pollute," or something. I forget the slogan.

You know, something where it's not so much work for you guys, it's maybe just a web page that has votes on it, and it goes out to the public as a popular vote. And there's no gala or -- but, you know, maybe people get a certificate or something or they get the acknowledgment through social media that their project has been deemed by the public to be worthy of being, you know, recognized.

COMMISSIONER LOVE: That's a fine idea.

THE CHAIRMAN: I support this.

COMMISSIONER MORGAN: I really like it because I think it -- the public needs to be engaged.

COMMISSIONER EPSTEIN: I know.

COMMISSIONER MORGAN: If they're learning and excited about projects, they're going to start to under- -- you know what I mean? It's just more -- I'm just going to be honest. We're not great about it in this city. We don't get excited about --

COMMISSIONER EPSTEIN: It's the millennial in me that's like, let's give people awards, you know, but not participation awards, because they've got good stuff.

So I -- I think there's something there, and I would like to see the hard-working -- you know, hearing -- a guy came in here today and told us he rebuilt all the windows in his house over a five-year span of time. That man deserves something.

So that's all I'm going to say, is if we can come up with some streamlined way where it's not pomp and circumstance and people are, you know -- like, I would love to sit and drink wine and Old Fashions with you guys, but if we could just make it a little bit more about recognition and not throwing a ball, that, to me, is a great, wonderful way to get this back into motion.

THE CHAIRMAN: Okay. Well, it is 5:25.

Thank you, and I will call this meeting to end.

(The proceedings were concluded at 5:25 p.m.)

\- - -

CERTIFICATE OF REPORTER

STATE OF FLORIDA)
)
COUNTY OF DUVAL)

I, Diane M. Tropia, Florida Professional Reporter, certify that I was authorized to and did stenographically report the foregoing proceedings and that the transcript is a true and complete record of my stenographic notes.

DATED this 10th day of October 2025.

_____
Diane M. Tropia
Florida Professional Reporter

Diane M. Tropia, Inc.
Post Office Box 2575, Jacksonville, FL 32203
(904) 821-0500
MadamCourtReporter.com

$

$15,000 [1] - 55:5
$200,000 [1] - 206:6
$500,000 [1] - 205:23
$70,000 [3] - 61:14, 61:16, 61:21
$80,000 [1] - 55:6

'

'20s [1] - 190:22
'24 [2] - 120:23, 137:15
'60s [1] - 46:9
'70s [1] - 46:9

1

1 [9] - 4:25, 5:22, 36:7, 36:14, 73:25, 87:3, 139:21, 187:1, 189:24
1,600 [1] - 201:20
1-inch [1] - 49:11
1-over-1 [1] - 75:5
1.75 [1] - 37:14
1.9 [1] - 37:12
10 [8] - 78:8, 82:12, 86:24, 101:5, 133:6, 135:2, 137:20, 171:5
10-foot [2] - 135:3, 171:8
10-minute [1] - 112:6
10/9/25 [1] - 179:7
1002 [1] - 1:8
101 [1] - 4:25
10th [1] - 213:15
11 [3] - 85:19, 186:1, 186:4
12 [3] - 67:12, 133:7, 137:20
1200 [1] - 189:25
12598 [1] - 59:13
13 [2] - 79:19, 149:8
1375 [5] - 5:23, 112:14, 112:23, 117:4, 117:6
14 [2] - 79:19, 116:7
141 [3] - 5:24, 138:25, 139:10
1470 [2] - 5:1, 8:19
14th [1] - 171:3
15 [4] - 17:16, 24:6, 67:12, 82:12
1552 [3] - 5:9, 10:21, 13:9
15th [2] - 148:10, 202:23
16 [2] - 89:5, 133:20
16-foot [1] - 130:12
1635 [4] - 5:25, 146:13, 146:21, 152:8
17 [1] - 113:16
1717 [1] - 5:4
18 [1] - 130:6
1820 [2] - 88:24, 88:25
1820s [1] - 197:7
1822 [1] - 197:2
1840 [1] - 88:25
1898 [1] - 188:17
19 [3] - 77:22, 78:8, 188:17
1947 [4] - 118:20, 119:6, 119:12, 120:6
1:01 [3] - 1:7, 2:1, 2:8
1:30 [2] - 200:16, 200:17
1st [3] - 5:1, 119:25, 120:4

2

2 [6] - 5:17, 5:23, 160:19, 170:9, 170:11, 173:12
2.6 [1] - 37:24
20 [1] - 113:14
2003 [2] - 33:23, 195:2
2011 [1] - 197:21
2016 [1] - 190:24
2017 [1] - 208:19
2018 [1] - 207:11
2019 [4] - 162:7, 162:8, 162:9, 207:11
2020 [1] - 190:19
2021 [1] - 118:16
2024 [3] - 136:23, 136:25, 137:2
2025 [10] - 1:7, 2:1, 7:1, 7:4, 73:23, 116:7, 119:25, 136:25, 148:10, 213:15
2025-0464 [1] - 201:8
2026 [3] - 199:15, 201:19, 202:2
20th [1] - 197:7
21 [2] - 121:4, 121:7
214 [1] - 1:8
225 [1] - 106:10
2257 [4] - 5:17, 85:4, 85:14, 87:20
22nd [4] - 73:23, 108:17, 137:24, 138:19
24 [4] - 1:6, 2:1, 185:12, 186:6
244 [1] - 5:3
245 [3] - 56:15, 161:13, 184:25
24th [1] - 179:22
25 [1] - 45:21
25-32215 [1] - 168:1
25-32776 [1] - 184:9
27th [3] - 7:1, 7:4, 11:16
2817 [3] - 6:7, 168:4, 168:16
29 [2] - 185:14, 186:6
2:00 [2] - 200:17, 200:19
2nd [3] - 76:17, 77:1, 78:10

3

3 [8] - 5:2, 5:25, 26:16, 100:14, 100:23, 113:15, 170:17, 173:12
3-and-quarter [1] - 48:19
3/16 [1] - 105:15
3024 [3] - 5:16, 74:14, 78:25
307.106(k [1] - 139:20
32204 [1] - 87:21
32205 [1] - 117:5
32206 [1] - 152:10
32207 [1] - 16:10
32225 [1] - 13:10
32258 [1] - 140:23
35 [1] - 47:22
3:00 [3] - 200:11, 200:12, 203:6
3:21 [1] - 112:7
3:25 [1] - 112:10
3rd [4] - 77:6, 83:19, 83:24, 84:6

4

4 [4] - 5:3, 113:16, 130:6, 139:21
4-foot [4] - 80:14, 180:25, 181:9, 182:3
4-foot-tall [1] - 169:9
4-inch [1] - 48:4
4-over-1 [1] - 168:24
40 [1] - 105:12
400 [1] - 155:19
44 [1] - 86:10
4571 [1] - 16:9
4:30 [1] - 203:7

5

5 [1] - 5:4
50 [2] - 46:7, 51:5
507 [1] - 159:5
55 [2] - 16:9, 86:15
550 [1] - 155:21
5538 [1] - 140:21
5:00 [1] - 200:15
5:25 [2] - 212:16, 212:20
5th [5] - 5:3, 7:18, 56:15, 161:13, 184:25

6

6-foot [5] - 80:7, 80:15, 180:22, 181:9, 182:4
6-over-1 [1] - 75:5
60 [1] - 47:22
602 [1] - 155:13
6:00 [1] - 200:15

7

70 [1] - 89:6
72 [1] - 47:23
745 [2] - 187:22, 188:9
75 [1] - 55:5
751 [1] - 5:5
79 [1] - 10:1
7:09 [1] - 200:13
7th [3] - 5:24, 138:25, 139:10

8

8 [4] - 83:25, 85:21, 137:19, 137:20
80 [1] - 88:11
87 [2] - 88:11, 105:25

9

9 [7] - 78:8, 83:5, 83:6, 83:18, 83:21, 84:3, 135:1
90 [8] - 33:2, 86:23, 88:9, 88:13, 88:17, 106:5, 106:6, 109:1
913 [1] - 7:18

A

abatement [1] - 162:3
ability [2] - 89:10, 90:17
able [47] - 14:5, 14:10, 15:4, 16:1, 16:24, 17:16, 18:14, 30:3, 33:22, 35:8, 42:23, 49:6, 51:17, 53:18, 60:24, 64:20, 81:16, 83:8, 89:19, 89:20, 101:23, 102:19, 102:21, 102:24, 103:11, 103:12, 104:5, 109:10, 110:15, 125:9, 127:2, 135:16, 135:21, 144:11, 144:17, 166:5, 166:6, 166:10, 166:25, 173:7, 173:21, 174:4, 174:19, 174:22, 182:7, 185:2, 208:24
absolutely [4] - 136:8, 138:2, 166:21, 186:5
abutting [4] - 188:12, 188:13, 194:24, 196:18
accept [1] - 82:9
acceptable [3] - 84:18, 164:8, 190:14
accepted [1] - 67:4
access [3] - 74:25, 75:24, 183:11
accessed [1] - 75:23
accessibility [1] - 102:25
accessing [1] - 150:22
accessory [23] - 74:17, 74:18, 75:7, 75:15, 75:17, 76:6, 76:14, 77:8, 77:14, 77:24, 78:5, 78:9, 78:11, 79:17, 83:22, 84:4, 113:1, 113:7, 113:10, 113:18, 114:15, 116:12, 118:25
accommodate [2] - 75:19, 180:24
accordance [3] - 132:13, 187:22, 188:8
according [4] - 86:11, 100:22, 114:4, 134:25
accurate [2] - 63:23, 70:22
achieved [2] - 46:5, 194:4
acknowledged [1] - 207:2
acknowledgment [1] - 211:7
across-the-board [1] - 41:1
act [3] - 42:3, 54:17,

86:5
acting [1] - 2:15
Acting [1] - 1:13
action [3] - 18:25, 167:25, 201:6
actions [6] - 159:14, 159:17, 160:2, 165:7, 165:12, 166:17
active [2] - 141:11, 166:11
acts [1] - 38:14
actual [12] - 15:15, 15:20, 22:14, 22:16, 23:9, 26:8, 26:12, 27:3, 34:18, 34:22, 47:17, 52:16
add [5] - 109:9, 169:9, 182:14, 182:15, 183:22
added [3] - 76:13, 76:22, 78:10
adding [4] - 153:5, 180:25, 182:3, 183:7
addition [8] - 74:16, 75:11, 75:13, 78:13, 113:1, 148:1, 150:1, 180:24
addition/porch [1] - 149:2
additional [14] - 12:13, 13:1, 15:3, 46:14, 54:4, 66:12, 66:18, 79:16, 91:2, 136:4, 161:7, 172:20, 191:9, 206:10
additionally [10] - 14:7, 14:17, 75:15, 77:7, 84:15, 86:4, 113:13, 115:9, 124:19, 169:7
address [24] - 3:18, 8:17, 13:7, 16:5, 16:8, 56:13, 59:12, 66:18, 71:13, 78:23, 87:14, 87:19, 116:25, 117:4, 140:19, 152:5, 157:4, 159:21, 160:4, 160:13, 162:15, 165:8, 172:2, 205:9
addressed [1] - 4:11
addresses [1] - 189:1
adjacent [8] - 19:2, 64:11, 80:7, 80:16, 169:1, 169:25, 183:9, 190:22
adjoining [2] - 80:8, 84:14
adjusted [1] - 75:19
adjusting [1] - 134:8
administrative [2] - 122:14, 171:17
Administratively [1] - 6:3
administratively [2] - 82:14, 182:7
advantage [1] - 183:9
aerial [1] - 116:6
affect [2] - 65:15, 97:11
affirm [10] - 13:12, 16:14, 56:18, 79:5, 87:25, 117:13, 117:22, 141:2, 152:15, 161:16
affirmatively [1] - 181:18
afford [2] - 61:13, 89:18
African [1] - 185:18
African-American [1] - 185:18
after-the-fact [4] - 113:2, 128:9, 139:18, 166:15
afternoon [4] - 98:3, 172:16, 190:2, 203:1
age [1] - 197:13
agenda [37] - 4:10, 4:12, 4:14, 4:16, 4:21, 4:24, 5:6, 5:10, 5:14, 5:19, 6:2, 6:11, 6:16, 6:20, 6:23, 7:16, 7:20, 7:21, 7:23, 8:1, 8:6, 9:11, 9:18, 9:24, 10:14, 10:19, 10:23, 73:24, 112:11, 123:16, 138:25, 146:12, 168:2, 185:3, 194:17, 199:13, 204:25
Agenda [1] - 204:2
ago [4] - 65:19, 118:18, 188:1, 196:22
agree [10] - 57:6, 64:4, 84:21, 99:14, 127:23, 129:17, 144:19, 144:22, 164:25, 186:18
agreed [2] - 4:23, 8:23
agreement [3] - 8:11, 9:9, 181:22
ahead [3] - 110:1, 120:14, 204:25
AIA/State [1] - 210:13
air [2] - 58:19, 129:13
akin [1] - 185:11
align [1] - 65:25
alignment [1] - 164:24
alleviate [1] - 66:25
alleviation [1] - 48:13
alley [2] - 173:1, 183:25
alleys [1] - 183:10
alleyway [11] - 169:1, 170:3, 170:23, 173:18, 173:24, 174:7, 174:11, 174:14, 174:21, 177:6, 183:10
allocated [3] - 204:14, 205:24, 206:10
allow [14] - 57:20, 61:9, 66:11, 70:4, 71:18, 81:10, 82:3, 86:8, 86:9, 90:18, 90:24, 102:18, 144:17, 184:18
allowed [3] - 162:13, 163:21, 182:15
allowing [3] - 41:9, 83:15, 94:25
allows [2] - 105:22, 114:18
alluded [1] - 102:12
almost [4] - 17:25, 81:6, 186:10, 208:2
already-conducted [1] - 146:24
ALSO [1] - 1:16
alter [3] - 150:7, 168:17, 169:7
alteration [3] - 78:3, 148:12, 170:13
alterations [6] - 115:11, 146:22, 147:6, 148:8, 149:4, 171:12
alternative [1] - 111:3
altogether [1] - 201:10
aluminum [6] - 23:23, 101:4, 114:3, 148:17, 155:14, 155:20
amenable [1] - 171:3
amend [1] - 167:3
amending [1] - 84:3
amendment [1] - 83:18
American [1] - 185:18
Americans [1] - 18:1
amid [1] - 170:13
amount [8] - 12:4, 37:19, 45:20, 89:15, 90:8, 104:17, 104:20, 135:18
analysis [6] - 77:11, 178:6, 188:15, 195:1, 195:10, 196:25
Andersen [1] - 24:7
Annie [1] - 201:7
announce [1] - 3:25
announced [1] - 186:2
announcements [1] - 3:5
answer [10] - 14:10, 32:9, 43:14, 51:21, 93:7, 132:7, 185:5, 186:16, 186:17, 191:9
answered [1] - 15:5
answers [3] - 103:14, 136:23, 166:20
anticipate [1] - 201:18
anticipated [1] - 202:1
anticipation [2] - 188:10, 194:23
apart [4] - 29:21, 40:24, 61:12, 144:11
apologies [1] - 156:8
Appeals [1] - 6:3
appear [3] - 126:7, 149:14, 180:16
appearance [3] - 58:7, 99:11, 118:8
appearances [1] - 124:4
appeared [2] - 153:17, 153:20
apples [2] - 18:17
applicant [87] - 8:9, 11:2, 11:20, 11:25, 12:7, 13:3, 15:8, 24:22, 30:11, 43:13, 55:18, 64:12, 66:11, 66:14, 68:8, 74:6, 76:16, 76:19, 77:2, 77:7, 77:16, 77:24, 78:21, 80:23, 82:11, 82:20, 85:23, 86:12, 87:11, 92:22, 92:23, 93:22, 93:23, 97:8, 97:19, 105:4, 107:3, 110:2, 113:8, 113:20, 116:2, 116:21, 121:23, 122:1, 123:9, 128:5, 129:20, 132:16, 134:4, 134:11, 134:14, 135:5, 135:25, 140:15, 141:22, 141:24, 142:6, 142:16, 149:3, 152:1, 153:8, 153:11, 153:23, 154:10, 154:15, 157:15, 158:9, 158:14, 161:4, 165:14, 168:14, 169:4, 170:22, 171:2, 171:24, 174:25, 175:2, 175:24, 176:7, 176:12, 177:15, 180:21, 189:18, 189:25, 191:12, 192:6, 194:7
applicant's [4] - 86:17, 160:17, 179:14, 179:16
applicants [6] - 3:11, 3:23, 4:22, 10:17, 43:10, 205:24
application [10] - 44:4, 76:25, 147:22, 152:24, 153:21, 161:10, 163:5, 176:18, 178:15, 190:10
applications [1] - 205:20
applied [3] - 42:21, 150:24, 160:12
apply [7] - 42:23, 61:15, 103:8, 103:9, 159:15, 182:22, 197:14
applying [1] - 105:1
appraiser [1] - 114:4
appreciate [4] - 121:16, 137:10, 138:9, 191:8
approach [2] - 100:16, 117:2
approached [1] - 134:4
approaches [17] - 8:12, 11:3, 16:3, 56:14, 59:10, 66:16, 78:24, 87:16, 93:1, 105:6, 129:24, 136:3, 140:20, 152:7, 161:12, 184:23, 189:22
appropriate [9] - 47:11, 57:16, 64:8, 113:25, 134:1, 155:8, 169:20, 193:14, 193:19
Appropriateness [5] - 5:15, 5:20, 73:25, 85:3, 112:12
approval [21] - 3:24, 6:25, 33:21, 33:23,

35:25, 45:25, 50:13, 50:14, 64:18, 78:16, 87:5, 113:2, 119:20, 122:2, 122:15, 153:4, 178:14, 193:2, 195:14, 198:3, 198:8
approve [27] - 7:3, 9:23, 10:25, 38:17, 40:15, 82:13, 83:4, 84:2, 91:12, 109:9, 109:18, 110:5, 128:4, 128:20, 132:12, 156:12, 158:1, 175:8, 175:10, 176:24, 178:13, 178:21, 181:25, 182:10, 193:8, 196:1, 198:17
Approved [2] - 6:3, 6:6
approved [38] - 7:15, 9:7, 10:12, 10:15, 13:21, 14:14, 49:8, 55:8, 61:17, 64:14, 84:6, 85:1, 112:5, 115:12, 116:8, 119:24, 120:2, 122:10, 122:16, 122:21, 124:5, 134:7, 134:20, 135:22, 137:18, 143:24, 144:1, 154:13, 158:21, 168:3, 168:18, 169:8, 180:23, 182:6, 182:21, 184:9, 199:10, 209:24
approving [2] - 111:23, 182:16
April [5] - 119:25, 120:4, 137:15, 148:10, 153:17
apron [3] - 125:8, 169:3, 170:2
aprons [1] - 183:24
arb [1] - 145:8
arbitrarily [1] - 67:18
arbor [4] - 188:13, 190:20, 190:23, 190:25
Arbor [8] - 152:9, 187:21, 188:5, 189:8, 190:15, 193:10, 194:2, 194:16
architect [1] - 20:3
architectural [3] - 139:23, 140:6, 150:4
architecture [1] - 76:23
area [5] - 61:6, 177:9, 183:17, 189:3, 195:9
areas [5] - 103:8, 148:11, 148:18, 149:21, 170:19
Arimus [10] - 2:11, 15:6, 20:9, 32:23, 33:15, 33:18, 33:22, 38:2, 64:10, 208:6
ARIMUS [1] - 1:17
arrangement [2] - 44:15, 186:7
arrived [1] - 142:14
Arsenault [1] - 2:22
ARSENAULT [22] - 1:18, 2:22, 74:12, 83:13, 83:17, 112:21, 132:15, 134:10, 134:18, 146:19, 151:13, 153:15, 159:25, 168:11, 179:4, 179:11, 179:25, 180:16, 180:21, 181:3, 181:7, 181:12
asbestos [5] - 148:13, 151:18, 153:12, 153:18, 160:6
aspect [2] - 46:17, 80:11
asphalt [1] - 169:21
assemble [1] - 187:8
assembled [1] - 34:22
assesses [1] - 12:4
assessment [2] - 45:17, 70:22
associated [3] - 77:13, 115:20, 169:17
assumed [1] - 122:20
assuming [2] - 66:7, 119:1
assumption [2] - 93:6, 122:20
attached [1] - 202:2
attachments [1] - 160:22
attempt [2] - 186:16, 190:7
attention [2] - 57:1, 191:4
attorneys [2] - 172:5, 172:14
atypical [1] - 115:25
AUDIENCE [40] - 8:7, 8:13, 8:18, 9:19, 11:7, 11:10, 13:5, 13:8, 15:12, 16:7, 56:10, 56:15, 59:8, 59:13, 62:11, 74:7, 78:25, 83:1, 85:8, 87:12, 87:17, 91:8, 116:22, 117:3, 117:6, 123:17, 140:17, 140:21, 142:24, 152:3, 152:8, 163:6, 171:25, 172:4, 172:9, 172:13, 176:19, 186:23, 195:20, 198:14
Audience [10] - 8:12, 11:3, 16:3, 56:14, 59:10, 78:24, 87:16, 117:2, 140:20, 152:7
audience [2] - 10:13, 82:25
auditorium [2] - 208:7, 208:20
August [4] - 7:1, 7:4, 11:16, 171:3
authorized [1] - 213:8
automotive [2] - 107:11, 107:18
availability [1] - 88:22
available [9] - 94:12, 103:13, 103:14, 105:14, 173:1, 189:5, 198:5, 203:13, 203:17
Avenue [7] - 5:2, 5:4, 5:5, 5:16, 8:20, 74:15, 79:1
average [1] - 61:13
avoided [3] - 115:19, 169:16, 169:22
Avondale [8] - 5:2, 8:19, 74:23, 100:25, 113:4, 115:16, 168:20, 169:14
Award [2] - 206:22, 209:2
award [2] - 208:14, 209:10
awarded [2] - 88:25, 206:24
Awards [2] - 206:20, 207:10
awards [5] - 207:10, 208:8, 210:15, 211:23, 211:24
aware [2] - 88:19, 185:3
awnings [5] - 90:4, 90:5, 90:6, 90:7, 98:1
aye [12] - 7:11, 10:8, 84:24, 111:25, 112:3, 146:5, 146:6, 167:22, 184:5, 194:11, 196:8, 199:7

B

ba [3] - 99:16
background [1] - 98:13
bad [3] - 61:7, 105:14, 118:17
Ball [1] - 1:7
ball [1] - 212:13
bam [1] - 48:1
banquet [2] - 208:10, 209:7
banquets [1] - 208:2
base [3] - 26:17, 136:24, 182:5
based [14] - 29:8, 44:9, 100:7, 100:9, 110:22, 116:5, 164:2, 171:9, 188:15, 189:5, 195:1, 195:10, 196:25, 198:5
basic [1] - 210:19
basis [4] - 41:24, 43:20, 66:4, 119:18
bay [2] - 127:3, 127:8
bays [1] - 127:4
beam [2] - 130:8
beautiful [4] - 17:1, 48:12, 162:10, 190:23
beautifully [1] - 48:6
Becky [1] - 2:18
BECKY [1] - 1:14
become [1] - 81:6
becoming [1] - 103:14
beg [1] - 42:19
begging [1] - 42:4
begin [1] - 2:9
beginning [1] - 145:20
behalf [1] - 189:25
behind [3] - 11:23, 92:10, 121:6
belong [1] - 174:6
Ben [1] - 191:20
best [10] - 18:7, 27:6, 30:7, 31:6, 40:19, 65:22, 68:14, 121:12, 189:5, 198:5
Better [1] - 195:3
better [9] - 16:25, 18:2, 29:14, 51:8, 106:8, 133:19, 159:23, 203:20, 206:12
between [8] - 79:20, 125:25, 126:12, 160:11, 162:7, 181:9, 205:9, 207:1
beyond [6] - 58:21, 114:20, 128:23, 131:7, 131:9, 149:17
big [4] - 31:5, 69:17, 209:6, 210:15
bigger [3] - 133:18, 133:24, 134:1
biggest [4] - 15:9, 63:6, 63:24, 124:15
bill [1] - 201:6
bit [31] - 14:15, 16:25, 25:4, 29:3, 32:3, 32:4, 32:10, 34:16, 46:24, 48:22, 48:25, 50:21, 51:15, 51:22, 53:24, 64:21, 68:9, 71:25, 102:15, 104:13, 105:5, 125:3, 133:18, 138:15, 143:6, 173:17, 199:22, 200:8, 200:14, 204:7, 212:12
black [1] - 185:22
blank [1] - 76:15
blend [4] - 45:14, 59:22, 59:24
blends [3] - 47:24, 48:3, 48:5
blinds [1] - 92:9
block [6] - 42:6, 42:16, 55:11, 61:6, 115:20, 169:18
blocks [1] - 95:11
blue [1] - 36:17
Blue [1] - 59:13
board [8] - 13:21, 14:14, 15:4, 16:1, 18:11, 41:1, 43:5, 43:9
boards [2] - 89:20, 149:25
body [2] - 163:23, 181:18
boils [1] - 178:9
book [4] - 12:3, 101:7, 155:19, 160:21
bottom [28] - 15:15, 25:13, 25:14, 25:18, 26:18, 27:8, 27:9, 31:24, 32:2, 35:12, 35:23, 36:12, 36:22, 37:3, 37:12, 37:13, 37:14, 49:23, 52:9, 53:9, 53:12, 63:19, 68:22, 90:12, 92:6, 119:13, 133:2,

156:19
bought [4] - 55:9, 60:22, 105:9, 119:4
boundary [1] - 197:3
brackets [1] - 90:12
Bradley [6] - 196:16, 196:19, 196:22, 198:2, 198:19, 199:12
brain [1] - 98:16
Branch [1] - 201:17
brand [2] - 25:9, 42:12
brand-new [1] - 42:12
brands [1] - 24:7
break [4] - 3:9, 31:16, 112:6, 181:8
breaker [1] - 53:24
breathability [1] - 129:4
brick [30] - 19:8, 19:10, 19:11, 19:14, 20:5, 21:9, 38:10, 38:11, 38:13, 38:14, 38:24, 38:25, 39:3, 39:13, 54:7, 54:9, 54:10, 54:12, 54:13, 54:16, 54:18, 63:10, 68:23, 69:15, 69:22, 70:5, 75:3, 147:4, 174:5
bricked [1] - 39:4
brief [5] - 100:10, 100:23, 102:9, 106:24, 112:8
Brief [1] - 100:14
briefs [4] - 100:10, 102:13, 102:17, 103:19
bright [1] - 94:5
bring [10] - 47:15, 48:14, 56:12, 131:6, 135:17, 190:9, 190:25, 202:14, 207:16, 207:23
bringing [1] - 207:15
Brittany [2] - 119:24, 122:6
broad [1] - 199:16
broken [1] - 58:18
bronze [1] - 58:15
brought [8] - 14:7, 15:10, 66:19, 136:6, 141:9, 145:11, 145:16, 206:19
bucks [1] - 106:10
budget [2] - 40:19, 206:9
buffer [1] - 200:8
build [2] - 188:9, 194:22
builder [1] - 141:8
building [14] - 58:5, 76:7, 77:8, 114:23, 115:8, 124:1, 126:21, 134:2, 141:11, 141:16, 143:12, 147:2, 153:17, 166:8
Building [2] - 1:8, 50:14
buildings [3] - 100:24, 115:21, 169:18
built [13] - 35:6, 39:2, 77:25, 78:5, 90:3, 94:10, 95:8, 113:19, 129:3, 129:7, 162:12, 162:18, 186:11
built-in [1] - 39:2
bulk [1] - 155:1
bulkheads [1] - 202:4
bump [2] - 20:22, 53:10
bumped [2] - 21:25, 53:9
bumping [1] - 53:3
bumps [1] - 35:21
Bungalow [6] - 6:13, 184:18, 185:1, 185:9, 185:25, 186:5
bungalows [4] - 185:11, 185:12, 185:14, 186:6
buried [1] - 35:22
business [2] - 40:24, 187:1
Business [6] - 6:12, 187:1, 202:7, 202:9, 203:24, 205:12
buy [3] - 34:8, 94:11, 106:9

C

CAD [1] - 34:24
Caleb [8] - 2:22, 118:6, 131:21, 152:24, 154:5, 154:20, 172:22, 173:9
CALEB [1] - 1:18
calendar [1] - 199:18
camera [1] - 128:16
cancelled [1] - 202:12
cannot [8] - 57:15, 61:13, 94:11, 110:16, 110:19, 188:19, 191:12, 192:21
canvass [1] - 14:17
capacity [4] - 207:18, 207:25, 208:17
capture [1] - 129:5
car [1] - 115:2
card [8] - 3:12, 3:13, 56:12, 87:14, 116:25, 152:6, 172:3, 172:12
cards [2] - 6:24, 172:4
carefully [1] - 46:25
Carla [1] - 2:13
CARLA [1] - 1:19
Caroline [1] - 117:6
carried [1] - 77:20
cars [2] - 107:21
case [13] - 41:24, 42:20, 43:15, 43:16, 43:17, 43:20, 58:12, 66:4, 119:3, 132:22
case-by-case [3] - 41:24, 43:20, 66:4
cast [2] - 58:15, 92:9
catch [1] - 143:15
categories [1] - 210:19
category [1] - 210:17
Cates [1] - 95:10
Catherine [7] - 196:16, 197:1, 197:11, 197:12, 197:15, 198:18, 199:11
caulk [2] - 50:19, 53:4
causing [1] - 120:11
cell [1] - 19:7
cement [3] - 148:14, 151:19, 160:6
cement/asbestos [1] - 147:8
cementitious [4] - 147:11, 149:25, 161:23, 163:20
centered [1] - 133:18
century [1] - 197:8
ceremony [2] - 208:9, 208:14
certain [7] - 24:1, 35:7, 103:6, 103:8, 104:16, 104:20, 135:17
certainly [12] - 16:23, 17:22, 24:16, 25:3, 30:1, 51:3, 69:12, 70:4, 101:24, 162:21, 162:24, 207:7
Certificate [1] - 85:3
certificate [1] - 211:6
CERTIFICATE [1] - 213:1
Certificates [4] - 5:14, 5:20, 73:25, 112:11
certified [1] - 141:8
certify [1] - 213:8
chain [1] - 80:15
chain-link [1] - 80:15
Chair [140] - 1:13, 2:15, 9:6, 11:14, 12:19, 18:21, 24:21, 30:10, 33:18, 34:16, 39:22, 40:6, 41:11, 43:12, 44:8, 44:25, 45:5, 45:23, 46:3, 46:12, 48:24, 62:18, 63:5, 64:3, 64:9, 64:25, 68:8, 70:15, 72:10, 74:13, 80:22, 81:14, 82:10, 83:13, 84:11, 85:12, 91:17, 91:23, 92:19, 92:21, 93:23, 97:6, 98:12, 99:13, 100:8, 102:5, 102:16, 104:1, 105:4, 106:22, 107:3, 108:19, 109:6, 112:21, 121:25, 123:25, 126:16, 126:25, 127:19, 127:21, 128:7, 128:15, 129:8, 129:16, 131:4, 132:2, 132:3, 132:15, 133:12, 134:10, 134:11, 135:19, 136:14, 136:17, 141:24, 143:8, 143:9, 143:14, 143:20, 144:4, 144:18, 145:5, 146:20, 151:6, 151:13, 153:10, 153:15, 153:22, 154:10, 154:15, 155:12, 157:8, 157:15, 158:13, 159:25, 160:1, 160:15, 163:13, 164:23, 165:9, 165:10, 165:17, 166:9, 166:24, 167:7, 175:1, 175:7, 175:12, 175:23, 176:5, 177:18, 177:23, 178:10, 179:4, 179:6, 179:11, 179:25, 182:18, 183:2, 183:21, 187:5, 189:12, 189:16, 191:11, 191:19, 192:25, 193:13, 194:6, 199:25, 200:11, 202:10, 203:4, 203:14, 205:3, 205:21, 206:18, 207:6, 210:13
chair [1] - 100:4
Chair's [1] - 193:4
CHAIRMAN [259] - 2:3, 2:15, 3:1, 7:7, 7:9, 7:12, 7:14, 8:3, 8:8, 8:16, 8:21, 9:1, 9:15, 9:17, 9:20, 10:3, 10:6, 10:9, 10:11, 11:4, 11:8, 11:11, 12:15, 12:25, 13:3, 13:6, 15:7, 16:4, 16:8, 18:18, 23:18, 34:12, 37:7, 41:23, 44:1, 55:15, 55:22, 55:25, 56:4, 56:7, 56:11, 59:5, 59:9, 59:11, 59:15, 62:8, 62:12, 62:15, 62:21, 63:3, 65:24, 66:17, 68:6, 70:7, 70:18, 73:6, 73:20, 74:5, 74:8, 78:17, 78:21, 82:19, 82:22, 82:24, 83:2, 83:10, 84:8, 84:10, 84:19, 84:21, 84:25, 85:9, 87:7, 87:10, 87:13, 87:19, 91:1, 91:5, 91:9, 91:15, 92:16, 92:23, 93:2, 93:24, 101:18, 102:4, 106:14, 106:16, 106:19, 109:25, 110:2, 110:5, 110:11, 110:14, 110:19, 110:25, 111:7, 111:9, 111:13, 111:16, 111:22, 112:1, 112:3, 112:9, 112:18, 116:17, 116:20, 116:23, 118:3, 120:22, 120:24, 121:15, 121:19, 121:22, 123:8, 123:11, 123:15, 123:18, 123:23, 124:25, 125:2, 125:17, 126:4, 126:7, 127:13, 127:23, 128:12, 129:15, 129:19, 129:23, 130:2, 130:14,

130:18, 131:2, 131:22, 131:24, 132:9, 133:11, 134:3, 134:17, 135:9, 135:12, 135:24, 136:4, 136:10, 137:22, 138:1, 138:3, 138:6, 138:8, 138:18, 138:21, 138:24, 139:5, 140:13, 140:15, 140:18, 141:21, 142:5, 142:11, 142:15, 142:18, 142:21, 142:25, 143:5, 144:22, 145:24, 146:2, 146:7, 146:9, 146:16, 151:4, 151:23, 152:1, 152:4, 153:7, 158:8, 158:12, 159:4, 159:8, 159:11, 160:14, 161:3, 161:6, 161:9, 163:3, 163:7, 163:12, 165:2, 165:5, 165:15, 166:1, 167:16, 167:19, 167:23, 167:25, 168:9, 171:20, 171:23, 172:1, 172:8, 174:24, 176:11, 176:14, 176:17, 176:20, 177:1, 179:22, 180:8, 180:12, 180:18, 181:1, 181:4, 181:11, 182:25, 183:4, 184:2, 184:6, 184:8, 184:14, 184:20, 186:21, 186:24, 187:14, 187:18, 189:10, 192:4, 192:9, 192:12, 192:16, 193:12, 194:5, 194:10, 194:12, 194:14, 195:15, 195:18, 195:21, 195:24, 196:5, 196:9, 196:11, 198:9, 198:12, 198:15, 198:21, 198:23, 199:2, 199:6, 199:8, 199:10, 200:24, 202:6, 203:22, 204:1, 205:10, 206:14, 211:11, 212:16

challenge [1] - 17:19
chance [3] - 54:6, 138:12, 192:23
change [18] - 39:12, 58:10, 60:9, 60:23, 76:17, 86:25, 102:25, 103:1, 114:22, 115:6, 177:21, 189:7, 189:15, 194:22, 195:12, 196:17, 197:14, 198:7
changed [4] - 103:12, 177:4, 186:8, 188:4
changes [4] - 65:3, 118:9, 171:15, 180:17
changing [3] - 39:6, 58:3, 58:7
channel [2] - 29:8, 70:2
chaotic [1] - 99:17
Chapter [2] - 187:22, 188:9
character [4] - 58:4, 58:5, 114:23, 170:12
characteristics [1] - 139:23
characterize [1] - 170:14
characterized [4] - 75:1, 75:8, 147:2, 168:23
cheap [4] - 30:22, 31:8, 31:13
check [4] - 74:9, 136:18, 137:3, 157:3
chemically [1] - 107:9
chimney [3] - 75:3, 140:3, 141:18
chimneys [10] - 139:11, 139:14, 139:19, 141:12, 142:12, 143:19, 144:6, 144:9, 144:20, 144:23
Chisholm [3] - 8:18, 8:19, 9:16
CHISHOLM [3] - 8:24, 9:2, 9:12
choice [2] - 71:13, 210:16
chose [2] - 9:9, 134:25
chosen [2] - 190:16, 191:24
chunkiness [1] - 50:10
chunky [1] - 69:17
circumstance [1] - 212:9
citation [2] - 143:22, 153:19
cited [1] - 137:5
citing [1] - 182:1
city [3] - 207:5, 209:11, 211:20
City [19] - 137:18, 162:2, 174:8, 175:10, 177:13, 182:16, 195:4, 196:18, 196:22, 197:19, 197:21, 200:18, 201:10, 201:25, 206:20, 209:16, 209:17, 210:22
CITY [1] - 1:1
city's [1] - 197:3
City's [1] - 210:23
City-owned [2] - 196:18, 197:19
clad [3] - 17:5, 55:4, 114:2
cladded [1] - 148:13
clamps [1] - 81:20
clarification [5] - 12:20, 79:15, 93:19, 107:2, 182:3
clarified [1] - 67:22
clarify [6] - 14:16, 70:10, 105:5, 133:13, 178:11, 181:8
clarifying [2] - 92:13, 98:10
clarity [3] - 80:20, 128:8, 199:3
clean [2] - 70:3, 174:8
clean-out [1] - 174:8
clear [13] - 26:8, 85:15, 85:19, 88:10, 88:14, 95:22, 95:23, 96:20, 100:18, 105:19, 109:1, 109:23, 165:5
clearly [2] - 3:17, 25:17
close [9] - 9:20, 62:12, 83:2, 91:10, 123:18, 142:25, 163:8, 176:20, 186:24
closed [1] - 197:23
closer [3] - 21:22, 63:22, 173:21
closest [1] - 66:8
clouded [1] - 120:2
clouds [2] - 97:3, 97:4
CO [1] - 157:19
COA [29] - 5:21, 44:10, 71:4, 111:23, 112:12, 115:12, 116:8, 136:15, 140:8, 141:17, 141:18, 141:24, 143:10, 143:15, 143:23, 144:1, 157:11, 157:16, 159:16, 159:20, 165:1, 165:6, 166:25, 167:3, 167:6, 168:3, 168:18, 174:23, 204:22
COA-25-31904 [1] - 168:18
COA-25-32139 [4] - 5:23, 112:14, 112:22, 123:21
COA-25-32215 [5] - 5:25, 146:13, 146:21, 163:10, 167:20
COA-25-32249 [3] - 5:8, 10:21, 63:1
COA-25-32485 [2] - 4:25, 9:24
COA-25-32497 [1] - 10:1
COA-25-324974 [1] - 5:5
COA-25-32545 [2] - 5:1, 9:25
COA-25-32678 [1] - 9:25
COA-25-32679 [1] - 5:3
COA-25-32701 [6] - 5:16, 74:1, 74:14, 83:5, 84:3, 85:1
COA-25-32733 [2] - 5:2, 9:25
COA-25-32734 [5] - 5:17, 85:4, 85:13, 91:13, 112:5
COA-25-32760 [6] - 5:24, 138:25, 139:9, 143:3, 146:4, 146:10
COAs [3] - 6:3, 6:6, 44:19
Coast [2] - 103:9
Coastal [1] - 140:22
Coats [3] - 95:10, 105:8, 109:13
Code [12] - 50:14, 76:2, 114:5, 116:14, 140:10, 149:4, 162:3, 170:8, 171:13, 187:23, 204:4, 204:10
cohesive [1] - 99:23
coincide [2] - 77:9, 77:23
COJ [1] - 189:13
collapsing [1] - 145:22
color [1] - 114:8
colors [1] - 58:9
columns [1] - 162:10
combing [1] - 209:20
comfortable [1] - 191:23
coming [7] - 17:20, 67:18, 68:13, 90:8, 94:3, 187:12, 189:15
commencing [1] - 1:7
comment [7] - 68:17, 118:24, 124:24, 127:18, 184:12, 184:16, 186:25
comments [5] - 6:10, 164:24, 184:18, 186:22, 205:8
COMMISSION [53] - 1:2, 7:8, 7:11, 7:13, 8:2, 10:5, 10:8, 10:10, 13:2, 62:14, 70:23, 74:4, 78:20, 82:21, 84:20, 84:24, 87:9, 111:25, 112:2, 112:17, 116:19, 123:10, 135:11, 139:4, 140:14, 142:17, 146:1, 146:6, 146:8, 146:15, 151:25, 161:5, 165:4, 167:18, 167:22, 167:24, 168:8, 171:22, 176:13, 181:20, 184:5, 184:7, 192:8, 194:11, 194:13, 195:17, 195:23, 196:8, 196:10, 198:11, 198:22, 199:7, 199:9
commission [3] - 59:2, 124:21, 164:8
Commission [45] - 1:14, 1:14, 1:15, 2:5, 3:2, 3:11, 11:15, 33:21, 66:10, 74:13, 81:9, 83:14, 85:13, 91:24, 100:9, 102:17, 112:22, 128:8, 132:3, 132:16, 143:15, 143:21, 144:19, 146:20, 148:7, 151:14, 153:16,

160:1, 160:16, 168:12, 178:11, 179:5, 179:12, 180:1, 185:6, 187:5, 199:17, 199:20, 201:14, 202:24, 203:15, 204:15, 207:19, 210:9
Commission's [1] - 7:1
COMMISSIONER [303] - 2:16, 2:18, 2:20, 7:3, 7:6, 9:23, 10:2, 12:18, 15:9, 15:13, 18:20, 18:24, 19:9, 19:13, 20:2, 20:14, 20:19, 21:2, 21:6, 22:3, 22:14, 22:21, 22:25, 23:3, 23:11, 24:21, 25:7, 25:10, 25:15, 25:23, 26:3, 26:14, 27:10, 27:15, 27:18, 27:25, 28:18, 29:16, 30:2, 30:6, 30:10, 30:18, 32:11, 32:15, 32:20, 32:22, 32:23, 33:11, 33:14, 33:17, 34:7, 34:15, 35:11, 35:24, 36:6, 36:9, 36:13, 36:24, 37:2, 37:16, 37:21, 37:24, 38:8, 38:22, 39:16, 39:20, 40:6, 41:11, 41:17, 41:22, 43:12, 43:23, 44:24, 45:23, 46:12, 48:23, 49:13, 49:16, 50:2, 50:4, 51:6, 51:13, 52:10, 52:18, 53:17, 53:23, 54:3, 54:8, 54:15, 54:23, 62:24, 63:2, 63:4, 64:3, 64:9, 64:25, 67:21, 67:24, 68:3, 68:7, 69:19, 72:3, 72:6, 72:11, 80:22, 81:13, 82:10, 82:17, 83:4, 83:16, 83:20, 84:9, 84:11, 91:12, 91:14, 91:17, 92:1, 92:4, 92:12, 92:21, 93:5, 93:13, 93:17, 93:21, 93:25, 94:16, 94:20, 94:24, 95:25, 96:9, 96:14, 96:19, 96:24, 97:1, 97:6, 97:11, 97:14, 97:16, 97:18, 97:24, 98:6, 98:9, 98:12, 99:13, 100:4, 101:10, 101:21, 102:5, 103:16, 104:1, 106:15, 106:21, 107:1, 107:10, 107:15, 108:18, 109:2, 109:5, 109:16, 110:1, 111:4, 111:19, 121:25, 122:8, 122:13, 122:25, 123:4, 123:20, 123:22, 123:25, 125:5, 125:19, 126:9, 126:16, 127:5, 127:10, 127:19, 127:21, 128:15, 129:8, 129:11, 129:12, 129:14, 129:16, 130:25, 131:3, 131:11, 132:2, 133:12, 135:8, 136:13, 137:6, 138:11, 138:14, 141:23, 142:2, 143:2, 143:4, 143:6, 143:17, 144:2, 144:3, 144:18, 145:5, 151:6, 153:10, 153:14, 153:22, 153:25, 154:9, 154:14, 154:25, 155:4, 155:7, 155:11, 155:18, 156:3, 156:9, 156:17, 157:7, 157:14, 158:13, 158:19, 158:24, 159:3, 159:6, 159:9, 163:9, 163:11, 163:13, 164:23, 165:17, 166:3, 166:13, 166:21, 166:23, 167:11, 167:14, 175:1, 175:6, 175:7, 175:23, 176:22, 176:25, 177:3, 177:18, 178:16, 178:24, 179:1, 179:3, 179:9, 179:15, 179:19, 179:23, 180:6, 180:19, 181:14, 181:24, 182:12, 182:14, 182:24, 183:2, 183:21, 189:12, 189:20, 191:11, 192:1, 192:14, 192:17, 193:5, 193:11, 193:13, 194:6, 196:1, 196:4, 198:17, 198:20, 199:1, 199:4, 199:25, 200:16, 202:8, 202:13, 202:15, 202:16, 202:20, 202:22, 203:1, 203:2, 203:3, 203:8, 203:11, 203:19, 206:17, 208:6, 208:18, 209:13, 210:12, 211:10, 211:12, 211:15, 211:16, 211:22
Commissioner [49] - 11:22, 12:9, 13:19, 13:23, 13:24, 14:11, 15:23, 30:16, 33:6, 40:7, 42:18, 45:6, 46:13, 47:7, 64:4, 65:5, 65:25, 66:25, 67:6, 83:14, 84:22, 97:7, 101:18, 104:2, 106:19, 110:3, 127:1, 127:17, 127:20, 129:9, 132:4, 134:11, 134:23, 136:18, 145:7, 151:14, 155:12, 166:10, 167:8, 175:13, 176:6, 177:24, 178:12, 182:19, 189:17, 193:1, 203:5, 203:15, 207:7
commissioner [5] - 2:17, 2:19, 2:21, 112:15, 168:5
commissioners [11] - 4:4, 7:25, 12:16, 39:23, 74:2, 78:19, 87:8, 116:18, 121:20, 139:3, 146:14
Commissioners [2] - 3:3, 187:24
commissions [1] - 72:24
committed [1] - 202:17
committee [3] - 189:13, 189:14, 202:11
Committee [1] - 201:9
commodity [1] - 81:7
common [2] - 189:2, 195:8
community [3] - 185:18, 185:21, 186:12
compact [1] - 47:20
companies [4] - 24:11, 31:8, 41:2, 81:17
company [8] - 29:15, 56:1, 82:2, 86:12, 88:19, 89:17, 137:17, 154:23
compare [4] - 18:16, 37:2, 64:13, 108:11
compares [1] - 105:20
comparison [1] - 37:6
compatible [7] - 44:14, 76:9, 76:23, 114:19, 150:18, 171:13
complained [1] - 120:13
complete [4] - 4:2, 139:13, 206:4, 213:10
Completed [1] - 5:21
completed [4] - 113:17, 116:7, 146:24, 160:3
completely [11] - 42:9, 47:25, 48:7, 54:21, 55:1, 57:14, 94:18, 95:17, 143:13, 190:10, 193:18
Compliance [1] - 204:4
complicated [1] - 180:7
Complies [6] - 16:13, 79:4, 87:24, 117:11, 141:1, 152:14
comply [1] - 81:12
components [2] - 115:16, 169:13
composite [1] - 81:5
composition [10] - 75:2, 75:9, 77:15, 77:17, 77:21, 78:1, 78:6, 78:11, 78:13, 114:7
compromise [2] - 65:8, 65:9
compromising [2] - 166:17, 208:16
concentration [1] - 185:16
concentrations [1] - 185:10
concern [4] - 31:2, 46:22, 47:13, 183:18
concerned [1] - 49:9
concerns [12] - 39:25, 40:1, 47:14, 66:19, 67:1, 67:13, 67:16, 71:13, 86:17, 136:6, 159:22, 207:13
concluded [1] - 212:19
concrete [15] - 113:2, 113:14, 115:24, 120:9, 137:17, 169:3, 169:5, 169:19, 169:21, 170:2, 171:5, 171:6, 171:8, 178:4, 178:7
concur [1] - 127:20
Condemned [1] - 5:10
condensation [2] - 95:4, 95:17
Condition [6] - 77:22, 83:5, 83:6, 83:21, 84:3, 87:3
condition [6] - 70:13, 89:14, 109:9, 148:10, 180:5, 182:15
conditioned [4] - 77:14, 77:20, 78:4, 78:7
conditioning [1] - 76:25
conditions [27] - 4:23, 8:10, 9:10, 11:1, 58:20, 78:15, 78:16, 79:13, 80:19, 85:1, 87:5, 91:13, 108:20, 109:7, 109:17, 109:19, 109:20, 110:6, 110:8, 111:11, 111:24, 135:2, 147:14, 165:10, 178:14, 182:10, 184:10
Conditions [1] - 78:8
conduct [2] - 112:23, 147:12
conducted [8] - 115:11, 116:8, 146:24, 148:9, 151:16, 151:22, 153:16, 160:10
Confederate [15] - 187:21, 188:2, 188:5, 188:18, 188:21, 188:22, 189:1, 189:7, 190:7, 190:17, 190:18, 190:19, 191:7, 193:9, 194:16
conference [1] - 72:1
confers [1] - 33:6
configuration [1] - 58:11

confirm [1] - 111:10
confirmed [1] - 190:8
conflict [1] - 178:5
conflicts [1] - 127:7
conform [1] - 103:13
conforms [1] - 116:12
confusing [1] - 39:17
confusion [1] - 102:6
conjectural [2] - 78:3, 115:6
connected [1] - 143:11
connection [1] - 50:17
consensus [3] - 127:14, 164:11, 181:17
consent [14] - 4:21, 4:24, 7:20, 7:21, 7:22, 8:1, 8:6, 8:15, 8:20, 9:11, 9:13, 9:18, 9:24, 10:14
consider [10] - 4:4, 6:25, 7:23, 81:9, 128:3, 143:1, 144:13, 163:8, 180:5, 196:14
consideration [2] - 34:3, 124:14
considered [5] - 4:13, 57:11, 57:12, 130:3, 139:18
considering [1] - 43:5
consistent [8] - 76:2, 76:6, 76:22, 76:25, 83:18, 83:23, 84:5, 191:6
construct [4] - 74:15, 74:18, 77:8, 147:22
constructed [7] - 75:13, 101:3, 115:23, 150:24, 151:16, 195:2, 195:4
construction [6] - 44:18, 44:19, 75:20, 147:20, 150:19, 150:21
consultant [1] - 137:11
contact [3] - 72:16, 72:17, 111:1
contains [2] - 113:6, 168:22
contemporary [2] - 133:1, 133:2
continually [1] - 177:8
continue [6] - 66:11, 73:15, 81:5, 120:8, 137:7, 193:19
contract [1] - 98:19
contraction [1] - 99:1
contractor [3] - 126:10, 153:24, 154:1
contracts [1] - 205:25
contrary [1] - 118:20
contrast [1] - 108:12
contributed [1] - 46:5
contributing [10] - 45:12, 67:10, 74:22, 113:3, 139:11, 139:22, 140:6, 144:10, 146:23, 168:19
contributions [1] - 197:8
control [3] - 94:3, 96:6, 96:15
conundrum [1] - 82:5
conversation [7] - 55:16, 65:18, 111:18, 125:3, 176:8, 195:22, 207:12
conversations [1] - 70:9
coordination [2] - 196:17, 197:24
copies [3] - 4:5, 19:19, 172:20
copy [2] - 4:8, 132:17
corner [3] - 30:20, 113:5, 190:6
corners [1] - 31:12
correct [28] - 10:24, 37:20, 37:23, 37:25, 40:9, 52:17, 53:21, 53:22, 54:22, 62:17, 62:19, 72:18, 72:19, 92:3, 93:11, 93:12, 103:25, 106:24, 111:6, 135:18, 135:19, 159:24, 160:10, 165:10, 167:6, 187:17, 205:3
corrective [6] - 159:14, 159:17, 160:2, 165:6, 165:12, 166:16
correctly [3] - 127:2, 157:1, 192:3
correspondence [1] - 134:13
cost [2] - 89:15, 106:9
Council [5] - 188:11, 191:22, 192:19, 197:21, 201:11
Councilman [1] - 190:12
Counsel [4] - 1:19, 2:14, 143:9, 175:8
counsel [3] - 72:4, 72:7, 107:23
COUNTY [1] - 213:4
couple [11] - 15:22, 15:23, 42:15, 57:9, 71:9, 95:11, 161:22, 187:25, 188:1, 203:23, 204:1
course [4] - 66:3, 160:19, 207:23, 208:17
Court [7] - 6:13, 19:25, 184:18, 185:2, 185:9, 185:25, 186:5
court [2] - 3:16, 19:24
courtesy [1] - 3:6
cover [1] - 65:13
coverage [1] - 47:12
covered [2] - 148:24, 149:2
covering [5] - 139:15, 147:9, 148:3, 149:18, 149:24
Coward [3] - 87:18, 93:1, 105:6
COWARD [43] - 87:20, 87:24, 88:4, 88:6, 89:25, 91:4, 92:14, 92:17, 93:4, 93:12, 93:16, 94:6, 94:19, 94:23, 95:1, 96:8, 96:13, 96:16, 96:22, 96:25, 97:3, 97:13, 97:21, 97:25, 98:7, 98:11, 105:7, 106:17, 106:25, 107:4, 107:13, 108:15, 108:25, 109:12, 109:21, 110:4, 110:9, 110:12, 110:16, 110:22, 111:8, 111:12, 111:14
crack [1] - 204:18
cracks [1] - 157:24
Craftsman [2] - 134:15, 147:18
create [1] - 181:16
created [1] - 206:22
creating [1] - 175:19
creation [1] - 170:5
credit [1] - 103:21
criteria [8] - 76:2, 114:5, 116:14, 140:10, 170:8, 171:10, 171:13, 188:8
criteria/design [1] - 149:5
crushed [1] - 120:10
curb [30] - 113:15, 115:17, 116:4, 120:6, 120:16, 125:7, 168:25, 169:2, 169:6, 169:14, 169:24, 170:2, 170:5, 171:9, 172:24, 172:25, 174:16, 174:17, 174:18, 175:4, 175:9, 175:11, 177:21, 177:25, 178:2, 178:9, 182:16, 183:7, 183:23
curb-cut [16] - 116:4, 125:7, 168:25, 169:2, 169:6, 169:24, 170:2, 170:5, 171:9, 172:24, 172:25, 174:16, 174:17, 174:18, 177:25, 178:9
curb-cuts [8] - 115:17, 169:14, 175:9, 177:21, 178:2, 182:16, 183:7, 183:23
cure [1] - 166:12
curious [1] - 189:15
current [8] - 110:6, 115:9, 115:25, 134:6, 159:20, 174:16, 180:2, 206:12
cut [18] - 70:3, 116:4, 125:7, 168:25, 169:2, 169:6, 169:24, 170:2, 170:5, 171:9, 172:24, 172:25, 174:16, 174:17, 174:18, 175:4, 177:25, 178:9
cut-out [1] - 175:4
cute [1] - 210:24
cuts [8] - 115:17, 169:14, 175:9, 177:21, 178:2, 182:16, 183:7, 183:23
cycle [6] - 70:8, 73:22, 137:23, 187:7, 205:22, 206:12
Cyndy [1] - 189:24

D

damage [4] - 12:5, 86:7, 114:1, 129:2
damaged [1] - 95:3
damaging [1] - 97:23
damp [1] - 97:22
Dancy [1] - 185:12
danger [1] - 145:22
Darrell [1] - 117:4
data [2] - 33:24, 33:25
date [8] - 89:1, 120:4, 137:15, 178:24, 178:25, 179:1, 179:21, 201:19
DATED [1] - 213:15
dated [2] - 119:6, 179:7
dates [2] - 118:20, 199:18
dating [1] - 190:22
daughter [1] - 197:12
days [1] - 37:11
deal [1] - 53:24
deal-breaker [1] - 53:24
dealing [1] - 18:8
decay [1] - 12:5
decide [2] - 145:9, 145:18
decided [2] - 42:20, 191:14
decimated [1] - 185:20
decision [5] - 29:24, 30:3, 81:4, 81:16, 107:25
declare [6] - 8:1, 12:17, 74:3, 112:16, 139:2, 146:14
decomposed [1] - 129:2
decorative [1] - 150:17
decreases [1] - 86:2
decrepit [1] - 61:1
dedicate [1] - 183:12
deemed [6] - 44:11, 45:9, 45:16, 46:2, 46:4, 211:8
defer [5] - 71:10, 137:23, 138:18, 165:22, 165:23
deferral [3] - 66:13, 70:8, 71:16
deferred [8] - 4:18, 4:19, 5:7, 7:16, 7:19, 10:20, 62:16, 73:21
deferring [1] - 187:7
deficiencies [1] -

166:18
defined [1] - 140:2
defining [2] - 58:4, 144:5
definitely [5] - 25:2, 30:9, 49:14, 49:16, 101:14
definitive [3] - 98:23, 99:4, 156:11
deflection [1] - 50:12
delay [2] - 6:18, 201:1
demo [2] - 51:23, 201:1
Demo [1] - 204:3
demolish [1] - 74:17
demolished [1] - 75:16
demolition [1] - 6:18
demolitions [1] - 201:3
demonstrate [1] - 121:5
demonstrated [1] - 65:14
denial [7] - 116:16, 140:11, 151:3, 171:19, 177:19, 193:3
denied [11] - 135:14, 135:16, 143:10, 145:20, 146:10, 159:16, 159:20, 165:6, 166:6, 168:1
deny [14] - 10:24, 59:3, 62:25, 63:1, 71:4, 71:19, 123:20, 143:2, 145:4, 159:13, 163:9, 165:1, 165:23, 167:20
denying [1] - 146:4
Department [11] - 1:18, 1:18, 2:12, 2:23, 2:25, 118:21, 175:16, 189:6, 195:10, 198:6, 201:25
department [2] - 207:14, 207:23
depicted [3] - 179:13, 189:8, 197:16
Depot [1] - 89:5
Dept [1] - 1:17
depth [1] - 58:10
described [1] - 7:21
deserves [1] - 212:6
deserving [1] - 209:10
design [42] - 44:15, 69:25, 70:1, 74:20, 76:3, 76:7, 76:21, 77:6, 78:10, 83:8, 83:21, 84:4, 100:11, 100:13, 114:4, 114:7, 114:16, 115:25, 116:13, 127:7, 132:18, 134:12, 134:15, 134:21, 137:17, 137:18, 140:9, 145:13, 149:1, 150:2, 150:3, 150:6, 150:14, 150:18, 150:23, 169:11, 170:7, 170:9, 170:24, 171:14, 171:16
design-wise [1] - 134:21
designated [1] - 197:20
Designations [1] - 5:11
designed [4] - 17:4, 17:9, 48:17, 48:19
designs [5] - 58:9, 114:20, 133:1, 133:3, 148:2
desire [1] - 101:12
destroyed [1] - 120:9
destroying [1] - 12:2
detail [2] - 21:9, 57:1
detailed [1] - 56:25
details [2] - 11:23, 12:7
deteriorating [1] - 95:7
determine [1] - 98:13
determined [1] - 188:19
determining [1] - 173:4
detrimental [2] - 29:22, 166:8
Development [3] - 175:15, 176:9, 182:20
diameter [1] - 201:16
Diane [3] - 1:9, 213:7, 213:18
die [1] - 196:23
died [2] - 192:5, 197:12
difference [5] - 24:12, 62:1, 63:21, 79:19, 167:5
differences [1] - 48:16
different [21] - 6:14, 15:18, 21:7, 34:20, 38:9, 39:21, 40:2, 60:5, 71:11, 97:10, 102:22, 104:11, 107:8, 108:4, 108:5, 109:8, 115:8, 156:4, 164:4, 167:12, 190:10
differentiate [1] - 23:22
differing [2] - 103:1, 136:23
dimension [3] - 26:1, 26:9, 52:22
dimensional [1] - 63:20
dimensionally [2] - 15:17, 63:19
dimensions [7] - 12:21, 33:5, 34:18, 34:22, 40:8, 126:14
diminished [1] - 58:6
diminishes [1] - 140:5
direct [8] - 20:12, 32:1, 73:6, 97:19, 97:22, 98:24, 98:25, 178:5
directed [1] - 81:12
directional [1] - 76:5
directly [2] - 80:7, 173:1
disadvantaged [1] - 174:20
disappear [2] - 26:24, 54:21
disclaimer [1] - 199:16
discretion [2] - 175:14, 201:24
discriminate [1] - 90:15
discrimination [1] - 90:19
discuss [2] - 91:15, 187:15
discussed [8] - 4:23, 8:10, 12:22, 18:24, 69:4, 134:19, 134:21, 203:6
discussing [1] - 65:2
Discussion [3] - 126:6, 184:13, 200:21
discussion [26] - 7:7, 10:3, 46:16, 47:1, 56:25, 62:22, 67:25, 81:14, 84:10, 123:24, 124:8, 143:5, 143:7, 145:24, 163:12, 165:3, 167:17, 168:6, 168:7, 177:1, 182:25, 183:5, 193:4, 193:12, 196:6, 198:21
discussions [4] - 7:25, 12:17, 74:3, 122:21
display [2] - 35:3, 90:21
displays [1] - 3:7
dispose [1] - 143:24
disrepair [1] - 185:24
distance [1] - 80:15
distinguish [1] - 139:23
distributed [1] - 118:18
district [13] - 18:9, 43:25, 67:8, 81:3, 81:11, 100:10, 102:7, 102:14, 114:16, 116:1, 116:13, 139:12, 169:11
District [5] - 74:23, 101:1, 113:4, 140:7, 168:20
districts [9] - 29:25, 41:4, 41:8, 50:9, 51:10, 57:4, 102:22, 103:24, 132:25
divided [1] - 185:21
Division [2] - 175:15, 176:10
docket [2] - 207:21, 208:3
document [4] - 118:17, 119:22, 120:5, 121:2
documentation [1] - 26:7
documents [4] - 118:19, 119:2, 119:8, 122:5
Doggett [2] - 197:4, 197:11
dollars [2] - 205:17, 209:23
done [25] - 4:17, 8:25, 9:4, 40:13, 42:1, 46:1, 55:10, 95:20, 105:9, 128:2, 128:4, 135:5, 135:7, 141:19, 151:8, 151:9, 157:12, 164:2, 165:24, 192:11, 201:23, 205:4, 207:3, 207:5, 209:12
door [57] - 14:21, 14:25, 112:24, 113:1, 113:9, 113:11, 115:4, 115:8, 116:11, 116:12, 119:23, 120:2, 121:9, 122:3, 124:16, 124:18, 125:12, 125:23, 127:12, 129:20, 130:13, 131:24, 132:5, 132:12, 132:18, 132:20, 132:23, 133:9, 133:16, 134:13, 134:24, 135:1, 135:6, 147:5, 147:16, 147:17, 147:18, 147:19, 147:21, 148:15, 148:24, 150:10, 150:12, 150:13, 150:15, 150:22, 151:11, 151:17, 154:21, 155:23, 162:16, 162:17, 164:12, 164:17, 164:20
doors [19] - 76:8, 80:3, 113:12, 114:25, 115:4, 121:13, 124:17, 125:10, 125:16, 125:24, 126:8, 126:20, 130:3, 132:23, 132:24, 133:24, 147:25, 148:1, 168:24
doorway [1] - 150:9
Doric [1] - 162:10
dormer [2] - 140:4, 147:3
double [20] - 17:3, 18:25, 23:9, 25:5, 28:21, 28:24, 29:1, 29:10, 29:15, 52:13, 69:2, 100:17, 120:5, 121:5, 121:8, 121:9, 133:19, 136:18, 137:3, 155:22
double-check [1] - 137:3
double-glazed [1] - 100:17
double-hung [10] - 17:3, 18:25, 23:9, 28:21, 28:24, 29:1, 29:10, 29:15, 52:13, 155:22
double-wide [3] - 121:5, 121:8, 121:9
down [16] - 24:24, 28:24, 42:15, 49:23,

90:9, 113:15, 133:1, 140:1, 141:13, 144:9, 144:16, 173:12, 174:2, 174:12, 178:9
downstairs [1] - 69:13
Downtown [1] - 190:4
downtown [2] - 16:25, 188:11
draft [4] - 204:5, 204:9, 205:5, 205:7
drain [1] - 173:22
draw [1] - 191:4
drawing [1] - 79:21
drawings [3] - 119:20, 130:9, 158:24
drawn [2] - 109:17, 142:9
drew [2] - 2:24, 119:19
DREW [1] - 1:18
drink [1] - 212:10
Drive [1] - 189:24
drive [1] - 177:16
driven [1] - 81:19
driveway [45] - 74:21, 98:1, 113:3, 113:14, 113:17, 115:9, 115:11, 115:22, 115:24, 116:3, 116:5, 116:6, 120:14, 121:8, 125:6, 125:11, 125:20, 126:2, 126:22, 128:10, 132:5, 133:5, 133:6, 133:20, 133:25, 135:2, 135:5, 135:10, 169:5, 170:6, 170:15, 170:20, 171:4, 171:11, 173:10, 173:11, 174:22, 175:3, 177:20, 177:25, 178:3, 180:24, 182:2, 183:13
driveways [6] - 115:17, 121:5, 169:15, 169:19, 170:16, 170:18
driving [1] - 177:8
drug [1] - 65:21
dry [3] - 119:6, 119:9, 131:18
due [4] - 58:22, 85:24, 113:22, 188:21
dug [1] - 173:17
Dunner [1] - 59:13
DUNNER [2] - 59:16, 62:5
duplicate [2] - 189:3, 195:9
durable [1] - 30:25
during [5] - 4:6, 148:12, 153:21, 171:2, 203:17
duty [1] - 196:24
DUVAL [1] - 213:4

E

early [3] - 136:25, 190:23, 197:13
earmarked [1] - 205:23
easement [2] - 74:25, 75:24
easier [6] - 18:3, 34:11, 104:13, 167:15, 199:22
east [2] - 79:23, 174:11
East [2] - 5:3, 103:8
eastern [1] - 197:3
easy [2] - 31:9, 50:22
eaves [1] - 186:10
economy [1] - 61:18
Ecumenical [2] - 188:11, 190:4
edge [1] - 70:3
Edgewood [1] - 5:4
editing [1] - 83:6
Edward [1] - 1:7
Edwards [1] - 172:17
EDWARDS [2] - 175:5, 176:16
effect [1] - 97:20
effectively [1] - 103:5
effectiveness [1] - 100:17
efficiency [2] - 86:3, 100:24
efficient [1] - 29:20
effort [2] - 104:19, 118:6
eight [4] - 86:18, 121:3, 121:8
eighth [2] - 37:15, 88:12
either [2] - 28:20, 71:11
elect [2] - 44:9, 72:23
element [2] - 190:21, 193:20
elevation [1] - 79:23
elevations [6] - 76:14, 76:17, 76:19, 77:1, 77:3, 149:22
email [8] - 32:24, 72:2, 120:3, 122:2, 122:6, 136:23, 155:16, 160:17
emailed [1] - 12:19
emancipation [1] - 185:19
employ [1] - 166:16
enclose [1] - 150:8
enclosure [2] - 148:16, 149:2
encompasses [1] - 209:1
encourages [2] - 114:17, 170:18
end [4] - 55:12, 83:12, 202:5, 212:18
ended [1] - 191:21
ends [1] - 151:1
energy [2] - 29:20, 100:24
engage [2] - 209:18, 210:4
engaged [1] - 211:14
engineer [3] - 119:16, 119:18, 130:9
engineering [1] - 35:5
enhance [2] - 60:24, 118:8
enhancing [1] - 61:23
ensure [1] - 181:12
entertain [12] - 7:2, 9:21, 41:20, 62:13, 62:22, 83:3, 91:10, 123:19, 176:21, 193:4, 195:24, 198:15
enthusiasm [1] - 57:3
entire [7] - 17:7, 29:8, 42:11, 48:14, 65:13, 69:6, 92:18
entirely [5] - 21:7, 64:16, 129:1, 181:16, 206:5
entirety [1] - 128:23
entry [2] - 150:22, 168:23
envision [1] - 52:4
epoxy [3] - 94:10, 94:11, 99:2
Epstein [30] - 2:16, 11:22, 12:9, 13:19, 14:11, 33:6, 40:7, 45:6, 46:13, 47:8, 64:4, 83:14, 84:22, 106:19, 110:3, 127:17, 127:20, 129:9, 132:4, 136:18, 151:14, 167:8, 175:13, 176:6, 178:12, 182:19, 193:1, 203:5, 203:15, 207:7
EPSTEIN [191] - 1:14, 2:16, 7:3, 9:23, 12:18, 15:9, 15:13, 18:20, 18:24, 19:9, 19:13, 20:2, 20:14, 20:19, 21:2, 21:6, 22:3, 22:14, 22:21, 22:25, 23:3, 23:11, 25:7, 25:10, 25:15, 25:23, 26:3, 26:14, 27:10, 27:15, 27:18, 27:25, 28:18, 29:16, 30:2, 30:6, 32:23, 33:11, 33:14, 33:17, 34:7, 34:15, 35:11, 35:24, 36:6, 36:9, 36:13, 36:24, 37:2, 37:16, 37:21, 37:24, 38:8, 38:22, 39:16, 39:20, 44:24, 45:23, 48:23, 49:13, 49:16, 50:2, 50:4, 51:6, 51:13, 52:10, 52:18, 53:17, 53:23, 54:3, 54:8, 54:15, 54:23, 62:24, 63:4, 64:9, 68:7, 69:19, 72:3, 72:6, 72:11, 80:22, 81:13, 82:10, 82:17, 83:4, 83:16, 83:20, 84:11, 91:14, 92:21, 93:5, 93:13, 93:17, 97:6, 97:14, 97:18, 98:12, 102:5, 103:16, 104:1, 106:15, 106:21, 107:1, 107:10, 107:15, 109:5, 109:16, 111:4, 121:25, 122:8, 122:13, 122:25, 123:4, 123:22, 123:25, 125:5, 125:19, 126:9, 128:15, 129:11, 129:14, 130:25, 131:3, 131:11, 136:13, 137:6, 138:11, 138:14, 143:2, 144:3, 145:5, 151:6, 153:10, 153:14, 153:22, 153:25, 154:9, 155:11, 155:18, 156:3, 156:9, 156:17, 157:7, 157:14, 159:6, 163:9, 163:13, 166:23, 167:11, 175:7, 175:23, 176:22, 177:3, 178:16, 178:24, 179:3, 179:9, 179:15, 179:19, 179:23, 180:6, 180:19, 181:14, 181:24, 182:14, 182:24, 191:11, 192:1, 192:14, 192:17, 193:5, 193:13, 196:1, 198:17, 199:1, 199:4, 199:25, 200:16, 202:13, 202:16, 202:22, 203:2, 203:8, 203:11, 203:19, 206:17, 208:18, 210:12, 211:15, 211:22
Epstein's [2] - 65:5, 67:1
Ernest [4] - 5:17, 85:4, 85:14, 87:20
especially [4] - 149:21, 177:11, 185:19, 193:15
essence [2] - 67:3, 127:6
essentially [2] - 132:17, 175:18
establish [1] - 210:19
estate [3] - 118:15, 118:19, 131:16
etched [1] - 150:17
evaluate [1] - 44:4
evaluated [1] - 188:7
evaluating [1] - 57:1
evidence [7] - 12:13, 77:18, 164:15, 183:15, 189:5, 193:15, 198:5
ex [8] - 7:25, 12:16, 74:2, 112:15, 139:2, 146:14, 168:5, 168:6
exact [12] - 14:22, 14:25, 17:17, 17:20, 18:15, 19:7, 24:9, 24:10, 25:5, 38:4, 42:13, 167:10
exactly [6] - 24:23, 28:2, 39:6, 48:15, 70:10, 107:16
examine [1] - 148:10
example [9] - 15:11, 27:6, 58:13, 76:16, 91:21, 91:24, 159:17, 182:1, 209:12
examples [4] - 121:4,

121:7, 133:22
except [1] - 69:13
exception [2] - 43:14, 59:19
exceptions [1] - 44:22
excessive [1] - 85:24
excited [5] - 65:4, 186:15, 194:8, 211:17, 211:21
excuse [1] - 173:7
exhaust [1] - 207:25
exhibit [3] - 123:2, 179:18, 179:19
exist [1] - 94:15
existed [1] - 170:19
existing [32] - 12:5, 17:11, 17:12, 22:1, 35:21, 48:20, 52:6, 55:3, 69:6, 69:14, 74:19, 77:3, 85:16, 111:23, 113:21, 114:11, 115:22, 116:4, 116:5, 120:5, 120:9, 135:1, 137:14, 138:15, 147:1, 147:8, 147:19, 150:14, 168:25, 169:2, 170:2, 170:23
exists [1] - 88:9
exits [1] - 9:16
expand [3] - 98:19, 113:8, 113:13
expanding [1] - 135:6
expansion [9] - 99:1, 113:17, 114:25, 115:6, 115:10, 115:24, 116:3, 116:6, 133:5
expense [1] - 69:11
expensive [2] - 17:22, 105:13
experience [2] - 69:20, 137:12
expert [3] - 14:7, 58:24
expire [1] - 206:3
explained [4] - 14:1, 51:7, 66:24, 77:11
explaining [1] - 32:5
explanation [1] - 65:1
expose [1] - 151:1
exposed [6] - 22:6, 35:23, 47:6, 149:19, 151:20, 177:13
exposure [3] - 97:9, 98:17, 98:25
expressed [4] - 13:24, 14:12, 46:18, 67:7
expression [1] - 76:5
extent [2] - 52:21, 151:21
exterior [14] - 47:11, 59:25, 63:12, 63:16, 64:7, 75:10, 85:15, 85:19, 85:21, 87:1, 97:12, 124:4, 129:1, 141:19
external [1] - 47:1
extra [3] - 52:7, 53:14, 69:10
extrusion [1] - 31:14
eyesore [1] - 61:7

F

fabric [2] - 100:21, 114:20
face [1] - 186:9
facilitate [1] - 196:17
facing [2] - 145:1, 170:1
fact [8] - 42:21, 102:6, 113:2, 128:9, 139:18, 158:2, 166:15, 192:24
factors [1] - 132:10
fade [1] - 31:16
fading [1] - 31:18
failure [7] - 33:4, 45:2, 45:3, 45:4, 107:22, 145:12, 180:10
failure) [4] - 38:13, 63:11, 64:2, 183:3
fair [1] - 64:16
Fairgounds [2] - 194:21, 195:13
Fairgrounds [3] - 194:24, 196:3, 196:13
fall [5] - 119:7, 202:1, 203:23, 204:2, 204:24
fall-ish [1] - 204:24
falling [5] - 29:21, 57:15, 61:1, 61:12, 144:10
familiar [1] - 185:8
families [1] - 197:6
family [1] - 197:5
fan [1] - 66:2
fanciful [1] - 208:20
far [8] - 49:22, 61:2, 84:13, 124:12, 130:21, 133:9, 134:9, 164:12
Fashions [1] - 212:11
favor [12] - 7:10, 10:7, 84:23, 111:22, 146:3, 167:21, 184:4, 186:13, 194:10, 196:7, 198:25, 199:6
favorite [1] - 205:12
feature [1] - 193:20
features [12] - 14:12, 76:10, 115:15, 115:19, 140:5, 140:6, 144:5, 150:4, 150:24, 169:13, 169:17, 170:13
federal [1] - 209:23
feedback [1] - 134:8
feet [11] - 113:14, 113:16, 130:6, 133:6, 135:1, 135:2, 137:20, 171:5, 173:12, 201:20
fell [1] - 185:23
felt [1] - 191:3
fence [9] - 80:15, 84:16, 169:9, 180:19, 180:22, 180:25, 181:9, 182:3, 182:5
fencing [12] - 74:19, 75:19, 169:8, 171:12, 171:14, 171:16, 180:3, 180:15, 180:17, 181:5, 182:6, 182:8
few [9] - 12:19, 42:1, 60:17, 89:12, 89:21, 122:22, 159:14, 187:12, 188:4
fewer [1] - 83:15
fiber [4] - 147:8, 148:13, 151:19, 160:6
fidelity [2] - 101:17, 101:19
figure [2] - 18:12, 67:2
Figuri [1] - 119:24
filed [1] - 152:24
fill [1] - 3:12
films [1] - 100:2
final [6] - 52:22, 109:11, 135:22, 182:22, 201:6, 205:7
finally [3] - 75:18, 147:22, 150:19
finances [1] - 18:2
fine [8] - 121:12, 136:16, 164:19, 167:13, 175:2, 202:20, 204:6, 211:10
fines [1] - 137:8
Fingerlake [5] - 194:21, 195:2, 195:12, 196:2, 196:12
finish [2] - 120:24, 129:10
finishes [1] - 58:9
fins [2] - 42:12, 42:14
fire [2] - 176:23, 185:15
firefighter [1] - 196:23
Firefighter [1] - 196:22
firefighters [2] - 196:19, 197:20
Firefighters [1] - 196:20
first [29] - 3:5, 4:12, 11:4, 11:11, 13:18, 14:1, 18:8, 22:12, 28:12, 30:21, 41:18, 47:18, 50:15, 56:24, 75:5, 112:13, 117:9, 125:3, 136:10, 137:20, 141:13, 148:23, 150:7, 160:3, 161:22, 187:20, 196:22, 204:18, 210:4
fit [7] - 48:20, 90:11, 125:9, 125:15, 127:11, 133:23, 159:23
five [12] - 4:25, 7:22, 8:6, 10:14, 41:2, 89:14, 89:17, 89:21, 132:21, 185:15, 205:24, 212:5
five-year [1] - 212:5
fix [5] - 16:24, 31:10, 62:3, 118:14, 144:24
fixed [1] - 124:2
fixing [2] - 118:10, 124:2
flair [1] - 133:7
flat [2] - 22:8
Fletcher [1] - 185:25
flexible [1] - 96:11
flip [1] - 19:17
flipped [1] - 172:6
floor [7] - 68:22, 71:19, 147:19, 148:23, 150:7, 150:9, 164:18
floors [1] - 94:14
Florida [12] - 1:9, 1:10, 13:10, 16:10, 24:1, 50:13, 87:21, 117:5, 140:22, 152:9, 213:7, 213:18
FLORIDA [1] - 213:3
Florida's [1] - 186:1
flowers [1] - 34:8
foam [1] - 53:13
focus [1] - 61:20
focused [1] - 3:20
folks [1] - 190:24
follow [4] - 104:17, 106:20, 124:11, 204:3
follow-up [1] - 106:20
follow-ups [1] - 204:3
following [1] - 76:3
follows [2] - 102:14, 149:6
foot [1] - 130:12
Force [1] - 204:3
force [1] - 204:17
foregoing [1] - 213:9
foremost [1] - 13:18
forget [3] - 37:10, 73:16, 210:25
form [3] - 76:9, 107:7, 143:25
forth [7] - 16:23, 25:4, 57:19, 102:19, 120:11, 190:9, 207:20
forward [20] - 13:6, 32:24, 33:3, 42:25, 55:16, 65:7, 78:15, 87:4, 87:13, 110:15, 116:15, 116:24, 130:16, 140:11, 145:18, 151:2, 152:4, 171:18, 195:13, 198:7
forwarded [1] - 46:10
foundation [1] - 147:4
four [5] - 3:1, 80:1, 89:4, 132:20, 160:22
fourth [1] - 90:2
FPR [1] - 1:9
frame [44] - 17:11, 23:9, 25:6, 27:3, 29:5, 29:13, 31:23, 36:22, 37:16, 38:22, 39:3, 39:4, 39:5, 47:1, 47:6, 47:9, 47:17, 48:15, 48:20, 49:24, 51:18, 52:3, 52:7, 52:14, 52:17, 52:19, 52:23, 53:20, 54:4, 54:20, 55:3, 63:7, 63:8, 63:25, 64:6, 66:24, 68:24, 69:6, 75:1, 90:23, 147:2, 156:20, 205:9
frame/jamb [1] - 57:22
framing [1] - 39:14
Frazier [1] - 191:20
fresh [1] - 181:23

front [27] - 18:16, 35:4, 35:9, 85:20, 90:5, 95:21, 108:6, 147:3, 147:5, 147:16, 148:14, 148:24, 149:22, 150:13, 150:14, 153:5, 158:17, 159:19, 159:23, 162:1, 164:12, 169:9, 170:1, 173:19, 180:25, 181:12, 182:4
frontage [2] - 75:22, 188:24
full [12] - 6:20, 17:24, 26:23, 28:7, 28:11, 37:22, 43:6, 68:18, 68:20, 90:10, 173:11, 175:3
function [1] - 77:5
functioning [1] - 70:12
fund [1] - 204:15
funding [1] - 205:13
furthermore [4] - 114:12, 149:15, 150:16, 169:25
fusion [1] - 51:1
future [2] - 81:17, 179:3
FYI [1] - 82:14

G

gala [2] - 208:9, 211:4
galas [1] - 208:2
galvanized [1] - 201:20
gaps [1] - 113:22
garage [43] - 79:17, 80:3, 112:25, 113:9, 113:12, 113:19, 114:25, 115:3, 115:4, 118:9, 118:18, 118:22, 119:1, 119:2, 119:7, 119:12, 119:22, 119:23, 120:1, 121:9, 121:13, 122:3, 124:15, 124:17, 124:18, 125:10, 125:12, 125:15, 125:21, 125:24, 126:8, 127:12, 129:20, 131:17, 131:24, 132:5, 132:12, 132:23, 132:24, 133:24, 134:18, 135:1, 135:6
garages [1] - 129:3
gasoline [1] - 176:23
gates [1] - 74:20
geeking [1] - 111:21
gem [1] - 191:5
Gem [2] - 155:13, 155:19
gems [1] - 191:1
General [2] - 1:19, 2:14
general [3] - 3:5, 6:16, 103:2
generally [9] - 4:10, 41:13, 43:21, 44:3, 66:1, 76:1, 183:14, 183:22
generation [1] - 90:3
gentleman [1] - 58:22
giant [2] - 17:24, 39:2
given [4] - 125:22, 178:21, 182:1, 193:15
glance [1] - 30:21
glass [30] - 29:5, 48:5, 52:6, 57:14, 58:18, 88:10, 88:13, 88:14, 88:16, 90:16, 90:25, 95:10, 95:15, 100:1, 100:2, 100:19, 105:11, 105:19, 105:24, 106:10, 106:22, 107:4, 107:7, 107:8, 107:11, 107:17, 108:21, 150:17
glazed [1] - 100:17
glazing [1] - 95:2
glory [1] - 191:1
goals [1] - 191:6
Google [1] - 162:6
gotcha [2] - 37:5, 205:10
grab [1] - 73:17
grandfather [1] - 90:3
grandparents [1] - 98:1
gravel [1] - 169:20
great [14] - 34:13, 47:14, 90:3, 123:7, 128:12, 175:13, 183:9, 203:20, 205:21, 207:8, 208:21, 208:24, 211:20, 212:14
great-grandfather [1] - 90:3
Gregory [1] - 3:3
grew [1] - 186:14
ground [3] - 119:15, 183:16, 200:20
Group [1] - 172:18
group [2] - 9:11, 190:24
grumpy [1] - 29:18
guarantee [1] - 24:19
guess [16] - 23:3, 27:6, 40:23, 42:3, 48:23, 49:19, 55:17, 62:21, 79:22, 83:6, 83:25, 104:9, 128:1, 154:5, 177:19, 204:21
guideline [1] - 103:20
guidelines [26] - 76:3, 100:11, 100:13, 101:17, 101:20, 101:21, 102:2, 102:7, 103:24, 114:5, 114:16, 115:14, 116:13, 127:8, 132:14, 132:18, 140:9, 149:5, 150:14, 169:11, 170:8, 170:9, 171:15, 177:25, 178:8
guy [2] - 105:17, 212:3
guys [14] - 9:5, 9:14, 13:24, 29:9, 34:25, 36:2, 49:9, 65:11, 130:22, 137:7, 145:9, 209:20, 211:2, 212:11

H

half [19] - 19:3, 20:16, 22:8, 23:6, 23:7, 24:24, 26:21, 35:15, 36:1, 52:24, 53:2, 53:14, 65:13, 69:23, 92:6, 99:19, 153:4, 157:13, 200:5
hallway [1] - 4:15
hand [18] - 3:21, 13:11, 16:12, 56:17, 79:3, 85:6, 85:22, 87:23, 117:10, 117:21, 132:6, 133:4, 140:25, 152:12, 161:15, 187:2
handled [1] - 177:15
handout [1] - 178:22
hang [1] - 190:1
happy [5] - 71:21, 111:15, 186:16, 190:1, 191:9
hard [6] - 19:19, 28:6, 48:16, 190:25, 194:7, 212:2
hard-working [1] - 212:2
harder [1] - 28:13
hardscaping [3] - 74:21, 75:18, 115:13
hardware [1] - 25:20
harm [1] - 107:20
hate [2] - 65:20, 200:4
head [5] - 9:1, 37:17, 53:19, 63:25, 104:22
heads [2] - 181:19, 181:20
hear [10] - 11:8, 39:23, 66:10, 74:11, 93:7, 112:19, 139:6, 168:10, 187:15, 192:13
heard [5] - 4:20, 5:7, 7:18, 10:20, 124:7
Hearing [1] - 1:8
hearing [23] - 8:4, 9:21, 11:5, 62:13, 74:10, 83:3, 85:4, 85:10, 91:10, 92:20, 101:16, 112:19, 123:19, 139:6, 141:25, 143:1, 146:17, 163:8, 168:10, 176:20, 176:21, 196:5, 212:3
hearings [1] - 191:18
heart [1] - 94:13
heartburn [1] - 40:11
heat [2] - 85:24, 129:5
hefty [1] - 130:8
heights [1] - 40:2
held [7] - 1:6, 35:3, 37:5, 103:20, 126:6, 184:13, 200:21
help [9] - 14:16, 16:24, 18:6, 32:9, 32:12, 95:19, 121:16, 191:4, 210:4
helpful [3] - 19:24, 51:9, 64:23
helping [1] - 118:7
helps [2] - 95:18, 98:10
hence [1] - 160:20
Henry [5] - 196:16, 196:19, 198:2, 198:19, 199:12
hereby [1] - 2:3
Herschel [1] - 201:18
hesitation [1] - 48:25
Heston [1] - 16:9
hi [3] - 13:8, 79:11, 117:3
hide [1] - 63:16
high [1] - 58:19
higher [2] - 86:23, 88:17
highlighted [3] - 36:16, 36:18, 101:7
highly [2] - 115:15, 169:13
hipped [6] - 75:2, 75:8, 76:9, 140:4, 147:3, 168:23
hired [1] - 154:6
historic [81] - 18:8, 25:16, 29:24, 33:10, 43:24, 45:18, 45:19, 45:20, 46:6, 46:20, 50:9, 51:10, 52:13, 54:1, 54:11, 57:4, 57:8, 57:23, 58:4, 58:7, 58:14, 58:23, 59:1, 59:2, 60:7, 60:20, 66:3, 66:6, 67:7, 76:10, 76:23, 81:3, 85:17, 86:5, 87:2, 89:11, 100:10, 100:21, 100:24, 101:9, 101:11, 102:22, 102:23, 103:24, 106:23, 114:16, 114:17, 114:20, 124:6, 132:25, 139:12, 145:4, 146:23, 147:13, 147:24, 148:3, 148:4, 148:18, 148:19, 149:9, 149:13, 149:17, 149:18, 149:19, 150:3, 150:4, 150:5, 150:9, 161:24, 164:6, 164:9, 169:11, 170:12, 170:16, 183:7, 185:1, 185:11, 188:23, 195:5, 204:5
Historic [13] - 2:4, 5:11, 74:23, 84:7, 101:1, 111:1, 113:4, 140:7, 148:6, 168:20, 204:10, 204:14, 206:19
HISTORIC [1] - 1:2
historical [6] - 41:4, 41:8, 121:11, 164:14, 191:15, 193:24
historically [9] - 25:20, 63:23, 69:21, 77:12, 115:20,

169:17, 169:23, 170:19, 190:21
Hoff [3] - 2:15, 13:24, 145:7
HOFF [1] - 1:13
Hogan [1] - 1:8
hold [5] - 24:3, 24:17, 35:8, 143:11, 166:18
holds [1] - 80:12
hole [1] - 48:3
holistic [5] - 44:25, 45:6, 50:20, 131:5, 206:5
Home [1] - 89:5
home [9] - 29:22, 33:10, 38:5, 43:8, 61:22, 85:25, 86:1, 97:10, 177:17
homeowner [1] - 61:13
homes [6] - 15:25, 16:25, 19:2, 42:8, 94:17, 209:4
honest [1] - 211:19
honor [3] - 106:12, 191:20, 193:19
hope [5] - 61:8, 102:3, 166:20, 186:18, 194:2
hopeful [2] - 14:9, 15:2
hopes [1] - 16:24
hot [2] - 98:3, 98:4
hours [2] - 3:9, 192:10
house [52] - 14:5, 14:21, 15:1, 17:6, 19:14, 20:4, 29:1, 38:24, 39:3, 42:7, 43:7, 47:9, 47:23, 48:11, 55:9, 59:18, 89:7, 89:25, 90:2, 90:4, 90:5, 90:6, 90:9, 90:10, 90:14, 94:4, 94:13, 94:25, 95:21, 97:21, 101:11, 104:9, 104:12, 104:21, 105:2, 105:3, 144:5, 145:4, 145:13, 153:3, 153:6, 154:21, 157:4, 157:17, 157:25, 161:1, 161:2, 163:24, 177:7, 182:4, 212:4
houses [9] - 14:19, 17:17, 42:15, 47:15, 60:13, 61:5, 62:3, 124:9, 186:9
HPC [1] - 209:24
Hubbard [3] - 5:25, 146:13, 146:22
humidity [1] - 96:18
hundred [4] - 35:14, 66:21, 94:8, 205:16
hundred-year-old [1] - 94:8
hung [20] - 17:3, 18:25, 23:9, 28:20, 28:21, 28:24, 29:1, 29:2, 29:10, 29:12, 29:15, 31:22, 32:5, 49:10, 52:5, 52:13, 155:14, 155:20, 155:22
Hurst [1] - 78:25
HURST [7] - 79:4, 79:9, 79:11, 80:25, 81:23, 82:16, 82:23
hypothetically [1] - 204:14

I

idea [5] - 51:24, 89:16, 142:12, 209:13, 211:10
ideal [2] - 66:7, 183:8
ideally [1] - 65:17
ideas [2] - 130:16, 208:3
identical [8] - 14:22, 18:17, 39:11, 39:15, 68:21, 69:8, 69:16, 167:9
identified [1] - 149:13
identity [1] - 17:21
ill [1] - 157:22
imagery [1] - 116:6
images [1] - 49:1
imagine [1] - 58:25
imitate [1] - 114:11
immediately [1] - 17:15
impact [1] - 47:17
impetus [1] - 200:13
implied [1] - 182:17
important [5] - 3:16, 58:3, 68:4, 194:8, 207:3
impression [2] - 47:6, 52:20
improve [1] - 204:19
improvement [2] - 6:19, 201:13
improving [1] - 100:23
inaccessible [1] - 184:1
inappropriate [4] - 58:8, 115:1, 115:13, 170:7
inaudible [10] - 23:17, 27:24, 35:20, 37:6, 73:2, 92:18, 110:11, 110:12, 156:1, 156:17
inaudible) [5] - 20:10, 22:13, 27:14, 27:17, 159:3
inch [23] - 19:3, 20:15, 20:24, 22:8, 23:5, 23:7, 24:11, 24:20, 24:25, 35:15, 35:18, 35:20, 36:1, 37:15, 52:24, 53:2, 53:7, 53:14, 53:19, 62:2, 69:23, 88:12
inches [13] - 26:16, 37:12, 37:24, 47:22, 47:23, 48:19, 95:9, 113:15, 113:16, 130:6, 137:19, 137:20
inclined [3] - 38:17, 108:8, 108:10
include [4] - 139:13, 146:23, 147:6, 148:8
included [6] - 12:3, 12:24, 72:12, 89:8, 160:20
includes [4] - 6:12, 6:17, 85:18, 147:20
including [5] - 3:11, 3:23, 9:24, 74:21, 168:18
incoming [1] - 190:4
incompatible [5] - 78:3, 140:9, 147:25, 148:5, 149:1
inconsistent [7] - 139:20, 140:8, 149:4, 150:2, 150:13, 170:7, 170:15
increase [1] - 100:20
Independent [1] - 189:24
indicate [1] - 4:13
indicated [3] - 118:22, 162:22, 169:10
indicates [2] - 118:18, 119:8
indicating [12] - 19:7, 21:12, 21:24, 22:5, 23:12, 24:5, 25:17, 26:17, 28:11, 38:4, 53:6, 59:8
Indicating [8] - 8:7, 13:5, 56:10, 85:8, 87:12, 116:22, 140:17, 152:3
indicating) [10] - 20:25, 21:21, 22:19, 22:20, 22:22, 22:24, 26:16, 28:4, 31:15, 49:12
indication [1] - 58:20
indicator [1] - 181:6
indistinguishable [1] - 46:19
indiv [1] - 11:21
individual [1] - 127:4
industry [1] - 81:6
infill [2] - 147:19, 164:18
infiltration [1] - 58:19
information [27] - 6:16, 12:14, 12:22, 40:4, 51:9, 66:12, 82:18, 98:15, 98:21, 107:25, 108:3, 108:6, 108:10, 131:6, 138:15, 144:10, 144:14, 154:18, 156:10, 156:22, 156:25, 160:18, 160:24, 164:2, 192:18, 199:13, 202:7
Information [1] - 203:24
Ingleside [1] - 121:6
initial [2] - 178:4, 204:18
initiate [2] - 165:14, 199:17
Initiated [2] - 5:21, 112:12
initiated [1] - 136:15
initiating [1] - 206:1
inquiry [3] - 137:1, 180:11, 203:25
insert [1] - 17:3
inside [6] - 55:2, 59:25, 96:11, 129:10, 150:25, 160:12
install [5] - 18:3, 38:11, 85:14, 157:25, 169:4
installation [14] - 37:18, 40:10, 49:5, 54:10, 54:11, 63:9, 85:19, 86:18, 100:15, 114:9, 128:10, 147:25, 148:5, 178:1
installed [14] - 15:25, 33:9, 38:5, 38:10, 91:25, 93:9, 93:10, 136:22, 136:24, 148:25, 150:12, 151:12, 157:5, 171:1
installer [2] - 24:6, 52:25
installing [1] - 66:2
instance [1] - 103:22
instances [1] - 169:19
instead [7] - 65:13, 115:4, 124:17, 138:6, 158:21, 171:1, 171:5
instrumental [1] - 118:7
insurance [3] - 81:6, 81:17, 82:2
intact [2] - 57:4, 149:20
intensive [1] - 101:14
intentions [1] - 157:22
interest [3] - 13:25, 67:7, 207:19
interested [4] - 40:21, 83:15, 135:6, 180:22
interesting [1] - 105:17
interests [1] - 210:11
Interior [3] - 57:25, 58:17, 170:10
interior [4] - 39:7, 57:18, 58:13, 168:21
Internet [1] - 105:12
interpretations [1] - 103:4
interrupt [1] - 25:11
interruption [2] - 14:15, 126:5
interstate [1] - 185:20
introduce [2] - 114:10, 114:24
introductions [1] - 2:9
intrusion [2] - 86:6, 119:11
investing [1] - 43:11
invite [1] - 203:18
invited [1] - 208:9
involved [3] - 177:11, 197:9
iPhone [1] - 33:4
iron [7] - 58:15, 88:16, 105:10, 105:23, 107:5, 107:8, 107:14
ironed [1] - 207:17
ish [1] - 204:24
issue [21] - 3:20, 9:13, 11:16, 64:6, 70:20, 70:25, 71:2, 71:5, 71:6, 71:15, 88:23, 127:25, 129:18, 136:20, 142:23,

165:25, 173:5, 173:14, 195:19, 205:4, 210:8
issued [4] - 11:15, 136:19, 141:15, 153:19
issues [6] - 99:4, 134:5, 165:8, 177:8, 207:13, 207:17
it'll [1] - 95:19
Item [2] - 5:25, 204:2
item [23] - 4:18, 5:8, 6:6, 9:7, 9:18, 12:17, 56:9, 62:10, 62:16, 73:21, 73:24, 82:25, 85:2, 91:7, 92:20, 123:16, 138:19, 138:24, 139:7, 146:12, 167:17, 187:6, 201:1
items [22] - 3:14, 4:10, 4:13, 4:18, 4:21, 4:25, 5:7, 5:15, 5:22, 6:15, 7:17, 7:22, 8:1, 8:6, 8:9, 10:4, 10:14, 10:20, 127:14, 201:13, 203:23, 204:1
iterated [1] - 114:15
iterates [2] - 115:15, 169:12
iteration [2] - 207:10, 208:5
itself [9] - 12:4, 36:19, 45:10, 47:21, 52:3, 52:17, 62:6, 103:7, 119:5

J

JACKSONVILLE [1] - 1:1
Jacksonville [23] - 1:9, 2:4, 13:10, 16:10, 59:14, 61:19, 87:21, 89:12, 117:5, 140:22, 148:6, 152:9, 162:2, 185:11, 194:24, 195:3, 195:5, 196:23, 197:2, 197:6, 197:24, 206:21, 210:24
jamb [6] - 37:17, 51:18, 52:16, 53:6, 53:19, 63:25
jamb/frame [1] - 63:25
January [1] - 116:7
Jesse [4] - 15:5, 15:24, 16:7, 16:20
JHPC [2] - 6:17, 199:15
job [4] - 55:5, 55:6, 108:2, 203:21
Joel [1] - 206:22
John [1] - 197:10
Johns [3] - 5:16, 74:15, 79:1
JOHNSON [11] - 1:18, 2:24, 85:12, 91:23, 92:3, 92:8, 100:8, 102:16, 103:25, 128:7, 139:8
Johnson [1] - 2:24
joints [3] - 50:21, 98:19, 99:2
judicial [3] - 7:24, 72:14, 74:1
JULIA [1] - 1:14
Julia [1] - 2:16
July [1] - 62:19
jump [1] - 119:23
June [3] - 122:23, 122:24, 197:2
justification [1] - 116:3
justify [2] - 114:14, 115:10

K

Keep [1] - 210:24
keep [15] - 3:19, 17:20, 29:11, 41:4, 57:4, 60:20, 61:10, 68:21, 90:8, 173:5, 173:15, 173:20, 174:2, 174:9, 174:12
keeper [1] - 36:12
keeping [1] - 125:10
Kennelly [1] - 141:14
kept [1] - 4:7
kidding [4] - 172:6, 172:7, 172:13, 172:15
Kim [3] - 56:15, 161:13, 184:25
kind [57] - 18:1, 18:25, 19:4, 20:7, 25:25, 26:13, 31:25, 34:2, 35:12, 35:13, 38:1, 40:5, 40:7, 40:14, 41:12, 41:18, 43:11, 43:13, 46:23, 47:10, 48:21, 50:22, 51:23, 55:13, 55:17, 61:18, 65:25, 66:1, 81:15, 95:19, 97:16, 103:4, 103:17, 104:3, 104:11, 104:17, 104:22, 104:23, 105:20, 105:21, 125:8, 126:18, 131:12, 132:6, 157:5, 157:16, 163:14, 165:20, 190:17, 191:21, 200:13, 200:19, 202:18, 204:23, 205:18, 206:4
known [2] - 197:5, 197:10
Koehler [1] - 140:21
KOEHLER [7] - 141:1, 141:6, 141:8, 142:1, 142:8, 142:13, 142:20

L

labeled [2] - 36:7, 36:14
Lagoon [1] - 59:14
Land [1] - 201:9
landed [1] - 81:15
landmark [4] - 7:17, 197:17, 197:21, 201:7
landmarking [2] - 103:21, 202:11
landmarks [2] - 102:22, 195:6
Lane [1] - 140:22
Langstaff [4] - 117:4, 117:6, 129:24, 136:3
LANGSTAFF [41] - 117:11, 117:16, 117:18, 117:20, 118:1, 118:4, 118:13, 120:23, 121:1, 121:16, 121:21, 122:4, 122:11, 122:17, 123:3, 123:6, 123:13, 124:24, 125:1, 129:22, 129:25, 130:4, 130:15, 130:19, 131:10, 131:14, 131:23, 136:2, 136:8, 136:11, 137:9, 137:25, 138:2, 138:5, 138:7, 138:9, 138:13, 138:17, 138:20, 138:22, 138:23
lap [9] - 113:9, 113:10, 147:4, 147:10, 147:11, 148:19, 149:19, 149:25, 151:20
large [4] - 48:5, 124:18, 127:3, 174:13
Large [1] - 1:10
largely [2] - 149:20, 169:1
larger [8] - 25:18, 26:5, 35:13, 35:16, 75:16, 126:21, 126:23, 133:9
largest [1] - 185:10
last [24] - 6:15, 11:20, 13:22, 18:14, 28:15, 31:19, 46:15, 51:7, 65:4, 98:18, 99:19, 153:3, 157:12, 162:21, 187:25, 190:7, 198:4, 201:12, 203:6, 204:21, 205:11, 207:9, 208:6, 208:18
latter [2] - 136:25, 137:2
Lauren [10] - 12:19, 13:9, 16:22, 18:7, 19:1, 28:15, 34:19, 38:6, 40:24, 55:9
law [1] - 197:9
lawbreakers [1] - 34:5
leadership [2] - 207:14, 207:22
leading [1] - 173:1
leaning [3] - 40:7, 46:24, 103:17
learned [2] - 111:20, 164:7
learning [1] - 211:16
least [5] - 35:15, 46:7, 144:25, 162:21, 204:13
leave [4] - 10:15, 10:18, 45:1, 177:14
Lee [4] - 95:10, 105:8, 109:13
left [13] - 2:10, 22:6, 85:22, 90:5, 92:14, 119:25, 122:23, 130:1, 164:21, 169:5, 174:13, 186:6, 206:7
left-hand [1] - 85:22
legislation [3] - 6:18, 198:1, 201:5
Leslie [1] - 140:21
less [5] - 31:7, 80:5, 98:17, 103:2, 130:11
Letter [1] - 5:6
letter [8] - 5:14, 6:12, 184:19, 185:7, 186:18, 187:9, 187:11, 204:16
letting [1] - 209:8
level [3] - 47:11, 86:19, 162:16
Lewis [1] - 78:25
Lewisville [2] - 185:17, 185:23
library [2] - 208:8, 208:12
lieu [2] - 173:11, 183:11
life [5] - 17:1, 31:18, 51:1, 94:17, 199:21
light [19] - 85:24, 86:10, 86:14, 86:19, 86:22, 90:8, 94:3, 94:4, 94:25, 95:5, 96:6, 96:14, 105:22, 106:7, 119:10, 128:17, 128:24, 132:21, 134:15
lighter [1] - 100:7
lights [4] - 75:6, 133:8, 147:5, 147:17
limit [2] - 45:13, 76:15
limitation [1] - 100:1
limited [1] - 86:22
limiting [1] - 98:25
line [7] - 53:5, 108:23, 167:4, 174:3, 174:21, 180:20, 196:23
lines [3] - 31:19, 42:19, 173:18
link [1] - 80:15
Lisa [1] - 59:13
list [4] - 131:17, 184:21, 190:13, 204:5
listed [3] - 4:12, 5:15, 186:1
listening [2] - 46:25, 59:16
lists [1] - 159:14
literally [1] - 119:15
live [2] - 29:24, 89:20
lived [1] - 94:17
LM-25-07 [2] - 4:19, 7:17
local [2] - 197:21, 201:7
located [12] - 74:14, 85:14, 112:23, 113:5, 139:9, 146:21, 168:16, 168:21, 170:18, 175:16, 195:6, 197:18
location [13] - 74:19,

74:20, 75:18, 84:1, 134:24, 169:8, 170:16, 170:25, 171:10, 171:16, 180:3, 189:9, 197:16
locations [1] - 85:24
Locke [1] - 197:11
logic [3] - 104:16, 104:24, 105:1
longevity [1] - 18:4
look [63] - 11:24, 15:17, 16:1, 17:12, 17:20, 18:4, 18:17, 20:5, 20:9, 20:13, 21:7, 21:21, 26:4, 27:11, 27:13, 28:2, 30:21, 31:23, 36:21, 39:15, 40:1, 40:16, 52:12, 53:16, 53:25, 60:1, 60:3, 60:6, 60:9, 60:23, 60:25, 61:9, 61:10, 61:11, 64:14, 65:6, 68:21, 68:23, 68:25, 69:3, 69:8, 69:15, 79:18, 81:24, 88:7, 89:3, 92:2, 99:16, 99:20, 124:13, 126:11, 132:13, 133:19, 144:7, 155:9, 156:21, 157:9, 157:10, 158:5, 158:16, 180:2
looked [4] - 19:9, 105:11, 105:18, 145:23
looking [38] - 20:2, 20:3, 23:11, 25:25, 27:20, 29:4, 36:8, 41:5, 43:9, 44:5, 47:4, 48:1, 49:20, 49:24, 50:20, 60:2, 63:7, 68:25, 69:9, 69:12, 99:6, 99:8, 99:11, 107:24, 126:18, 132:11, 132:17, 141:25, 155:10, 159:11, 174:3, 174:12, 174:13, 193:23, 201:19, 202:3, 208:15
looks [29] - 15:10, 22:4, 23:5, 23:6, 23:8, 23:12, 26:4, 27:17, 31:1, 31:13, 31:23, 31:24, 33:9, 38:9, 39:11, 47:10, 48:11, 50:20, 61:3, 63:22, 99:14, 102:1, 126:15, 126:17, 126:22, 133:21, 133:25, 136:24, 155:24
LOPERA [29] - 1:19, 2:13, 9:6, 19:22, 30:16, 70:15, 70:19, 70:25, 71:22, 72:8, 72:15, 92:19, 143:14, 143:20, 167:7, 167:12, 172:11, 178:10, 178:23, 179:6, 179:13, 179:17, 181:17, 181:22, 182:9, 182:13, 182:18, 192:25, 200:10
Lopera [1] - 2:13
lopsided [1] - 133:21
lose [2] - 29:7, 200:3
loss [1] - 150:4
lost [3] - 14:9, 105:3, 185:15
Lotto [1] - 179:9
love [6] - 15:19, 60:22, 144:25, 193:22, 208:3, 212:10
LOVE [16] - 1:15, 2:20, 7:6, 10:2, 46:12, 64:3, 84:9, 100:4, 101:10, 101:21, 127:19, 143:4, 144:18, 196:4, 198:20, 211:10
Love [2] - 2:20, 101:18
low [6] - 88:16, 105:10, 107:4, 107:5, 107:8, 107:14
Low [3] - 100:19, 106:22, 107:13
low-E [1] - 107:4
Low-E [3] - 100:19, 106:22, 107:13
low-iron [2] - 88:16, 105:10
lower [8] - 95:2, 100:3, 105:18, 105:24, 106:4, 107:4, 150:25, 160:12
lowers [2] - 105:21, 106:8
lull [1] - 207:1
lunch [2] - 200:2, 200:3
lunches [1] - 200:6
lunchtime [1] - 200:9

M

M/N [1] - 204:2
ma'am [4] - 50:25, 59:9, 59:15, 175:5
Madam [1] - 19:25
mailer [1] - 204:16
main [3] - 101:8, 181:8, 201:21
mains [1] - 201:21
maintain [5] - 76:15, 82:3, 115:5, 125:23, 128:25
maintained [3] - 174:7, 177:6, 177:12
maintaining [3] - 17:11, 18:4, 193:23
maintenance [2] - 101:15, 104:20
major [1] - 118:8
majority [3] - 149:8, 156:13, 162:23
man [3] - 65:19, 66:23, 212:5
manageable [1] - 207:24
manner [1] - 145:2
manufacturers [1] - 35:7
manufacturing [1] - 86:12
map [5] - 189:9, 197:16, 198:19, 198:24, 199:2
maps [2] - 136:24, 162:6
March [3] - 120:23, 162:7
mark [1] - 3:13
Martin [1] - 141:14
masonry [5] - 21:8, 54:16, 63:9, 69:21, 80:7
massing [1] - 76:4
match [8] - 57:7, 57:17, 57:18, 106:11, 114:6, 124:6, 125:7, 131:13
matches [1] - 44:14
matching [2] - 139:15, 149:24
material [16] - 44:5, 44:13, 77:12, 78:12, 109:8, 114:7, 114:10, 114:11, 114:17, 114:24, 115:25, 119:5, 139:16, 149:16, 182:6, 182:8
materiality [1] - 65:9
materialized [1] - 176:9
materials [14] - 4:3, 4:5, 44:22, 45:8, 58:9, 58:15, 76:7, 101:4, 103:1, 114:6, 114:19, 115:13, 170:25, 171:8
math [1] - 34:23
matrix [6] - 44:10, 45:1, 45:3, 204:9, 204:22, 205:5
matter [5] - 7:24, 74:2, 122:19, 137:13, 175:21
maximum [1] - 133:14
McEachin [3] - 206:22, 207:10, 209:2
mean [32] - 24:16, 30:25, 41:12, 47:12, 66:13, 70:3, 86:13, 86:24, 90:19, 96:5, 99:18, 101:11, 101:20, 119:6, 127:6, 128:1, 130:7, 142:9, 154:20, 155:24, 157:7, 157:15, 164:17, 166:11, 178:7, 178:14, 200:7, 200:10, 208:22, 208:23, 209:22, 211:18
meaningful [1] - 208:16
means [3] - 7:22, 150:22, 206:6
meant [1] - 129:13
measure [3] - 24:3, 24:17, 26:12
measurements [1] - 36:18
mechanics [2] - 49:21, 49:22
mechanism [2] - 52:15, 54:13
media [1] - 211:7
meet [5] - 50:11, 109:6, 109:19, 110:7, 110:24
meeting [28] - 2:4, 4:20, 7:5, 11:16, 11:20, 33:19, 41:18, 46:16, 51:7, 72:12, 72:20, 73:22, 105:7, 108:11, 108:16, 112:10, 145:17, 155:2, 160:20, 164:11, 178:22, 179:20, 196:21, 200:18, 202:11, 202:24, 203:18, 212:17
MEETING [1] - 1:3
meetings [3] - 24:24, 40:14, 196:21
meets [9] - 40:18, 63:8, 88:14, 108:21, 108:25, 109:16, 110:12, 110:17, 110:20
Meghan [1] - 172:17
MEMBER [29] - 8:7, 8:13, 8:18, 11:7, 11:10, 13:5, 13:8, 15:12, 16:7, 56:10, 56:15, 59:8, 59:13, 74:7, 78:25, 85:8, 87:12, 87:17, 116:22, 117:3, 117:6, 140:17, 140:21, 152:3, 152:8, 171:25, 172:4, 172:9, 172:13
Member [3] - 1:14, 1:14, 1:15
member [11] - 3:22, 8:12, 11:3, 16:3, 56:14, 59:10, 78:24, 87:16, 140:20, 152:7, 197:10
members [3] - 3:1, 117:2, 186:12
MEMBERS [63] - 7:8, 7:11, 7:13, 8:2, 9:19, 10:5, 10:8, 10:10, 13:2, 62:11, 62:14, 70:23, 74:4, 78:20, 82:21, 83:1, 84:20, 84:24, 87:9, 91:8, 111:25, 112:2, 112:17, 116:19, 123:10, 123:17, 135:11, 139:4, 140:14, 142:17, 142:24, 146:1, 146:6, 146:8, 146:15, 151:25, 161:5, 163:6, 165:4, 167:18, 167:22, 167:24, 168:8, 171:22, 176:13, 176:19, 181:20, 184:5, 184:7, 186:23, 192:8, 194:11, 194:13, 195:17, 195:20, 195:23, 196:8, 196:10, 198:11,

198:14, 198:22, 199:7, 199:9
Memorial [1] - 201:23
memos [1] - 199:24
mention [3] - 145:6, 159:18, 178:6
mentioned [5] - 7:17, 47:8, 64:5, 122:1, 204:22
mentioning [1] - 130:5
mercy [1] - 42:4
mere [1] - 14:2
message [1] - 33:3
messages [1] - 33:4
met [1] - 11:21
metal [14] - 31:14, 44:12, 70:2, 77:9, 77:12, 77:18, 77:19, 77:25, 78:2, 80:24, 81:1, 81:18, 81:21, 81:25
Michael [1] - 87:17
microphone [36] - 3:17, 19:5, 19:21, 19:23, 20:8, 21:16, 22:9, 23:15, 23:19, 27:12, 27:16, 27:22, 28:9, 30:13, 30:17, 33:4, 37:4, 37:8, 38:13, 45:2, 45:3, 63:11, 64:1, 66:15, 70:23, 93:3, 107:22, 117:20, 118:12, 145:12, 180:10, 183:3, 184:13, 192:5, 203:22
middle [4] - 4:1, 25:24, 92:10, 200:19
Midwest [1] - 103:10
might [19] - 14:13, 34:7, 50:22, 64:12, 64:22, 68:10, 92:8, 109:3, 111:21, 125:21, 126:13, 129:6, 154:17, 157:20, 158:1, 180:4, 196:21, 202:9
millennial [1] - 211:22
mind [4] - 30:4, 73:15, 98:23, 127:11
mine [2] - 14:22, 45:17
minimal [2] - 139:22, 140:5
minimum [1] - 4:5
Minor [1] - 6:5
minor [6] - 111:4, 113:25, 149:20, 168:2, 182:22, 184:9
minute [2] - 3:8, 111:21
minutes [4] - 3:23, 7:1, 7:4, 130:1
mis [1] - 67:15
mis-seeing [1] - 67:15
mishmash [1] - 104:3
misinformed [1] - 137:13
missed [3] - 126:19, 154:17, 166:24
missing [7] - 44:11, 45:9, 94:10, 148:15, 148:19, 149:21, 156:6
mix [2] - 137:17, 137:18
MMA-25-32776 [5] - 6:7, 168:4, 168:15, 176:24, 181:25
mock [1] - 91:18
mock-up [1] - 91:18
mocked [2] - 99:9, 99:10
model [2] - 23:2, 47:4
modern [2] - 133:1, 133:2
modification [6] - 111:5, 168:3, 174:23, 175:10, 182:22, 184:9
Modifications [1] - 6:5
modify [4] - 74:19, 74:20, 178:18, 178:19
moisture [2] - 95:18, 96:2
mold [12] - 19:11, 19:14, 20:5, 21:9, 38:13, 38:14, 39:13, 54:12, 54:18, 63:10, 69:22, 70:5
molding [2] - 19:10, 19:11
moment [3] - 10:17, 118:18, 168:13
money [7] - 43:7, 61:18, 61:23, 89:15, 204:13, 206:10, 208:13
montage [1] - 104:10
month [12] - 63:14, 65:4, 71:17, 71:21, 108:22, 142:13, 187:13, 187:16, 198:4, 199:24, 204:22, 205:6
month's [2] - 46:15, 137:8
months [4] - 65:19, 122:22, 142:10, 187:12
Montoya [1] - 3:3
MORGAN [99] - 1:14, 2:18, 24:21, 30:10, 30:18, 32:11, 32:15, 32:20, 32:22, 40:6, 41:11, 41:17, 41:22, 43:12, 43:23, 63:2, 64:25, 67:21, 67:24, 68:3, 91:12, 91:17, 92:1, 92:4, 92:12, 93:21, 93:25, 94:16, 94:20, 94:24, 95:25, 96:9, 96:14, 96:19, 96:24, 97:1, 97:11, 97:16, 97:24, 98:6, 98:9, 99:13, 108:18, 109:2, 110:1, 111:19, 123:20, 126:16, 127:5, 127:10, 127:21, 129:8, 129:12, 129:16, 132:2, 133:12, 135:8, 141:23, 142:2, 143:6, 143:17, 144:2, 154:14, 154:25, 155:4, 155:7, 158:13, 158:19, 158:24, 159:3, 159:9, 163:11, 164:23, 165:17, 166:3, 166:13, 166:21, 167:14, 175:1, 175:6, 176:25, 177:18, 179:1, 182:12, 183:2, 183:21, 189:12, 189:20, 193:11, 194:6, 202:8, 202:15, 202:20, 203:1, 203:3, 208:6, 209:13, 211:12, 211:16
Morgan [13] - 2:18, 13:23, 30:16, 67:6, 97:7, 104:2, 127:1, 134:23, 155:12, 166:10, 177:24, 189:17, 201:8
Morgan's [1] - 65:25
morning [3] - 98:4, 105:8, 110:23
most [12] - 18:1, 24:12, 45:19, 59:18, 67:10, 94:17, 148:17, 149:13, 162:24, 169:20, 183:25, 197:6
mostly [1] - 114:3
motion [50] - 7:2, 7:3, 9:22, 9:23, 62:13, 62:23, 62:24, 62:25, 71:3, 71:18, 71:19, 83:3, 83:4, 91:11, 91:12, 111:16, 123:19, 123:20, 143:1, 143:2, 146:3, 163:8, 163:9, 167:19, 176:21, 176:24, 178:13, 178:19, 178:20, 181:16, 181:23, 181:25, 182:10, 183:1, 183:19, 184:2, 192:13, 192:22, 192:24, 193:2, 193:6, 193:8, 195:25, 196:1, 198:16, 198:17, 199:5, 212:15
motto [1] - 31:6
mounting [2] - 40:9, 90:12
move [7] - 52:9, 55:15, 84:2, 110:15, 130:16, 145:18, 186:25
moved [1] - 122:19
moving [3] - 42:25, 65:7, 190:5
MR [282] - 2:11, 2:22, 2:24, 8:24, 9:2, 9:12, 11:14, 16:9, 16:13, 16:18, 16:20, 18:23, 19:5, 19:12, 19:16, 20:8, 20:17, 20:20, 21:3, 21:16, 22:9, 22:16, 22:22, 23:1, 23:10, 23:15, 23:21, 25:2, 25:9, 25:14, 25:22, 26:2, 26:10, 26:15, 27:12, 27:16, 27:22, 28:4, 28:10, 28:19, 30:1, 30:5, 30:9, 31:4, 32:14, 32:17, 32:21, 33:8, 33:13, 33:16, 34:5, 34:9, 34:14, 35:2, 35:17, 36:4, 36:8, 36:11, 36:15, 37:1, 37:4, 37:10, 37:20, 37:23, 37:25, 38:21, 38:24, 39:17, 40:23, 41:16, 41:21, 41:25, 44:7, 45:5, 45:21, 46:3, 47:14, 49:7, 49:15, 49:18, 50:3, 50:25, 51:12, 51:21, 52:17, 52:24, 53:21, 54:2, 54:5, 54:14, 54:20, 54:24, 55:21, 55:23, 56:1, 56:5, 62:18, 68:16, 69:25, 72:19, 72:23, 73:2, 73:4, 73:8, 73:14, 73:17, 74:12, 79:4, 79:9, 79:11, 80:25, 81:23, 82:16, 82:23, 83:13, 83:17, 85:12, 87:20, 87:24, 88:4, 88:6, 89:25, 91:4, 91:23, 92:3, 92:8, 92:14, 92:17, 93:4, 93:12, 93:16, 94:6, 94:19, 94:23, 95:1, 96:8, 96:13, 96:16, 96:22, 96:25, 97:3, 97:13, 97:21, 97:25, 98:7, 98:11, 100:8, 102:16, 103:25, 105:7, 106:17, 106:25, 107:4, 107:13, 108:15, 108:17, 108:25, 109:12, 109:21, 110:4, 110:9, 110:12, 110:16, 110:22, 111:6, 111:8, 111:12, 111:14, 112:21, 117:11, 117:16, 117:18, 118:4, 118:13, 120:23, 121:1, 121:16, 121:21, 122:4, 122:11, 122:17, 123:3, 123:6, 123:13, 124:24, 125:1, 126:25, 127:6, 128:7, 129:22, 129:25, 130:4, 130:15, 130:19, 131:10, 131:14, 131:23, 132:15, 134:10, 134:18, 135:19, 136:2, 136:8, 136:11, 136:17, 137:2, 137:9, 137:25, 138:2, 138:5, 138:7, 138:9, 138:13, 138:17, 138:20, 138:22, 139:8, 141:1, 141:6, 141:8, 142:1, 142:8, 142:13, 142:20, 146:19, 151:13, 152:14, 152:19, 152:21, 153:13, 153:15, 153:24,

154:2, 154:19, 155:3, 155:5, 155:15, 155:21, 156:7, 156:14, 157:3, 157:12, 158:10, 158:17, 158:20, 159:2, 159:25, 160:15, 160:25, 161:8, 165:9, 166:9, 166:14, 168:11, 175:12, 176:5, 177:23, 179:4, 179:11, 179:25, 180:16, 180:21, 181:3, 181:7, 181:12, 187:4, 187:17, 187:19, 189:16, 194:19, 196:15, 199:14, 200:22, 200:25, 203:4, 203:10, 203:14, 205:3, 205:21, 207:6, 208:11, 210:6
MS [68] - 2:13, 9:6, 13:16, 13:18, 15:21, 19:19, 19:22, 19:25, 28:8, 30:16, 34:4, 34:6, 42:18, 43:22, 45:15, 56:22, 56:24, 59:16, 62:5, 66:21, 67:23, 68:1, 68:5, 70:15, 70:19, 70:25, 71:20, 71:22, 71:23, 72:5, 72:8, 72:15, 72:22, 73:1, 73:3, 73:13, 73:16, 92:19, 117:20, 118:1, 138:23, 143:14, 143:20, 161:13, 161:20, 161:22, 167:7, 167:12, 172:11, 175:5, 176:16, 178:10, 178:23, 179:6, 179:13, 179:17, 181:17, 181:22, 182:9, 182:13, 182:18, 184:17, 184:24, 189:23, 191:17, 192:10, 192:25, 200:10
mud [1] - 120:11
multiple [1] - 149:3
Municipal [3] - 162:3, 204:4, 204:10
muntin [1] - 58:11
muntins [2] - 58:12, 58:14
museum [4] - 196:19, 197:20, 197:22, 198:2
Museum [1] - 196:20
must [1] - 3:12

N

nailing [2] - 42:12, 42:14
name [31] - 3:18, 8:17, 13:7, 13:9, 16:5, 16:20, 24:8, 56:12, 59:11, 78:23, 87:14, 87:17, 116:25, 140:19, 152:5, 172:2, 172:17, 189:4, 189:7, 190:11, 190:16, 190:20, 191:13, 191:16, 191:19, 191:24, 195:9, 195:12, 196:17, 197:14, 198:7
named [5] - 188:16, 193:16, 193:17, 193:25, 197:11
names [3] - 189:3, 190:14, 195:8
naming [1] - 196:18
namings [1] - 6:14
narrow [1] - 29:2
narrower [1] - 29:13
narrowing [1] - 113:15
National [8] - 100:9, 100:14, 100:22, 102:9, 102:12, 102:18, 103:18, 187:10
national [1] - 186:4
near [1] - 133:2
nearly [1] - 46:19
necessarily [1] - 134:21
need [43] - 7:24, 8:13, 17:5, 30:2, 34:25, 38:13, 40:3, 41:10, 50:8, 55:15, 57:3, 61:20, 62:22, 70:5, 81:21, 95:7, 104:21, 108:22, 118:11, 125:11, 125:12, 125:25, 126:2, 126:12, 128:21, 131:12, 132:12, 141:18, 143:24, 156:10, 156:19, 158:15, 159:21, 163:18, 165:7, 165:23, 166:12, 172:12, 178:11, 181:14, 182:14, 207:17, 210:7
needed [4] - 4:9, 167:2, 176:15, 204:11
needs [15] - 20:22, 23:24, 49:25, 50:11, 65:12, 81:9, 124:2, 124:5, 156:25, 162:19, 163:17, 163:22, 172:21, 204:7, 211:13
Neglect [1] - 204:3
neighbor [10] - 14:21, 14:24, 19:6, 20:11, 55:10, 55:11, 153:1, 155:23, 157:11, 158:3
neighbor's [3] - 48:11, 157:4, 161:1
neighborhood [15] - 14:18, 14:19, 28:17, 60:7, 60:8, 60:14, 60:21, 60:22, 60:25, 61:4, 61:11, 61:24, 62:6, 124:6, 133:23
neighborhoods [2] - 185:22
neighbors [9] - 17:13, 18:15, 33:20, 34:8, 42:2, 80:10, 89:7, 120:12, 155:2
neighbors' [2] - 17:17, 124:9
never [5] - 43:2, 73:14, 172:25, 174:17, 195:4
New [2] - 6:11, 187:1
new [41] - 39:9, 40:25, 42:12, 42:14, 44:17, 44:18, 53:3, 54:21, 57:16, 75:13, 75:19, 81:21, 101:3, 108:13, 114:10, 114:24, 115:17, 132:12, 147:15, 147:17, 147:18, 147:23, 150:1, 150:6, 157:25, 168:13, 169:6, 169:14, 170:5, 170:18, 171:9, 175:19, 178:1, 180:24, 180:25, 181:16, 182:25, 199:18, 201:3, 201:21, 207:22
next [43] - 5:6, 5:10, 5:19, 6:2, 6:5, 6:11, 6:17, 7:16, 7:20, 10:19, 14:21, 14:25, 47:21, 71:17, 71:21, 73:22, 73:24, 85:2, 108:11, 108:15, 108:22, 112:11, 122:22, 138:24, 146:12, 154:21, 155:23, 168:2, 184:20, 186:25, 187:13, 187:15, 187:19, 194:17, 199:13, 199:15, 199:18, 199:24, 201:1, 202:24, 203:21, 205:6, 207:21
next-door [1] - 14:21
nice [3] - 29:20, 208:21, 209:25
night [2] - 18:14, 28:15
nighttime [1] - 128:17
ninety [1] - 41:2
ninety-five [1] - 41:2
nobody [1] - 89:18
noise [2] - 14:14, 126:5
nominate [3] - 209:8, 210:20
nominated [1] - 209:17
nominating [1] - 210:10
nomination [2] - 186:3, 187:11
nominations [2] - 207:20, 210:9
non [1] - 84:13
non-viewable [1] - 84:13
noncompliant [1] - 149:12
noncontributing [4] - 44:16, 45:11, 67:11, 75:11
none [9] - 7:9, 62:12, 91:9, 112:4, 123:18, 163:7, 176:20, 188:25, 196:11
nonhistoric [6] - 46:2, 101:3, 147:14, 148:17, 148:22, 149:11
nonoriginal [4] - 44:12, 45:10, 46:2, 46:4
nontinted [1] - 100:19
normally [2] - 43:15, 48:9
north [2] - 17:7, 174:4
North [4] - 1:8, 5:9, 10:22, 13:9
Notary [1] - 1:10
note [5] - 10:23, 68:16, 75:21, 139:17, 180:1
noted [4] - 76:18, 87:6, 140:11, 148:12
notes [4] - 76:3, 121:11, 145:18, 213:11
nothing [14] - 13:14, 16:16, 56:5, 56:20, 79:7, 88:2, 117:15, 117:24, 141:4, 152:17, 154:7, 158:22, 161:18, 201:3
notice [2] - 31:12, 136:19
noticeably [1] - 58:10
noticed [1] - 141:12
notification [5] - 6:19, 62:4, 89:24, 120:21, 201:12
notify [1] - 201:14
November [1] - 205:7
nowadays [1] - 68:19
nowhere [2] - 34:21, 82:1
NPS [1] - 106:23
number [8] - 4:25, 5:22, 5:23, 36:11, 44:8, 73:25, 170:17, 187:1
Number [10] - 5:2, 5:3, 5:4, 5:17, 5:25, 77:22, 78:8, 83:21, 100:14, 100:23
numbers [4] - 41:19, 99:25, 139:21, 179:10

O

o'clock [1] - 160:19
Oak [1] - 201:18
object [1] - 150:20
objection [7] - 150:11, 175:21, 175:25, 176:7, 189:6, 195:11, 198:6
objections [2] - 116:10, 171:7
objects [1] - 171:9
obscuring [1] - 87:1
observe [1] - 10:16
obstruct [1] - 104:16
obtain [2] - 66:9,

175:17
obtained [2] - 47:12, 141:11
obviously [8] - 18:6, 24:4, 29:10, 41:3, 49:8, 69:11, 124:13, 135:4
occur [2] - 201:22, 208:11
occurring [1] - 201:17
occurs [1] - 19:1
October [8] - 73:23, 108:17, 137:23, 138:19, 179:24, 202:23, 205:5, 213:15
oddity [1] - 96:3
OF [4] - 1:1, 213:1, 213:3, 213:4
Off-microphone [1] - 70:23
offer [1] - 177:9
offers [1] - 95:11
Office [2] - 1:19, 2:13
officially [1] - 206:2
offline [1] - 208:4
OGC [1] - 190:9
Old [5] - 202:7, 202:9, 203:24, 205:11, 212:11
old [14] - 23:23, 26:22, 28:25, 29:11, 33:2, 34:1, 39:8, 49:21, 90:17, 94:8, 94:17, 119:13, 200:5
older [1] - 129:3
oldest [1] - 197:5
once [7] - 8:24, 26:21, 51:19, 141:11, 162:15, 206:3, 206:11
one [82] - 2:6, 3:18, 4:18, 5:8, 6:6, 8:15, 8:20, 10:13, 19:22, 20:9, 20:11, 27:8, 32:8, 33:5, 33:22, 37:10, 38:3, 44:17, 50:5, 50:15, 50:16, 54:7, 60:21, 67:5, 67:13, 70:8, 72:24, 73:4, 73:22, 74:18, 79:14, 80:2, 80:13, 81:24, 88:12, 89:12, 93:24, 95:8, 95:12, 95:22, 95:24, 98:7, 99:19, 106:10, 112:13, 113:6, 121:1, 124:18, 125:23, 126:21, 127:3, 127:8, 127:14, 136:1, 140:4, 143:19, 144:4, 144:25, 158:21, 160:22, 161:11, 174:19, 185:10, 187:7, 187:20, 187:25, 191:1, 194:20, 196:14, 197:5, 197:9, 199:14, 199:15, 200:12, 200:18, 201:6, 201:14, 205:11, 205:22, 206:17, 208:6, 208:18
one-eighth [1] - 88:12
one-story [3] - 74:18, 113:6, 158:21
Oneida [3] - 6:13, 185:1, 185:9
ones [4] - 8:15, 8:20, 69:16, 79:22
online [1] - 11:21
open [22] - 6:9, 8:4, 11:4, 45:2, 70:7, 74:10, 85:10, 112:18, 129:13, 130:15, 134:7, 135:3, 136:9, 136:11, 139:5, 146:16, 150:5, 168:9, 184:11, 205:20, 205:22, 206:8
opening [10] - 38:12, 40:17, 47:22, 65:13, 69:22, 71:7, 147:19, 175:19, 184:15, 206:11
openings [6] - 76:13, 76:22, 85:16, 115:10, 132:21, 139:15
opinion [3] - 84:18, 144:21, 159:24
opinions [2] - 80:25, 125:22
opportunity [2] - 9:8, 71:17
opposed [12] - 7:12, 10:9, 62:2, 84:25, 112:1, 112:4, 146:7, 167:23, 184:6, 194:12, 196:9, 199:8
opposite [1] - 80:2
opposition [1] - 3:8
option [8] - 17:22, 42:22, 43:3, 45:8, 66:23, 68:18, 69:4, 71:10
options [6] - 44:9, 68:10, 68:19, 69:14, 71:9, 126:23
order [12] - 2:5, 4:11, 4:16, 24:14, 57:4, 88:18, 95:13, 115:4, 135:22, 148:21, 182:23, 186:25
ordered [1] - 105:10
Ordinance [7] - 76:2, 114:5, 116:14, 140:10, 170:8, 171:13, 187:22
organism [1] - 12:2
original [14] - 39:2, 39:5, 39:14, 59:20, 60:18, 67:11, 89:13, 89:14, 161:25, 162:23, 164:6, 174:23, 186:6, 197:2
originally [9] - 57:19, 162:12, 162:18, 185:14, 186:8, 188:16, 193:16, 193:17, 193:25
originals [1] - 45:22
otherwise [2] - 42:22, 84:6
ourselves [1] - 207:25
outlined [3] - 102:1, 165:11, 188:8
outside [9] - 48:4, 53:4, 53:5, 55:2, 94:21, 96:12, 96:17, 113:19, 119:11
over-committed [1] - 202:17
overall [5] - 76:4, 86:3, 103:3, 126:14, 163:23
overlap [2] - 38:19, 52:21
overlapping [2] - 49:3, 93:14
overlaps [1] - 37:19
oversize [1] - 134:22
oversized [2] - 127:8, 132:23
own [6] - 35:1, 69:20, 125:22, 158:6, 177:16, 210:10
owned [2] - 196:18, 197:19
owner [10] - 76:19, 87:18, 153:23, 154:6, 177:7, 185:1, 187:8, 190:3, 190:15, 191:3
owner's [2] - 173:2, 173:23
owners [1] - 141:9

P

p.m [7] - 1:7, 2:1, 2:8, 200:11, 200:13, 203:6, 212:20
package [3] - 12:3, 101:7, 109:22
packet [9] - 12:24, 109:7, 109:18, 123:1, 156:4, 156:24, 159:5, 159:7, 182:8
packets [1] - 108:2
pad [1] - 171:1
Page [3] - 79:19, 155:13, 159:5
page [1] - 211:2
paint [3] - 50:19, 58:18, 98:18
painted [2] - 94:21, 97:12
paired [1] - 150:8
pane [1] - 100:16
panel [2] - 48:4, 98:17
parallel [1] - 170:3
parcel [2] - 188:12, 194:24
Park [15] - 100:9, 100:22, 102:9, 102:12, 102:18, 103:19, 188:14, 188:16, 188:17, 188:18, 188:20, 188:22, 190:18, 190:19, 201:23
park [9] - 170:23, 190:22, 191:2, 191:5, 193:17, 193:19, 193:25, 194:2
parking [3] - 115:18, 169:15, 171:1
Parks [1] - 201:24
part [29] - 4:6, 5:19, 6:2, 20:25, 21:23, 21:25, 22:18, 22:19, 22:23, 23:1, 24:12, 30:14, 30:22, 30:23, 30:24, 94:11, 102:13, 103:10, 131:17, 136:25, 137:2, 145:8, 154:12, 158:11, 175:9, 189:2, 195:8, 198:24, 199:2
partake [1] - 18:10
parte [8] - 7:25, 12:16, 74:2, 112:15, 139:2, 146:14, 168:5, 168:6
partially [1] - 146:24
participation [1] - 211:24
particular [8] - 43:19, 58:12, 59:18, 79:20, 172:18, 185:16, 186:4, 197:10
particularly [2] - 80:5, 149:10
parties [1] - 8:11
parts [4] - 34:20, 36:10, 105:2
pass [3] - 19:17, 86:10, 168:13
passing [1] - 191:21
passion [1] - 57:3
past [6] - 40:14, 48:21, 102:12, 205:4, 208:1, 210:7
patches [1] - 113:25
patents [1] - 88:25
pay [2] - 204:15, 208:13
Pearl [3] - 5:9, 10:21, 13:9
pebble [1] - 169:21
pedestrian [4] - 112:24, 113:11, 116:11, 134:13
peeling [1] - 58:18
Pella [3] - 24:7, 25:4, 25:12
Pella's [2] - 37:13, 37:15
Peluso [1] - 190:12
pending [4] - 6:18, 143:22, 182:16, 201:5
people [26] - 29:14, 47:18, 55:8, 61:9, 61:17, 64:17, 81:18, 89:12, 89:16, 89:21, 124:10, 128:13, 157:20, 183:10, 186:13, 204:25, 208:25, 209:3, 209:8, 209:9, 209:19, 210:19, 211:5, 211:23, 212:9
people's [3] - 28:16, 47:15, 210:15
per [6] - 88:11, 137:17, 144:24, 146:4, 173:13
percent [18] - 35:14, 41:2, 66:21, 86:10, 86:15, 86:23, 86:24, 88:9, 88:11, 88:13, 88:17, 89:5, 89:6,

101:5, 105:12, 105:25, 106:6, 109:1
percentage [1] - 108:24
percentages [1] - 108:3
perfect [1] - 9:2
performance [1] - 100:20
perimeter [1] - 18:22
period [1] - 113:19
permanent [1] - 81:10
permanent-type [1] - 81:10
permissible [1] - 101:24
permit [8] - 101:2, 116:9, 120:19, 141:11, 141:16, 142:9, 143:12, 175:17
permits [1] - 165:19
person [5] - 3:19, 28:7, 28:10, 104:6, 161:11
personally [1] - 40:20
persuasive [1] - 15:3
philanthropy [1] - 197:9
phone [4] - 19:7, 21:17, 34:10, 171:2
phones [1] - 3:6
phonetic) [1] - 16:7
photo [2] - 30:19, 32:15
photos [4] - 47:5, 91:18, 128:17, 163:20
Photoshop [1] - 91:19
picked [3] - 65:11, 193:20, 210:1
picture [19] - 21:4, 21:5, 21:18, 23:6, 27:19, 30:12, 31:11, 31:21, 33:8, 38:2, 39:1, 39:10, 54:6, 89:8, 153:18, 154:21, 160:25, 173:21, 206:12
pictures [20] - 14:18, 15:18, 15:22, 15:23, 15:24, 18:14, 19:1, 24:5, 26:11, 27:7, 28:3, 42:7, 48:17, 63:13, 73:18, 121:3, 121:4, 124:9, 153:2, 154:24
piece [15] - 20:5, 25:18, 31:14, 31:25, 35:6, 35:19, 38:22, 48:5, 49:11, 53:14, 64:1, 95:16, 106:10, 145:3
pieces [6] - 30:20, 31:13, 34:21, 36:10, 120:10, 131:8
pier [1] - 147:4
pine [1] - 94:13
pipe [1] - 201:16
Place [3] - 196:16, 198:19, 199:12
place [7] - 75:14, 97:21, 128:9, 154:4, 160:5, 187:6, 207:22
placed [2] - 79:14, 80:19
placement [2] - 44:15, 140:3
plan [17] - 6:17, 6:23, 83:19, 83:23, 84:5, 116:24, 138:4, 168:13, 169:10, 172:23, 179:7, 179:14, 179:16, 180:2, 180:13, 182:1, 206:11
Plan [1] - 195:3
plane [1] - 181:13
planned [3] - 188:10, 194:23, 196:18
Planner [1] - 1:17
planning [6] - 143:18, 176:3, 199:15, 199:18, 203:5, 206:8
Planning [7] - 1:17, 1:18, 1:18, 2:11, 2:22, 2:24, 118:21
plans [3] - 134:25, 142:9, 202:2
plastic [1] - 31:13
plat [1] - 197:2
plate [3] - 119:14, 209:14, 210:4
platted [2] - 186:8, 195:4
plumbing [2] - 173:22, 174:8
Ply [2] - 155:13, 155:19
podium [18] - 8:12, 11:3, 16:3, 56:14, 59:10, 66:16, 78:24, 87:16, 93:1, 105:6, 117:2, 129:24, 136:3, 140:20, 152:7, 161:12, 184:23, 189:22
point [8] - 22:11, 26:17, 31:5, 39:24, 81:24, 82:1, 205:25, 208:1
polarizing [1] - 191:22
politics [1] - 197:9
pollute [1] - 210:24
poly [1] - 155:13
pomp [1] - 212:9
pool [1] - 206:7
popular [1] - 211:4
porch [19] - 140:3, 147:23, 148:2, 148:14, 150:1, 150:2, 150:5, 153:5, 158:10, 158:18, 158:22, 159:19, 159:23, 162:10, 162:11, 162:14, 162:19
porches [4] - 162:1, 162:8, 164:15, 164:16
porous [1] - 119:10
portfolio [1] - 48:10
portion [9] - 38:19, 84:13, 92:20, 163:18, 188:24, 195:7, 197:15, 197:18, 208:22
portions [2] - 20:4, 94:10
position [2] - 180:9, 180:14
possibility [1] - 106:2
possible [1] - 114:18
possibly [2] - 135:3, 177:7
posted [1] - 148:22
potential [1] - 57:2
potentially [1] - 66:13
poured [8] - 43:7, 113:2, 113:14, 115:23, 169:2, 169:19, 171:6, 178:4
PowerPoint [2] - 172:19, 173:7
practical [1] - 77:4
Prater [2] - 13:9, 66:16
PRATER [23] - 13:16, 13:18, 15:21, 19:19, 19:25, 28:8, 34:4, 34:6, 42:18, 43:22, 45:15, 66:21, 67:23, 68:1, 68:5, 71:20, 71:23, 72:5, 72:22, 73:1, 73:3, 73:13, 73:16
precisely [1] - 47:3
preclude [1] - 143:23
predominantly [1] - 42:17
prefer [4] - 29:9, 101:17, 136:4, 177:9
premium [1] - 32:8
prepared [2] - 14:4, 81:23
preparing [1] - 108:2
presence [2] - 64:6, 114:12
PRESENT [2] - 1:12, 1:16
present [2] - 109:10, 115:6
presentation [1] - 4:6
presentations [1] - 3:20
presented [7] - 57:7, 66:8, 68:11, 109:7, 134:7, 180:3, 180:14
Preservation [10] - 2:5, 84:7, 100:14, 100:23, 111:2, 148:7, 190:13, 204:10, 204:15, 206:20
PRESERVATION [1] - 1:2
preservation [1] - 102:17
preserve [7] - 89:22, 94:7, 94:21, 95:1, 95:19, 101:13, 161:24
preserved [1] - 170:13
pretty [6] - 99:7, 99:10, 106:3, 126:15, 126:17, 179:2
prevent [2] - 87:1, 165:19
preventing [1] - 86:7
previous [3] - 115:7, 137:12, 178:20
Previously [1] - 6:6
previously [16] - 5:7, 7:21, 10:20, 11:15, 71:20, 115:22, 116:4, 116:5, 134:19, 134:20, 168:3, 168:17, 169:8, 180:23, 191:13, 204:12
price [4] - 17:25, 88:18, 105:13, 109:14
price-wise [1] - 109:14
pricing [2] - 106:3, 106:13
primary [13] - 47:13, 64:5, 74:16, 74:25, 75:12, 76:7, 76:10, 76:24, 77:10, 77:13, 77:17, 114:2, 114:13
principle [1] - 191:24
pristine [1] - 41:5
problem [3] - 68:20, 124:1, 131:18
problems [1] - 119:9
procedure [1] - 193:1
proceeding [1] - 191:23
proceedings [4] - 3:15, 9:16, 212:19, 213:9
Proceedings [1] - 1:6
process [10] - 18:13, 120:18, 155:8, 157:21, 175:22, 175:25, 205:18, 206:5, 209:16, 210:2
product [32] - 11:23, 12:6, 12:14, 18:2, 18:5, 29:14, 35:5, 44:20, 45:14, 46:11, 50:14, 66:5, 66:8, 71:1, 71:2, 71:5, 71:11, 71:14, 73:11, 73:12, 94:14, 106:2, 108:5, 108:13, 110:7, 110:16, 110:20, 149:15, 160:18, 160:23, 167:13
productive [1] - 208:15
products [1] - 89:4
Professional [2] - 213:7, 213:18
profile [1] - 131:13
profiles [1] - 57:18
program [4] - 61:15, 201:16, 205:15, 205:20
progress [3] - 11:18, 12:8, 166:19
project [9] - 44:6, 105:10, 141:9, 142:7, 152:21, 197:25, 201:22, 209:23, 211:8
projects [4] - 6:19, 201:13, 209:25, 211:17
prominent [2] - 145:3, 197:6
proof [1] - 145:21
proper [2] - 167:1, 193:1
properties [5] - 57:23, 64:11, 66:3, 183:11, 204:5

Properties [1] - 5:11
property [52] - 74:14, 74:22, 74:24, 75:22, 75:25, 78:4, 80:8, 80:16, 84:13, 84:16, 85:13, 86:3, 87:18, 112:22, 113:3, 113:6, 114:4, 116:1, 139:9, 139:21, 141:12, 141:17, 146:21, 148:11, 158:5, 158:6, 168:16, 168:19, 168:22, 168:24, 169:10, 169:23, 169:25, 170:4, 170:6, 170:12, 170:21, 170:24, 172:19, 172:24, 173:2, 173:23, 174:3, 174:17, 174:20, 183:8, 183:12, 187:8, 190:3, 190:5, 190:15, 191:3
proposal [2] - 132:22, 135:17
propose [3] - 113:13, 169:7, 202:23
proposed [46] - 11:23, 14:23, 75:11, 76:5, 76:8, 79:25, 85:18, 85:23, 86:8, 86:9, 86:21, 91:21, 114:22, 114:25, 116:10, 124:5, 128:11, 139:19, 140:8, 146:25, 147:6, 148:7, 148:11, 150:1, 150:6, 150:11, 150:16, 159:15, 160:13, 170:15, 171:4, 171:9, 171:11, 171:12, 171:15, 172:23, 180:17, 188:1, 188:7, 189:7, 191:13, 191:20, 193:3, 195:11, 198:7, 199:23
proposes [7] - 113:8, 113:20, 147:12, 147:16, 147:22, 149:3, 169:4
proposing [8] - 14:13, 14:20, 32:16, 77:7, 77:16, 80:13, 95:22, 134:6
protect [3] - 85:16, 96:7, 98:2
protecting [4] - 87:2, 96:2, 96:16, 96:21
protection [1] - 86:5
provide [7] - 4:4, 12:7, 14:6, 14:18, 15:24, 66:12, 204:4
provided [13] - 4:6, 11:25, 12:13, 58:13, 76:16, 82:9, 86:11, 118:21, 119:2, 133:22, 156:25, 158:25, 168:14
providing [1] - 4:3
proximity [1] - 188:21
Pryor [5] - 56:15, 161:12, 161:13, 184:23, 184:25
PRYOR [7] - 56:22, 56:24, 161:13, 161:20, 161:22, 184:17, 184:24
public [37] - 3:7, 3:22, 4:7, 6:9, 8:4, 9:21, 11:5, 62:13, 74:10, 75:23, 80:10, 80:17, 83:3, 85:10, 91:10, 92:19, 112:19, 123:19, 139:6, 143:1, 145:1, 146:16, 163:8, 168:10, 176:21, 184:11, 184:12, 184:15, 186:22, 186:25, 209:18, 210:9, 210:21, 211:4, 211:8, 211:13
Public [2] - 1:10, 175:16
pull [6] - 27:2, 39:8, 54:6, 155:17, 160:16, 166:3
pulled [1] - 162:5
pulley [2] - 57:21, 59:20
purchased [1] - 14:5
pursuing [1] - 187:10
pushing [2] - 180:22, 200:14
put [30] - 32:25, 33:15, 42:14, 47:21, 52:6, 53:13, 69:21, 71:7, 89:2, 90:20, 95:8, 95:16, 96:9, 96:23, 98:1, 98:16, 100:2, 101:13, 102:19, 104:5, 123:1, 124:22, 130:8, 130:9, 131:19, 138:12, 204:24, 205:17, 206:21
putting [4] - 54:16, 61:21, 93:7, 160:6
PVC [1] - 201:21

Q

quadruple [1] - 17:25
qualify [1] - 171:16
qualities [2] - 32:8, 114:8
quality [2] - 50:23, 51:14
quantify [1] - 151:7
quarter [8] - 24:9, 24:11, 24:20, 26:16, 39:8, 53:19, 62:2, 134:15
quarter-inch [1] - 24:11
quarter-light [1] - 134:15
quarters [2] - 20:23, 53:7
quasi [3] - 7:24, 72:14, 74:1
quasi-judicial [3] - 7:24, 72:14, 74:1
questionable [1] - 148:2
questions [42] - 13:1, 14:10, 15:4, 15:7, 15:15, 18:18, 51:22, 55:20, 78:18, 79:13, 80:21, 82:19, 87:7, 91:2, 116:17, 121:20, 121:23, 123:8, 123:12, 124:3, 140:13, 141:21, 142:15, 151:5, 151:23, 153:8, 158:8, 161:3, 161:7, 171:21, 174:24, 176:11, 185:6, 186:17, 189:10, 191:10, 192:4, 192:6, 195:15, 198:9, 204:21, 206:15
quick [7] - 31:9, 44:1, 70:16, 100:5, 108:19, 129:20, 159:12
quiet [1] - 200:7
quite [1] - 42:1
quorum [2] - 3:2, 4:17
quote [2] - 132:24, 190:24
quoted [1] - 154:22

R

radically [1] - 58:3
rail [25] - 12:21, 21:24, 22:11, 24:10, 25:14, 27:2, 28:12, 28:13, 29:2, 35:13, 35:14, 36:5, 36:12, 37:13, 37:14, 40:2, 63:19, 63:20, 156:19, 156:20, 160:12
railing [5] - 147:21, 148:25, 150:20, 150:23, 151:17
rails [3] - 15:16, 25:19, 150:25
rain [6] - 95:5, 96:18, 96:22, 97:3, 97:4, 119:11
raise [7] - 16:11, 79:2, 85:6, 87:22, 117:9, 140:24, 152:12
raised [1] - 88:18
raises [2] - 56:17, 161:15
Raises [2] - 13:11, 117:21
ran [1] - 136:20
RAP [1] - 210:22
rather [4] - 61:24, 127:3, 149:24, 160:12
rating [1] - 47:17
reach [1] - 72:15
reached [1] - 190:6
read [7] - 67:8, 77:22, 83:18, 84:3, 101:24, 103:24, 113:16
readily [1] - 75:25
reading [1] - 123:5
reads [1] - 4:16
ready [2] - 83:7, 119:7
real [8] - 70:16, 71:12, 91:19, 91:20, 118:15, 118:19, 131:15, 144:19
really [40] - 21:12, 21:13, 26:23, 29:18, 30:21, 32:11, 38:20, 40:25, 43:18, 53:15, 56:3, 61:7, 65:4, 65:21, 71:1, 79:12, 80:8, 80:14, 92:2, 93:25, 94:20, 97:23, 98:2, 108:22, 118:17, 129:13, 130:7, 159:9, 173:20, 190:25, 191:1, 191:8, 193:22, 201:5, 207:3, 208:8, 209:25, 210:7, 211:12
rear [23] - 76:13, 77:2, 147:18, 147:21, 148:15, 148:24, 148:25, 149:2, 149:10, 149:22, 150:11, 150:19, 150:21, 150:22, 151:16, 151:17, 160:10, 170:23, 170:25, 174:11, 183:11
reason [6] - 45:24, 105:23, 133:25, 145:15, 191:14, 194:22
reasonable [2] - 149:14, 150:15
reasoning [1] - 85:22
reasons [1] - 60:21
rebuild [1] - 69:5
rebuilding [1] - 104:19
rebuilt [2] - 145:2, 212:4
receipt [1] - 137:16
receive [2] - 33:20, 160:18
received [5] - 33:23, 38:7, 156:23, 157:11, 157:19
receiving [1] - 136:15
recently [1] - 186:2
recess [1] - 112:8
recognition [1] - 212:13
recognize [2] - 17:16, 188:13
recognized [1] - 211:9
recollection [1] - 137:4
recommend [8] - 114:6, 115:3, 130:22, 133:6, 133:10, 160:5, 178:1, 193:2
recommendation [22] - 10:24, 10:25, 12:12, 78:16, 82:9, 87:5, 88:7, 100:6, 103:19, 103:23, 116:16, 140:11, 146:4, 151:3, 159:13, 164:25, 170:17, 171:19, 177:22, 195:14, 198:8, 199:11
recommendations [2] - 102:20, 103:3

recommended [11] - 58:2, 58:16, 76:12, 100:18, 101:22, 108:12, 128:6, 149:16, 196:12, 198:3, 204:16
recommending [9] - 45:24, 86:20, 88:8, 97:8, 108:5, 160:7, 177:5, 189:14, 194:15
recommends [3] - 149:23, 170:22, 170:25
record [13] - 2:7, 3:18, 4:7, 8:17, 13:7, 16:6, 74:24, 115:7, 126:6, 170:20, 192:18, 200:21, 213:10
recorded [1] - 3:15
Recreation [1] - 201:25
rectangular [2] - 132:20, 133:8
red [4] - 20:10, 20:11, 21:20, 39:1
redid [1] - 66:24
redoing [1] - 41:5
redone [1] - 205:18
reduce [4] - 86:24, 89:3, 90:17, 90:18
reduced [1] - 173:12
reduces [2] - 89:10, 90:22
reducing [1] - 171:4
reference [9] - 73:9, 101:2, 101:8, 102:18, 160:9, 160:23, 170:9, 179:7, 179:17
referencing [1] - 106:22
referred [1] - 201:15
referring [2] - 100:15, 101:22
refers [1] - 170:11
refined [1] - 204:7
reflect [2] - 2:7, 160:2
reflections [1] - 155:22
reframe [1] - 69:5
reframed [1] - 69:7
refresh [1] - 61:10
regard [1] - 166:19
regarding [7] - 79:15, 130:20, 172:18, 189:11, 199:20, 201:15, 207:17
regardless [1] - 115:5
regards [1] - 102:2
region [1] - 103:6
Register [1] - 187:10
REHAB [2] - 205:13, 205:14
Rehabilitation [2] - 58:1, 170:11
relate [1] - 48:7
relocation [2] - 188:10, 194:23
remains [2] - 12:12, 206:6
remember [5] - 33:3, 46:20, 162:3, 176:3, 187:24
remembering [1] - 192:3
remind [3] - 57:24, 132:9, 135:15
remodeled [1] - 42:9
removal [3] - 139:14, 139:19, 140:4
remove [6] - 20:23, 39:7, 69:6, 139:10, 153:11, 154:7
removed [14] - 17:10, 75:12, 90:6, 90:13, 142:12, 144:21, 147:9, 148:23, 151:10, 151:11, 151:19, 152:22, 157:25, 163:19
removing [5] - 58:2, 144:23, 147:7, 147:13, 161:23
rename [4] - 190:7, 191:14, 194:20, 198:2
renamed [4] - 188:18, 188:20, 190:19, 193:18
renaming [20] - 188:2, 188:4, 188:7, 188:9, 189:11, 191:4, 191:6, 191:25, 193:3, 193:9, 193:23, 194:1, 194:15, 196:2, 196:12, 196:14, 196:15, 198:4, 198:18, 199:11
renamings [3] - 187:20, 192:22, 194:18
renovation [1] - 143:18
renovations [1] - 197:23
rent [2] - 208:12, 208:13
repair [17] - 43:6, 57:11, 57:12, 57:15, 57:16, 58:21, 113:24, 114:21, 128:23, 131:7, 131:9, 149:14, 149:17, 149:23, 150:15, 160:7
repairable [2] - 147:24, 148:4
repaired [2] - 114:18, 164:14
repeat [2] - 72:9, 83:11
repeated [1] - 101:25
replac [1] - 58:16
replace [10] - 44:12, 64:17, 113:9, 113:11, 113:21, 147:17, 152:23, 152:25, 201:20, 202:3
replaceable [1] - 81:7
replaced [14] - 46:9, 67:14, 75:16, 114:6, 114:7, 133:17, 148:25, 149:11, 151:17, 153:21, 154:4, 156:1, 163:23
replacement [44] - 21:4, 28:21, 28:22, 31:22, 32:18, 44:10, 45:1, 45:7, 57:2, 57:10, 59:3, 70:20, 78:1, 100:17, 112:24, 112:25, 113:24, 114:14, 114:19, 116:11, 128:1, 128:5, 128:21, 129:17, 131:5, 147:7, 147:13, 147:24, 148:4, 149:7, 149:15, 149:16, 149:23, 150:10, 150:13, 150:16, 157:2, 160:8, 164:1, 164:9, 166:15, 167:2, 167:3, 201:16
replacements [2] - 42:8, 55:12
replacing [7] - 58:17, 59:21, 61:2, 71:6, 131:11, 147:15, 147:16
replicate [2] - 25:1, 66:6
reply [1] - 70:24
repointed [1] - 144:12
report [27] - 11:12, 11:15, 11:17, 12:2, 67:9, 74:11, 77:21, 83:12, 85:11, 87:3, 87:6, 112:20, 118:16, 131:16, 139:6, 140:12, 146:18, 162:22, 165:11, 168:10, 187:9, 188:3, 201:2, 201:4, 202:5, 204:17, 213:9
Reporter [6] - 19:25, 137:1, 180:11, 203:25, 213:8, 213:18
REPORTER [30] - 13:12, 13:17, 16:11, 16:14, 16:19, 20:1, 56:18, 56:23, 79:2, 79:5, 79:10, 87:22, 87:25, 88:5, 117:8, 117:12, 117:17, 117:19, 117:22, 118:2, 118:11, 140:24, 141:2, 141:7, 152:11, 152:15, 152:20, 161:16, 161:21, 213:1
reporter [2] - 3:16, 19:24
reports [1] - 6:18
represent [2] - 172:17, 185:5
request [8] - 3:24, 59:3, 167:1, 167:9, 178:4, 185:7, 194:20, 197:14
requested [9] - 33:25, 60:4, 60:11, 60:12, 70:21, 77:10, 77:23, 79:16, 167:4
requesting [4] - 44:20, 76:20, 77:5, 77:24
require [4] - 96:11, 148:6, 162:25, 165:13
required [3] - 120:19, 125:25, 126:11
requirements [1] - 50:12
requires [2] - 38:16, 69:22
reread [1] - 67:9
reroof [5] - 77:10, 77:16, 77:20, 77:23, 78:13
reschedule [1] - 202:12
research [2] - 59:23, 64:21
reservations [1] - 199:19
residence [2] - 113:7, 182:5
residences [2] - 115:18, 169:16
resident [1] - 101:11
residential [1] - 209:3
residual [1] - 190:18
respect [2] - 38:15, 58:22
response [53] - 7:8, 7:13, 8:2, 9:19, 10:5, 10:10, 13:2, 47:18, 62:11, 62:14, 74:4, 78:20, 82:21, 83:1, 84:20, 87:9, 91:8, 106:25, 112:2, 112:17, 116:19, 123:10, 123:17, 135:11, 139:4, 140:14, 142:17, 142:24, 146:1, 146:8, 146:15, 151:25, 161:5, 163:6, 165:4, 167:18, 167:24, 168:8, 171:22, 176:13, 176:19, 184:7, 186:23, 192:8, 194:13, 195:17, 195:20, 195:23, 196:10, 198:11, 198:14, 198:22, 199:9
responsibility [1] - 110:7
responsible [1] - 144:24
rest [6] - 25:19, 26:5, 65:9, 128:10, 128:19, 163:23
restoration [1] - 58:24
restore [3] - 94:8, 163:1, 209:4
restored [5] - 89:13, 90:14, 162:12, 162:25, 193:21
resubmit [1] - 16:2
result [2] - 58:5, 150:3
resume [1] - 112:9
retain [2] - 4:8, 57:22
retained [2] - 114:17, 170:12
retired [1] - 89:20
retrofit [3] - 17:4, 32:18, 54:25
return [2] - 66:14, 112:7
reveal [1] - 58:10

review [15] - 64:11, 118:6, 122:14, 122:15, 126:19, 128:22, 148:6, 154:11, 154:18, 157:1, 171:17, 205:5, 205:7, 206:5, 207:20
reviewed [1] - 209:17
reviewing [1] - 29:19
revise [1] - 204:11
revised [1] - 160:17
ribbon [5] - 169:5, 171:8, 173:13, 178:7, 182:2
ribbons [7] - 169:20, 171:5, 173:11, 173:12, 175:2, 178:7, 178:21
rid [1] - 29:7
right-of-way [6] - 75:23, 145:2, 175:17, 175:19, 176:1, 176:2
rip [2] - 55:1, 55:2
ripped [1] - 42:10
ripping [2] - 17:23, 28:16
Riverside [7] - 74:22, 100:25, 113:4, 115:17, 168:20, 169:14, 170:17
Road [1] - 16:9
road [8] - 187:20, 188:4, 188:9, 190:19, 191:25, 192:21, 193:3, 193:9
roof [17] - 75:2, 75:8, 76:9, 77:9, 77:15, 77:19, 78:1, 78:6, 80:24, 81:1, 81:18, 81:21, 140:4, 147:3, 147:23, 154:4, 168:23
roofing [4] - 77:12, 78:12, 81:11, 139:15
roofs [1] - 62:5
room [6] - 126:8, 199:19, 203:13, 203:16
Room [1] - 1:8
Rose [7] - 187:21, 188:5, 189:8, 190:15, 193:9, 194:2, 194:16
rose [3] - 188:13, 190:20, 190:23
rot [3] - 113:25, 119:9, 131:19
rotted [1] - 119:6
rotten [1] - 57:14
rough [2] - 38:12, 204:9
roughly [3] - 86:9, 130:11, 206:6
route [1] - 69:10
rows [1] - 186:9
rules [1] - 124:11
ruling [1] - 42:20
run [1] - 50:5
runs [2] - 170:3, 174:11
rust [1] - 31:15

S

sacrificing [1] - 100:21
safer [1] - 177:10
salesperson [1] - 50:7
sample [1] - 65:14
sampled [1] - 121:7
samples [1] - 47:15
sand [1] - 50:19
sash [16] - 23:9, 25:15, 27:3, 36:19, 36:22, 36:25, 52:8, 57:10, 57:17, 58:10, 58:19, 75:5, 90:23, 92:11, 168:24
sashes [5] - 21:13, 39:8, 57:13, 57:20, 95:2
sat [1] - 191:17
satisfaction [1] - 12:9
Save [2] - 186:1, 186:4
saves [1] - 128:13
saving [2] - 186:5, 186:13
saw [5] - 9:12, 17:14, 27:19, 105:17, 162:5
scale [3] - 76:4, 132:6, 209:5
scattered [3] - 113:24, 149:23, 160:7
scheduled [2] - 154:5, 187:6
schematic [2] - 34:20, 36:7
schematics [2] - 36:9, 160:24
school [1] - 201:8
scope [9] - 85:18, 86:17, 135:21, 139:13, 158:15, 159:4, 159:13, 159:15, 168:17
scopes [1] - 76:1
Scott [1] - 78:25
screen [28] - 26:23, 27:2, 28:7, 28:11, 28:12, 30:14, 30:22, 31:11, 31:17, 33:1, 33:15, 65:12, 65:14, 68:18, 68:21, 89:2, 89:4, 89:10, 90:20, 90:21, 90:24, 92:17, 93:9, 93:14, 99:9, 99:19, 104:16, 104:24
screens [15] - 26:21, 28:17, 68:17, 88:24, 89:7, 89:8, 90:10, 90:11, 90:18, 92:14, 104:5, 104:6, 104:13
screwed [1] - 25:24
se [1] - 144:25
seam [4] - 77:9, 77:18, 77:25, 78:2
search [1] - 159:10
second [26] - 7:6, 10:2, 63:2, 75:4, 84:8, 84:9, 85:2, 91:14, 111:17, 123:22, 143:4, 146:3, 147:19, 150:9, 162:1, 163:11, 164:18, 167:20, 176:25, 182:11, 182:12, 184:3, 193:11, 196:4, 198:20, 201:22
Secretary [3] - 57:25, 58:17, 170:10
Section [1] - 139:20
section [9] - 5:22, 6:4, 6:11, 6:15, 84:7, 101:7, 103:7, 115:14, 169:12
sections [1] - 5:12
see [87] - 15:14, 15:19, 16:1, 19:2, 20:10, 21:12, 21:13, 21:18, 21:20, 21:22, 22:5, 23:4, 25:17, 26:24, 27:8, 27:9, 28:13, 34:10, 35:12, 35:18, 36:2, 36:23, 38:1, 42:3, 44:18, 47:25, 48:16, 49:6, 49:11, 49:14, 50:22, 52:2, 52:18, 52:23, 53:8, 53:18, 54:20, 63:12, 64:13, 79:19, 79:24, 89:10, 90:15, 90:17, 99:3, 104:15, 106:7, 107:21, 107:22, 121:19, 122:6, 122:8, 122:9, 122:11, 122:13, 122:15, 124:17, 125:6, 125:8, 127:14, 128:24, 132:19, 134:5, 144:25, 145:11, 145:16, 152:25, 154:16, 162:7, 164:1, 172:20, 172:22, 173:7, 173:16, 173:21, 174:1, 174:4, 174:10, 174:13, 192:20, 202:10, 206:9, 206:10, 208:4, 209:25, 212:2
seeing [30] - 7:9, 10:11, 20:17, 20:24, 20:25, 21:23, 21:24, 22:2, 22:4, 27:1, 28:5, 28:12, 32:2, 39:2, 39:10, 43:13, 47:20, 48:25, 55:11, 62:12, 67:15, 91:9, 94:2, 112:4, 123:18, 124:1, 124:15, 158:25, 163:7
seek [2] - 80:4, 119:20
seeking [5] - 27:5, 79:14, 80:18, 80:20, 82:7
seeks [6] - 74:15, 85:14, 112:23, 139:10, 168:16, 188:9
seem [2] - 64:7, 64:19
selected [1] - 209:17
self [1] - 210:10
self-nominating [1] - 210:10
selfish [1] - 200:5
sell [1] - 54:17
selling [1] - 31:5
Selma [3] - 6:7, 168:4, 168:16
send [8] - 26:11, 33:14, 34:9, 40:16, 131:20, 203:17, 210:22, 210:23
sense [12] - 17:23, 19:15, 21:10, 47:7, 60:15, 98:22, 102:3, 109:24, 120:15, 162:18, 183:25, 187:9
sensing [1] - 135:12
sent [14] - 15:19, 15:22, 15:23, 19:1, 24:5, 25:5, 25:8, 25:12, 26:7, 34:19, 38:6, 42:6, 154:20, 155:16
sentence [2] - 4:2
separate [4] - 50:22, 126:8, 130:3, 143:13
separation [1] - 115:5
September [11] - 1:6, 2:1, 76:17, 77:1, 77:6, 78:10, 83:19, 83:24, 84:6, 162:9, 179:24
series [1] - 155:19
served [1] - 197:3
Service [4] - 100:10, 100:22, 102:9, 102:19
Services [5] - 175:15, 176:10, 182:20, 188:11, 190:5
set [4] - 23:25, 35:3, 71:25, 72:20
sets [1] - 85:25
setting [1] - 169:12
settings [1] - 115:14
seven [1] - 24:8
several [3] - 60:13, 188:23, 205:16
shaded [1] - 86:1
shadow [2] - 28:14, 92:9
shall [5] - 3:7, 78:9, 78:11, 83:22, 84:4
shame [1] - 144:20
shape [2] - 118:17, 143:25
share [4] - 11:13, 33:11, 55:19, 74:3
shared [2] - 74:25, 75:24
sharing [1] - 174:20
shears [1] - 96:10
shed [1] - 147:23
shingle [8] - 75:3, 75:9, 77:15, 78:6, 82:15, 151:18, 160:6
shingles [15] - 75:2, 75:9, 77:17, 77:21, 78:2, 78:12, 78:14, 81:5, 81:25, 147:8, 148:14, 148:18, 148:22, 151:19, 153:18
shining [1] - 119:10
Shipyards [1] - 197:24
shocked [1] - 105:21
shortly [2] - 116:7, 203:18
show [12] - 36:15, 48:15, 51:22, 54:5, 119:2, 121:8,

128:22, 154:23, 173:6, 180:16, 181:4, 200:18
showcase [2] - 207:4, 208:24
showcasing [1] - 209:10
showed [1] - 27:7
showing [5] - 28:1, 36:19, 54:9, 128:17, 182:2
shown [3] - 63:18, 84:17, 198:19
showrooms [2] - 107:12, 107:18
shows [1] - 89:9
shutters [2] - 92:10, 94:2
sic [19] - 10:1, 17:8, 18:11, 67:14, 95:11, 100:14, 105:8, 109:13, 119:8, 119:24, 120:2, 121:11, 124:14, 152:9, 155:21, 155:22, 161:1, 187:9, 201:17
side [26] - 36:5, 53:9, 54:7, 79:24, 80:2, 85:20, 85:22, 86:1, 95:22, 95:24, 97:23, 97:25, 98:5, 98:8, 104:9, 115:18, 130:12, 133:21, 147:5, 147:17, 169:5, 169:15, 170:1, 170:3, 181:10, 206:21
sides [3] - 35:22, 53:2, 97:10
siding [63] - 37:17, 38:15, 39:1, 42:15, 49:5, 54:19, 63:8, 63:13, 75:4, 76:8, 112:24, 113:10, 113:21, 113:22, 113:23, 114:3, 114:9, 114:13, 114:14, 119:9, 124:19, 124:23, 127:16, 127:25, 128:21, 128:22, 130:20, 130:22, 131:5, 131:7, 133:17, 138:15, 147:4, 147:7, 147:10, 147:11, 148:3, 148:15, 148:19, 149:18, 149:19, 149:21, 149:24, 149:25, 151:10, 151:18, 151:20, 152:22, 153:20, 154:3, 154:7, 154:8, 160:4, 161:24, 161:25, 163:17, 163:19, 163:20, 163:22, 163:25
signed [1] - 206:1
significance [3] - 46:6, 113:20, 191:15
significant [4] - 115:16, 169:13, 190:21, 193:22
significantly [1] - 25:18
silence [1] - 3:6
silicone [1] - 107:6
similar [7] - 15:1, 59:22, 60:1, 60:3, 99:10, 135:17, 163:19
Simonton [2] - 155:15, 155:23
simply [1] - 31:6
simulating [1] - 20:7
Simultaneous [5] - 19:21, 72:25, 110:10, 156:16, 181:21
single [18] - 28:20, 29:2, 29:12, 31:22, 32:5, 42:7, 49:10, 52:5, 52:13, 100:16, 115:4, 124:18, 147:23, 150:7, 155:14, 155:20, 158:6, 162:13
single-hung [10] - 28:20, 29:2, 29:12, 31:22, 32:5, 49:10, 52:5, 52:13, 155:14, 155:20
single-pane [1] - 100:16
single-story [2] - 147:23, 162:13
sit [2] - 200:7, 212:10
site [13] - 148:9, 153:16, 168:13, 168:19, 169:10, 172:23, 179:7, 179:14, 179:16, 180:2, 180:13, 182:1, 190:6
sits [1] - 26:18
sitting [1] - 119:15
situation [2] - 16:22, 94:1
six [1] - 188:8
sixteenths [1] - 95:9
size [13] - 23:8, 23:13, 84:1, 115:8, 115:25, 125:6, 125:10, 125:12, 125:17, 125:20, 133:14, 156:19, 156:20
sizes [1] - 125:15
skinny [1] - 22:12
skipped [1] - 163:16
slash [1] - 175:8
slide [1] - 173:6
slider [1] - 47:16
slight [1] - 188:3
slightly [1] - 29:12
slip [5] - 17:10, 39:9, 42:4, 42:13, 69:7
slip-in [1] - 42:13
slipped [1] - 48:3
slips [1] - 157:23
slogan [1] - 210:25
slope [1] - 53:12
slow [2] - 140:1, 159:10
small [2] - 120:10, 201:15
smaller [2] - 70:4, 209:5
smooth [1] - 18:12
snap [1] - 53:14
snitched [1] - 34:4
social [1] - 211:7
society [1] - 121:11
sold [1] - 89:4
solely [1] - 58:18
solid [3] - 31:14, 31:17, 171:6
solution [9] - 30:7, 65:20, 65:22, 68:14, 125:14, 125:17, 136:6, 136:12, 177:10
someone [1] - 189:14
someplace [1] - 43:8
sometimes [4] - 157:22, 157:23, 193:6, 200:6
somewhat [1] - 89:19
sorry [34] - 10:1, 11:6, 12:1, 19:25, 20:3, 22:17, 25:10, 33:2, 34:6, 49:13, 52:11, 53:24, 54:9, 67:5, 68:2, 72:8, 83:7, 84:2, 86:8, 100:13, 107:1, 107:2, 107:23, 118:13, 130:25, 140:1, 158:25, 176:4, 178:16, 180:12, 192:14, 200:22, 202:16
sort [11] - 31:25, 38:14, 38:18, 63:10, 65:3, 101:9, 104:10, 122:2, 144:9, 145:13, 206:21
sound [2] - 144:12, 200:4
sounds [7] - 70:19, 83:14, 123:13, 130:23, 151:9, 208:21
South [1] - 140:22
southerly [1] - 174:3
space [3] - 76:15, 208:12, 208:13
spaces [1] - 170:14
span [1] - 212:5
SPAR [2] - 190:14, 191:3
speaker [3] - 6:24, 18:19, 172:3
speaker's [4] - 3:12, 116:25, 152:6, 172:12
speaking [10] - 16:21, 19:21, 25:12, 44:3, 66:2, 69:20, 72:25, 110:10, 156:16, 181:21
special [4] - 88:15, 88:17, 95:13, 105:10
special-ordered [1] - 105:10
specific [13] - 17:5, 63:21, 66:19, 71:12, 100:1, 101:6, 101:19, 102:1, 102:21, 103:20, 107:24, 133:14, 145:12
specifically [9] - 46:21, 48:18, 48:20, 58:1, 78:8, 100:7, 101:22, 102:8, 134:12
specification [1] - 88:15
specifications [3] - 86:11, 108:21, 154:23
specifics [1] - 99:24
specify [1] - 158:14
specs [3] - 126:23, 153:2, 154:16
speculated [1] - 188:20
spindles [2] - 150:24, 160:11
spirit [1] - 178:8
spoken [1] - 186:13
spot [3] - 128:5, 129:17, 177:16
spray [1] - 53:12
Springfield [4] - 140:7, 185:13, 188:14, 190:13
square [1] - 132:20
Sr [1] - 197:11
St [3] - 5:16, 74:15, 79:1
stability [2] - 24:14, 131:18
stabilize [2] - 166:7, 166:11
stabilizing [1] - 165:20
staff [120] - 3:13, 3:25, 4:8, 4:22, 6:24, 8:9, 9:10, 10:23, 10:25, 11:9, 11:12, 11:15, 11:17, 11:21, 13:1, 44:1, 44:25, 45:24, 62:15, 65:1, 67:22, 70:9, 70:10, 72:13, 72:16, 72:17, 73:7, 74:11, 75:21, 76:12, 76:21, 76:24, 77:11, 77:14, 77:20, 78:4, 78:7, 78:18, 80:1, 82:12, 83:10, 85:11, 86:16, 87:8, 88:7, 91:18, 100:5, 102:14, 108:1, 108:12, 109:10, 111:2, 111:10, 112:19, 113:23, 115:3, 116:10, 116:18, 126:19, 128:6, 129:17, 132:9, 133:13, 134:3, 135:15, 136:5, 136:12, 138:4, 139:6, 139:17, 140:8, 140:13, 146:4, 146:17, 148:9, 148:12, 149:13, 149:22, 150:10, 150:20, 151:5, 151:7, 151:24, 153:16, 157:8, 159:12, 162:22, 163:15, 165:5, 165:11, 166:1, 166:24, 168:10, 170:21, 171:7, 171:21, 175:8,

175:24, 177:4, 177:19, 180:8, 180:13, 182:6, 188:3, 188:19, 189:11, 189:13, 190:9, 191:12, 195:15, 198:10, 199:17, 204:10, 204:19, 204:21, 205:8, 206:18, 207:18
staff's [4] - 164:25, 177:22, 188:15, 195:1
stand [5] - 12:11, 60:5, 65:3, 80:20, 206:23
standard [7] - 23:25, 88:10, 88:22, 95:13, 95:14, 105:24, 132:19
Standard [2] - 170:9, 170:11
Standards [2] - 57:25, 170:10
standards [3] - 59:3, 101:1, 101:2
standing [4] - 77:9, 77:18, 77:25, 78:2
standpoint [2] - 40:25, 132:7
stands [2] - 12:12, 190:20
start [9] - 6:22, 28:16, 62:25, 177:3, 181:15, 181:23, 200:18, 201:19, 211:18
started [4] - 26:23, 157:18, 200:12, 202:1
starting [2] - 132:4, 163:14
state [14] - 3:17, 8:16, 13:6, 16:5, 17:7, 56:12, 65:11, 78:22, 81:19, 87:14, 100:12, 140:19, 152:5, 172:1
STATE [1] - 213:3
State [2] - 1:10, 186:1
statement [1] - 81:2
States [1] - 102:24
states [1] - 58:1
stationary [1] - 29:6
status [1] - 205:14
stay [2] - 10:16, 41:10
stays [2] - 35:23, 155:25
stem [1] - 197:8
stemming [1] - 207:13
stems [1] - 166:14
stenographic [1] - 213:11
stenographically [1] - 213:9
steps [8] - 135:10, 147:21, 148:25, 150:19, 150:21, 151:16, 160:10, 164:19
Steve [1] - 8:18
Steven [1] - 8:19
sticking [1] - 183:16
stiles [1] - 25:19
still [21] - 12:12, 15:14, 26:5, 35:14, 36:24, 39:1, 40:11, 48:24, 57:20, 60:17, 93:9, 103:11, 104:22, 107:18, 107:21, 154:10, 154:12, 156:25, 160:5, 173:3, 190:20
stipulation [1] - 38:18
Stockton [1] - 5:5
stone [3] - 20:4, 30:20, 54:16
stop [3] - 41:6, 98:14, 148:21
stops [4] - 17:9, 39:8, 95:17, 107:19
storm [18] - 85:15, 86:4, 86:19, 93:8, 93:10, 93:14, 96:23, 99:8, 99:22, 100:16, 100:19, 101:23, 101:24, 102:8, 102:10, 103:7, 104:8, 104:14
story [18] - 74:16, 74:18, 75:1, 75:4, 75:13, 113:6, 140:3, 147:1, 147:23, 150:5, 150:7, 158:21, 162:10, 162:13, 162:19, 168:22
straight [3] - 32:1, 174:9, 174:12
strategy [1] - 63:15
streaming [2] - 128:18, 128:24
streamline [1] - 71:25
streamlined [1] - 212:8
street [35] - 6:14, 60:3, 64:22, 75:25, 107:22, 115:18, 120:12, 120:16, 121:5, 121:6, 139:11, 139:14, 139:19, 148:1, 148:2, 169:15, 180:20, 187:20, 188:12, 188:16, 188:25, 189:2, 189:3, 189:7, 194:15, 194:25, 195:7, 195:8, 195:9, 195:12, 196:2, 197:4, 197:19, 198:7, 198:18
Street [53] - 1:8, 5:1, 5:3, 5:9, 5:18, 5:23, 5:24, 6:1, 6:8, 7:18, 10:21, 13:10, 56:16, 85:5, 85:14, 87:20, 112:14, 112:23, 117:5, 117:7, 138:25, 139:10, 146:13, 146:22, 152:9, 161:14, 168:4, 168:16, 187:21, 188:2, 188:5, 188:18, 188:21, 189:1, 189:8, 190:8, 190:17, 193:9, 194:16, 194:21, 195:2, 195:12, 196:2, 196:12, 196:16, 197:1, 197:11, 197:15, 198:18, 199:11, 201:17, 201:18
street-visible [5] - 139:11, 139:14, 139:19, 148:1, 148:2
streets [1] - 183:8
streetscape [4] - 115:15, 139:25, 144:6, 169:12
strength [1] - 23:24
striking [1] - 83:5
stringent [1] - 102:21
stripping [1] - 58:14
strong [2] - 105:15, 105:16
structural [8] - 50:12, 107:6, 119:9, 119:16, 119:18, 130:9, 131:18, 166:17
structurally [2] - 124:2, 144:12
structure [69] - 24:14, 29:22, 45:10, 45:12, 46:7, 54:1, 74:16, 74:17, 74:18, 74:25, 75:7, 75:12, 75:15, 75:17, 76:6, 76:11, 76:14, 76:21, 76:24, 77:10, 77:13, 77:15, 77:17, 77:19, 77:25, 78:5, 78:9, 78:11, 79:17, 80:6, 83:22, 84:4, 85:17, 85:20, 85:22, 86:6, 87:1, 101:9, 113:1, 113:7, 113:11, 113:18, 114:2, 114:10, 114:13, 114:15, 114:24, 115:1, 115:2, 115:7, 116:12, 118:10, 118:14, 118:16, 118:25, 125:11, 125:25, 126:11, 139:12, 139:22, 140:2, 146:23, 147:1, 148:13, 148:23, 149:9, 164:10, 168:22, 169:6
structure's [1] - 150:3
structures [12] - 44:17, 82:4, 84:14, 84:16, 86:2, 102:23, 139:24, 174:5, 186:7, 188:23, 188:25, 195:6
struggling [1] - 96:19
stucco [2] - 47:10, 75:4
stuck [1] - 58:19
studs [1] - 119:14
stuff [1] - 211:25
stumps [1] - 174:10
style [5] - 15:1, 132:18, 133:7, 147:2, 181:5
style-wise [1] - 133:7
subject [21] - 75:21, 75:24, 86:3, 113:5, 113:18, 114:23, 116:1, 122:19, 139:21, 168:21, 169:23, 169:25, 170:6, 170:21, 188:12, 188:25, 194:25, 195:7, 197:4, 197:18, 205:13
submission [1] - 119:23
submissions [1] - 201:3
submit [9] - 4:9, 6:24, 87:13, 135:21, 152:5, 172:3, 172:12, 205:1, 209:19
submitted [16] - 77:1, 77:6, 83:19, 83:23, 84:5, 89:9, 120:1, 122:6, 122:9, 122:14, 122:18, 126:24, 154:19, 159:2, 204:9, 205:8
subsequently [2] - 83:22, 84:5
substantial [1] - 119:8
successful [1] - 190:8
successfully [1] - 205:19
suggestion [1] - 200:23
suggestions [3] - 130:16, 130:21, 199:20
Suite [1] - 189:24
summarize [2] - 70:16, 78:7
summary [2] - 68:12, 83:11
sun [9] - 85:25, 95:23, 96:17, 96:21, 96:24, 97:2, 97:9, 98:3, 98:25
sunlight [2] - 97:20, 97:22
super [1] - 64:6
Supervisor [1] - 1:17
support [10] - 3:7, 6:12, 144:23, 183:6, 183:14, 185:7, 186:19, 187:11, 191:9, 211:11
supportive [1] - 86:16
supposed [2] - 128:2, 172:10
surface [1] - 169:21
surrounding [3] - 115:21, 139:24, 169:18
surveillance [1] - 128:16
survey [2] - 46:1, 164:5
swear [3] - 117:8, 152:11, 172:5
sweeps [1] - 125:8
switch [1] - 49:10
switching [1] - 29:1
sworn [12] - 16:6, 56:13, 59:12, 78:23, 87:15, 117:1, 140:19, 152:6, 172:2, 172:10,

172:11, 172:14
symmetrical [1] - 140:3
symmetry [1] - 145:13
sympathetic [1] - 104:25
system [11] - 17:21, 17:25, 29:11, 29:13, 36:2, 39:6, 39:9, 42:11, 54:25, 55:4, 57:21
systems [2] - 35:14, 59:21

T

table [2] - 4:15, 71:4
talks [1] - 102:9
tall [2] - 47:23
taller [1] - 86:2
tape [6] - 24:3, 24:17, 26:12, 35:4, 35:9, 35:12
Task [1] - 204:3
task [1] - 204:17
tax [2] - 103:21, 209:23
technologies [1] - 102:25
ten [5] - 3:8, 4:5, 52:25, 81:8, 82:8
ten-minute [1] - 3:8
tenant [1] - 190:4
tend [1] - 84:21
term [1] - 145:9
terminology [2] - 36:3, 39:21
termite [1] - 12:4
terms [8] - 12:6, 12:8, 12:11, 12:14, 127:8, 132:18, 178:3, 207:25
Terrace [4] - 185:12, 188:16, 188:17, 188:20
testimony [10] - 13:13, 16:15, 56:19, 79:6, 88:1, 117:13, 117:23, 141:3, 152:16, 161:17
texture [1] - 114:8
THE [288] - 2:3, 2:15, 3:1, 7:7, 7:9, 7:12, 7:14, 8:3, 8:8, 8:16, 8:21, 9:1, 9:15, 9:17, 9:20, 10:3, 10:6, 10:9, 10:11, 11:4, 11:8, 11:11, 12:15, 12:25, 13:3, 13:6, 13:12, 13:17, 15:7, 16:4, 16:8, 16:11, 16:14, 16:19, 18:18, 20:1, 23:18, 34:12, 37:7, 41:23, 44:1, 55:15, 55:22, 55:25, 56:4, 56:7, 56:11, 56:18, 56:23, 59:5, 59:9, 59:11, 59:15, 62:8, 62:12, 62:15, 62:21, 63:3, 65:24, 66:17, 68:6, 70:7, 70:18, 73:6, 73:20, 74:5, 74:8, 78:17, 78:21, 79:2, 79:5, 79:10, 82:19, 82:22, 82:24, 83:2, 83:10, 84:8, 84:10, 84:19, 84:21, 84:25, 85:9, 87:7, 87:10, 87:13, 87:19, 87:22, 87:25, 88:5, 91:1, 91:5, 91:9, 91:15, 92:16, 92:23, 93:2, 93:24, 101:18, 102:4, 106:14, 106:16, 106:19, 109:25, 110:2, 110:5, 110:11, 110:14, 110:19, 110:25, 111:7, 111:9, 111:13, 111:16, 111:22, 112:1, 112:3, 112:9, 112:18, 116:17, 116:20, 116:23, 117:8, 117:12, 117:17, 117:19, 117:22, 118:2, 118:3, 118:11, 120:22, 120:24, 121:15, 121:19, 121:22, 123:8, 123:11, 123:15, 123:18, 123:23, 124:25, 125:2, 125:17, 126:4, 126:7, 127:13, 127:23, 128:12, 129:15, 129:19, 129:23, 130:2, 130:14, 130:18, 131:2, 131:22, 131:24, 132:9, 133:11, 134:3, 134:17, 135:9, 135:12, 135:24, 136:4, 136:10, 137:22, 138:1, 138:3, 138:6, 138:8, 138:18, 138:21, 138:24, 139:5, 140:13, 140:15, 140:18, 140:24, 141:2, 141:7, 141:21, 142:5, 142:11, 142:15, 142:18, 142:21, 142:25, 143:5, 144:22, 145:24, 146:2, 146:7, 146:9, 146:16, 151:4, 151:23, 152:1, 152:4, 152:11, 152:15, 152:20, 153:7, 158:8, 158:12, 159:4, 159:8, 159:11, 160:14, 161:3, 161:6, 161:9, 161:16, 161:21, 163:3, 163:7, 163:12, 165:2, 165:5, 165:15, 166:1, 167:16, 167:19, 167:23, 167:25, 168:9, 171:20, 171:23, 172:1, 172:8, 174:24, 176:11, 176:14, 176:17, 176:20, 177:1, 179:22, 180:8, 180:12, 180:18, 181:1, 181:4, 181:11, 182:25, 183:4, 184:2, 184:6, 184:8, 184:14, 184:20, 186:21, 186:24, 187:14, 187:18, 189:10, 192:4, 192:9, 192:12, 192:16, 193:12, 194:5, 194:10, 194:12, 194:14, 195:15, 195:18, 195:21, 195:24, 196:5, 196:9, 196:11, 198:9, 198:12, 198:15, 198:21, 198:23, 199:2, 199:6, 199:8, 199:10, 200:24, 202:6, 203:22, 204:1, 205:10, 206:14, 211:11, 212:16
theme [2] - 189:2, 195:8
themselves [5] - 58:20, 101:2, 177:11, 177:15, 209:8
therefore [6] - 4:8, 57:22, 59:1, 75:24, 86:20, 170:21
they've [5] - 46:6, 84:17, 124:11, 137:4, 211:25
thick [14] - 19:3, 21:14, 24:10, 27:13, 29:5, 38:20, 48:19, 63:7, 63:8, 63:25, 64:6, 69:24, 95:9, 137:20
thicker [5] - 21:10, 23:24, 37:15, 50:1, 53:16
thickness [13] - 21:1, 22:5, 22:8, 23:4, 24:2, 24:9, 26:19, 27:3, 27:4, 49:1, 49:24, 69:2, 88:12
thinking [7] - 39:23, 40:5, 65:5, 109:2, 142:13, 165:18, 203:9
thinner [2] - 27:17, 31:24
third [2] - 44:17, 160:9
Thomas [1] - 2:20
THOMAS [1] - 1:15
thoughts [22] - 40:21, 46:14, 46:18, 48:8, 55:14, 55:17, 65:24, 73:10, 84:12, 84:19, 99:12, 101:10, 125:4, 127:16, 131:25, 132:1, 135:9, 135:10, 165:2, 166:1, 183:20, 205:1
thousands [1] - 205:17
three [22] - 3:22, 5:22, 6:13, 20:23, 23:13, 24:9, 26:16, 44:21, 53:7, 53:19, 65:18, 95:9, 112:13, 122:5, 124:21, 129:25, 142:10, 165:8, 165:10, 182:10, 187:19, 192:10
three-and-a-quarter [1] - 24:9
three-quarter [2] - 26:16, 53:19
three-quarters [1] - 20:23
three-sixteenths [1] - 95:9
thriving [1] - 185:18
throughout [3] - 82:3, 86:6, 102:23
throw [2] - 176:22, 183:4
throwing [3] - 61:22, 99:21, 212:13
Tides [1] - 172:18
ties [1] - 197:4
tight [2] - 126:15, 126:17
Tikhonov [1] - 152:8
TIKHONOV [21] - 152:14, 152:19, 152:21, 153:13, 153:24, 154:2, 154:19, 155:3, 155:5, 155:15, 155:21, 156:7, 156:14, 157:3, 157:12, 158:10, 158:17, 158:20, 159:2, 160:25, 161:8
tilt [2] - 51:25, 52:1
tilting [1] - 52:2
timeline [1] - 193:24
Timer [3] - 62:4, 89:24, 120:21
tint [9] - 86:24, 96:6, 100:6, 101:4, 101:9, 101:22, 104:7, 108:24, 110:18
tint's [1] - 97:1
tinted [23] - 85:15, 85:21, 86:9, 86:18, 86:21, 88:8, 88:12, 88:14, 90:16, 90:25, 91:21, 92:6, 95:10, 95:14, 96:3, 96:4, 96:21, 97:8, 98:16, 104:25, 105:20, 109:23
tinting [4] - 96:6, 96:12, 98:14, 102:2
today [24] - 3:11, 4:13, 5:7, 6:21, 14:20, 62:10, 66:8, 80:20, 85:4, 106:18, 111:20, 118:5, 118:8, 118:14, 121:8, 141:25, 154:20, 160:18, 178:22, 179:20, 182:2, 185:2, 187:6, 212:3
today's [2] - 89:1, 179:21
together [5] - 35:6, 50:17, 50:18, 123:1, 130:9
tomorrow [1] - 81:18

tonight [1] - 34:8
took [4] - 89:14, 89:17, 123:2, 190:14
tooken [1] - 161:1
top [27] - 6:22, 15:16, 20:19, 20:20, 28:24, 29:2, 29:6, 32:4, 35:18, 35:22, 36:5, 36:12, 36:22, 37:3, 49:23, 52:8, 54:12, 63:19, 79:24, 90:12, 92:5, 92:15, 93:8, 103:23, 132:21, 133:8, 156:20
torn [2] - 104:15, 165:20
totaling [2] - 149:8, 149:10
totally [3] - 121:12, 130:15, 202:20
touch [2] - 154:2, 186:10
touched [1] - 120:7
toward [1] - 145:1
traced [1] - 197:1
Trail [1] - 59:14
transaction [2] - 118:16, 131:16
transcript [1] - 213:10
transfer [1] - 85:25
transition [1] - 182:4
translation [1] - 14:9
transmittance [3] - 86:14, 86:20, 86:23
transom [1] - 147:5
trees [2] - 86:2, 174:14
tried [1] - 34:23
trim [24] - 20:13, 20:15, 20:19, 20:20, 20:22, 21:14, 31:25, 35:21, 37:18, 37:19, 38:11, 38:16, 38:19, 48:4, 49:3, 51:19, 52:20, 53:15, 54:19, 55:1, 63:12, 63:16, 69:17, 155:25
Trimmer [2] - 189:22, 189:24
TRIMMER [3] - 189:23, 191:17, 192:10
tripped [1] - 102:11
Tropia [3] - 1:9, 213:7, 213:18
true [2] - 80:12, 213:10
truth [30] - 13:14, 13:15, 16:16, 16:17, 56:20, 56:21, 79:7, 79:8, 88:2, 88:3, 117:14, 117:15, 117:24, 117:25, 141:4, 141:5, 152:17, 152:18, 161:18, 161:19
try [13] - 12:20, 13:20, 14:18, 21:21, 29:14, 61:15, 66:18, 67:2, 111:3, 157:20, 157:21, 205:9
trying [20] - 13:25, 18:10, 24:25, 30:6, 35:10, 47:2, 51:8, 60:4, 60:9, 60:23, 60:24, 64:8, 94:3, 94:6, 97:17, 97:19, 109:3, 123:1, 151:7, 192:17
tucked [1] - 32:4
two [55] - 3:9, 5:15, 40:14, 45:21, 59:19, 62:16, 62:19, 74:16, 75:1, 75:13, 79:20, 79:25, 80:2, 80:13, 89:7, 94:11, 115:2, 115:3, 122:5, 124:17, 125:9, 125:15, 125:21, 125:24, 126:8, 126:12, 126:20, 127:3, 130:3, 133:23, 139:10, 139:14, 140:3, 142:10, 144:6, 144:9, 147:1, 149:10, 150:5, 158:21, 160:3, 162:10, 162:19, 164:15, 164:16, 168:22, 168:23, 194:17, 196:21, 200:5, 201:13, 204:21
two-and-a-half-year-old [1] - 200:5
two-car [1] - 115:2
two-part [1] - 94:11
two-story [11] - 74:16, 75:1, 75:13, 140:3, 147:1, 150:5, 158:21, 162:10, 162:19, 168:22
type [8] - 44:5, 44:13, 81:10, 89:18, 107:8, 130:21, 159:22, 208:5
types [2] - 44:21, 104:11
typical [1] - 135:2
typically [3] - 132:19, 132:25, 183:6
typo [1] - 188:3

U

ugly [1] - 31:1
ultimately [1] - 201:10
unanimously [1] - 10:12
unbelievable [1] - 89:15
under [8] - 5:12, 5:22, 52:20, 195:3, 202:6, 203:23, 204:2, 211:18
underbelly [1] - 32:3
undergoing [1] - 204:23
underlying [1] - 147:10
underneath [2] - 53:13, 161:25
underway [1] - 198:1
undone [1] - 81:20
unfold [1] - 206:9
unfortunate [1] - 144:20
unfortunately [3] - 54:24, 124:10, 185:23
uniformity [1] - 76:15
unimproved [1] - 169:1
unique [2] - 44:4, 70:1
unit [1] - 69:7
United [1] - 102:23
unknown [1] - 115:23
unless [11] - 3:24, 40:17, 45:9, 55:23, 69:10, 88:15, 95:13, 115:19, 131:6, 156:5, 169:16
unlisted [5] - 74:17, 75:7, 113:7, 113:19, 118:25
up [125] - 4:1, 6:9, 8:5, 8:14, 10:19, 16:24, 17:14, 18:15, 20:22, 21:25, 24:3, 26:12, 26:19, 27:2, 29:1, 29:2, 29:6, 30:7, 33:15, 34:10, 35:3, 35:8, 35:19, 35:21, 37:5, 39:4, 40:17, 48:3, 49:10, 49:23, 52:8, 53:3, 53:9, 53:10, 54:6, 55:19, 56:11, 62:3, 65:11, 66:20, 67:18, 68:13, 72:1, 72:20, 78:22, 81:14, 84:14, 89:1, 90:18, 90:20, 91:1, 91:3, 91:18, 92:24, 95:8, 95:16, 96:23, 98:2, 98:17, 99:9, 99:10, 101:4, 102:11, 105:11, 105:18, 106:20, 109:19, 112:11, 118:15, 119:19, 119:20, 120:8, 120:10, 120:17, 120:24, 123:12, 124:3, 129:21, 133:6, 134:14, 135:20, 135:25, 136:7, 137:21, 138:4, 140:18, 142:19, 143:11, 155:17, 157:9, 157:10, 160:16, 161:6, 161:11, 162:5, 162:16, 166:19, 172:1, 172:20, 173:1, 173:17, 175:14, 176:14, 177:14, 184:11, 184:15, 184:21, 184:22, 186:13, 186:14, 187:19, 189:18, 190:13, 191:21, 194:17, 200:14, 200:18, 202:14, 205:22, 206:8, 206:11, 206:19, 207:12, 210:1, 212:8
update [5] - 11:18, 187:13, 204:20, 204:23, 205:14
updated [1] - 12:1
uphold [1] - 59:2
uploaded [1] - 38:3
upper [4] - 95:1, 150:25, 160:11, 162:16
ups [1] - 204:3
upstairs [2] - 69:1, 69:16
urge [2] - 59:1, 162:25
usable [1] - 204:8
utilities [5] - 177:5, 177:10, 177:13, 183:16, 183:25
utility [1] - 173:18
utilize [2] - 57:21, 102:24
utilized [1] - 115:2
utilizes [2] - 150:16, 170:22
utilizing [1] - 88:20
UV [9] - 95:5, 95:19, 105:18, 105:19, 105:24, 106:4, 106:8, 107:20

V

vague [2] - 100:12, 103:11
valuation [1] - 45:18
variances [1] - 32:7
various [1] - 107:7
varying [1] - 147:14
verification [2] - 4:17, 109:11
verify [2] - 109:14, 110:9
vernacular [3] - 75:1, 113:6, 147:2
versus [5] - 24:18, 63:19, 80:13, 104:25, 165:23
via [1] - 72:2
view [2] - 26:13, 108:10
viewable [1] - 84:13
vinyl [71] - 17:2, 21:4, 23:16, 23:22, 23:24, 24:6, 25:9, 28:21, 31:23, 32:18, 40:12, 40:18, 40:25, 41:3, 41:9, 41:20, 42:1, 42:2, 42:8, 42:9, 42:17, 42:21, 42:23, 43:24, 44:20, 46:16, 46:18, 47:19, 47:20, 48:2, 49:25, 50:9, 50:10, 51:4, 51:7, 55:12, 58:25, 59:22, 59:25, 60:1, 60:6, 60:10, 60:11, 60:12, 60:14, 60:15, 60:16, 62:2, 65:2, 65:23, 66:2, 67:14, 73:12, 113:10, 113:21, 114:3, 114:9, 124:19, 124:22, 127:18, 127:20, 129:18, 130:23, 147:15, 149:12, 149:15, 156:18, 164:4, 164:8
vinyl/aluminum [1] - 114:12
violation [4] - 136:19, 166:12, 204:6
violations [1] - 141:15
virtually [1] - 14:22
visibility [4] - 80:9,

90:22, 107:19, 108:4
visible [16] - 47:3, 51:19, 75:25, 80:17, 86:14, 86:19, 86:22, 86:25, 106:7, 134:16, 139:11, 139:14, 139:19, 148:1, 148:2, 148:20
visit [4] - 148:9, 148:12, 153:16, 154:5
visual [2] - 114:8, 145:3
Vitaly [1] - 152:8
VLT [10] - 86:13, 88:9, 88:11, 88:13, 88:17, 89:3, 89:5, 105:25, 107:4, 109:1
volunteered [1] - 204:17
vote [11] - 9:10, 71:18, 135:13, 135:15, 136:7, 183:19, 192:22, 194:8, 196:6, 209:19, 211:4
voted [1] - 10:12
votes [1] - 211:3
voting [3] - 138:6, 145:4, 210:5

W

wait [3] - 34:12, 124:25, 166:5
waiting [2] - 141:17, 206:2
walkable [1] - 183:7
walked [3] - 17:14, 42:6, 55:7
walking [1] - 161:11
walkways [1] - 74:21
wall [7] - 17:24, 52:16, 76:15, 77:4, 80:7, 171:14, 181:13
walls [1] - 119:14
wants [7] - 29:19, 29:23, 64:13, 68:13, 70:12, 71:1, 105:4
warrantied [1] - 51:1
warranties [1] - 56:2
warranty [3] - 31:17, 51:14, 82:4
water [3] - 86:6, 201:21
Waters [1] - 16:7
WATERS [92] - 16:9, 16:13, 16:18, 16:20, 18:23, 19:5, 19:12, 19:16, 20:8, 20:17, 20:20, 21:3, 21:16, 22:9, 22:16, 22:22, 23:1, 23:10, 23:15, 23:21, 25:2, 25:9, 25:14, 25:22, 26:2, 26:10, 26:15, 27:12, 27:16, 27:22, 28:4, 28:10, 28:19, 30:1, 30:5, 30:9, 31:4, 32:14, 32:17, 32:21, 33:8, 33:13, 33:16, 34:5, 34:9, 34:14, 35:2, 35:17, 36:4, 36:8, 36:11, 36:15, 37:1, 37:4, 37:10, 37:20, 37:23, 37:25, 38:21, 38:24, 39:17, 40:23, 41:16, 41:21, 41:25, 45:21, 47:14, 49:7, 49:15, 49:18, 50:3, 50:25, 51:12, 51:21, 52:17, 52:24, 53:21, 54:2, 54:5, 54:14, 54:20, 54:24, 55:21, 55:23, 56:1, 56:5, 68:16, 69:25, 73:4, 73:8, 73:14, 73:17
ways [4] - 49:19, 128:25, 208:15, 210:3
WDO [7] - 12:2, 13:25, 14:4, 128:22, 131:16, 131:19, 138:12
wealthy [1] - 89:19
wear [1] - 31:2
web [1] - 211:2
website [1] - 210:23
Wednesday [2] - 1:6, 202:24
week [1] - 202:17
weight [1] - 57:21
weird [2] - 99:17, 200:17
welcome [2] - 2:5, 10:16
welded [1] - 51:1
WELLS [41] - 1:17, 2:11, 11:14, 44:7, 45:5, 46:3, 62:18, 72:19, 72:23, 73:2, 108:17, 111:6, 126:25, 127:6, 135:19, 136:17, 137:2, 160:15, 165:9, 166:9, 166:14, 175:12, 176:5, 177:23, 187:4, 187:17, 187:19, 189:16, 194:19, 196:15, 199:14, 200:22, 200:25, 203:4, 203:10, 203:14, 205:3, 205:21, 207:6, 208:11, 210:6
Wells [6] - 2:11, 11:12, 33:7, 72:16, 72:18, 187:3
west [3] - 86:1, 97:23, 174:12
West [12] - 5:1, 5:24, 7:18, 56:15, 103:9, 139:1, 139:10, 161:13, 184:25, 185:16, 185:23, 197:25
whatnot [1] - 166:18
whereas [4] - 32:2, 35:7, 35:23, 37:13
white [6] - 29:8, 48:2, 53:8, 155:14, 155:20, 185:21
Whoa [1] - 47:19
whole [36] - 13:14, 16:16, 16:22, 17:7, 17:23, 21:1, 29:7, 36:1, 36:21, 39:9, 42:6, 42:11, 42:16, 46:16, 55:3, 56:20, 64:1, 68:22, 69:5, 79:7, 88:2, 117:14, 117:24, 119:7, 123:1, 131:17, 131:18, 141:4, 151:15, 152:17, 155:5, 156:14, 161:18, 163:25, 191:7, 208:14
wholesale [7] - 112:24, 127:25, 128:4, 128:21, 147:7, 147:13, 149:7
wide [8] - 47:22, 120:6, 120:16, 121:5, 121:8, 121:9, 130:6, 173:13
widely [2] - 188:19, 204:7
widening [1] - 112:25
wider [3] - 45:8, 116:4, 120:15
width [11] - 113:8, 115:9, 115:12, 115:23, 126:1, 130:5, 133:14, 134:22, 135:4, 171:4, 171:8
William [1] - 2:15
WILLIAM [1] - 1:13
willing [2] - 81:12, 108:9
Willow [1] - 201:17
wind [2] - 81:19, 119:11
wind-driven [1] - 81:19
Window [5] - 16:21, 31:5, 50:25, 58:23, 58:24
window [154] - 11:23, 12:1, 12:6, 12:14, 14:7, 14:13, 14:20, 14:23, 14:25, 15:11, 15:20, 15:25, 17:2, 17:3, 17:10, 17:11, 17:12, 17:17, 18:22, 20:13, 20:18, 20:21, 21:5, 21:13, 22:15, 22:16, 25:4, 25:16, 26:12, 30:15, 30:19, 30:23, 31:8, 31:20, 31:21, 32:13, 33:9, 35:22, 38:4, 39:2, 39:5, 39:14, 39:25, 42:14, 43:6, 44:5, 44:10, 44:13, 44:25, 45:7, 45:25, 46:11, 46:16, 49:3, 49:10, 50:7, 50:24, 52:3, 52:12, 52:13, 52:14, 52:15, 53:3, 53:5, 53:25, 54:9, 54:10, 54:11, 54:21, 57:2, 57:22, 58:23, 59:22, 60:1, 60:5, 60:11, 61:17, 61:21, 63:21, 65:14, 65:19, 66:23, 68:12, 69:6, 69:21, 70:4, 71:7, 76:12, 80:13, 83:8, 85:16, 88:8, 88:19, 89:2, 89:11, 89:17, 90:10, 90:17, 90:20, 90:22, 91:20, 91:21, 91:22, 92:10, 93:8, 93:10, 93:15, 94:2, 94:9, 95:8, 96:7, 96:17, 96:21, 96:23, 97:5, 99:8, 99:20, 100:16, 100:18, 104:25, 106:7, 124:7, 147:13, 148:16, 148:24, 150:8, 153:1, 154:22, 155:6, 155:14, 155:16, 155:20, 155:22, 155:24, 155:25, 156:2, 156:4, 156:7, 156:10, 156:15, 157:1, 157:6, 160:17, 160:23, 161:1, 164:5, 164:8, 164:9, 167:1, 167:2
window's [1] - 100:20
windows [160] - 12:5, 12:23, 14:3, 17:6, 17:8, 17:15, 18:15, 18:17, 23:17, 23:22, 23:23, 23:25, 24:7, 26:20, 26:22, 28:21, 28:22, 29:19, 29:20, 29:21, 33:20, 39:18, 41:20, 42:10, 42:23, 43:24, 44:11, 45:9, 45:16, 45:21, 46:1, 46:8, 46:18, 46:20, 48:18, 48:21, 49:21, 51:4, 57:8, 57:20, 58:1, 58:3, 58:8, 58:14, 58:17, 58:21, 58:25, 59:1, 59:19, 59:20, 59:24, 60:2, 60:3, 60:6, 60:10, 60:12, 60:14, 60:15, 60:16, 60:17, 60:18, 60:25, 61:5, 61:6, 61:9, 61:14, 61:16, 64:17, 65:2, 66:2, 66:6, 67:10, 67:20, 68:11, 68:15, 68:19, 69:7, 70:12, 70:21, 75:5, 76:8, 77:4, 78:10, 79:16, 79:21, 80:5, 80:6, 80:9, 83:15, 85:15, 85:17, 85:19, 85:21, 86:4, 86:5, 86:8, 86:9, 86:13, 86:19, 86:21, 86:22, 87:2, 88:11, 88:20, 89:13, 89:21, 89:23, 92:5, 92:7, 94:8, 95:4, 99:22, 100:19, 101:3, 101:23, 101:24, 102:8, 102:10, 103:7, 104:6, 104:7, 104:8, 104:14, 121:10, 121:11, 121:14, 147:14, 147:15, 148:4, 148:5, 148:18, 149:7, 149:8, 149:9, 149:12, 149:14, 149:17, 151:11, 152:23, 153:5, 154:16, 156:18, 157:5, 157:24, 158:1, 158:3, 158:4, 158:5, 158:15,

158:17, 159:18, 159:22, 162:22, 162:23, 163:1, 164:6, 168:24, 212:4
winds [1] - 105:16
wine [1] - 212:11
wise [3] - 109:14, 133:7, 134:21
wish [4] - 3:10, 8:5, 48:14, 61:8
withdraw [4] - 178:17, 181:15, 181:19, 181:22
withdrawn [2] - 201:8, 201:10
withstanding [1] - 46:17
Wolfe [5] - 5:23, 112:14, 112:23, 117:4, 117:7
woman [1] - 14:2
wonder [1] - 110:17
wonderful [4] - 108:2, 182:13, 189:20, 212:14
wondering [5] - 30:18, 52:22, 96:4, 129:9, 165:22
wood [54] - 12:1, 12:5, 17:5, 17:8, 22:1, 23:23, 31:20, 37:17, 37:18, 38:5, 38:15, 42:14, 44:23, 45:13, 47:9, 48:20, 50:18, 54:19, 55:4, 58:15, 59:21, 59:24, 63:8, 63:13, 75:3, 75:9, 94:7, 94:11, 94:12, 94:19, 94:21, 97:12, 97:20, 113:9, 113:21, 114:14, 119:13, 130:20, 130:22, 131:5, 147:3, 147:10, 148:18, 148:19, 149:9, 149:17, 149:24, 151:20, 160:4, 161:24, 161:25
wood-out [1] - 17:8
wooden [4] - 57:17, 60:18, 85:17, 169:9
works [2] - 202:25, 203:19
Works [1] - 175:16
world [1] - 88:10
World [4] - 16:21, 31:6, 50:25, 58:23
World's [1] - 58:25
worried [1] - 54:18
worries [1] - 11:7
worse [2] - 42:16, 61:2
worth [1] - 137:8
worthy [2] - 186:5, 211:9
wrapping [1] - 104:22
write [1] - 186:18
written [3] - 100:11, 111:11, 118:15
wrote [1] - 119:19

Y

y'all [2] - 17:19, 57:11
y'all's [2] - 73:10
year [13] - 6:17, 94:8, 135:21, 153:4, 157:13, 166:5, 167:10, 187:25, 199:18, 200:5, 207:21, 210:17, 212:5
years [16] - 17:16, 24:6, 33:2, 46:7, 51:5, 52:25, 81:8, 82:8, 82:12, 89:14, 89:17, 89:21, 124:21, 185:15, 188:1, 209:15
yellow [1] - 172:4
yield [1] - 12:10

Z

Zoning [1] - 201:9
zoom [4] - 21:17, 21:20, 34:11, 173:20
zoomed [1] - 21:19

4. Public Hearing on Applications

Jacksonville
Historic Preservation
Commission

A. Call to Order

Jacksonville
Historic Preservation
Commission

B. Deferred Items

Jacksonville
Historic Preservation
Commission

C. Consent Agenda

Jacksonville
Historic Preservation
Commission

COA-25-32904

618 Stockton St

October 22, 2025

Report of the Jacksonville Planning and Development Department
Certificate of Appropriateness Application COA-25-32904

Addresses: 618 Stockton Street; RE# 065155-0000

Location: West side of Stockton Street, between Phyllis Street and Rosselle Street

Owner: Jonathan K. Dobson
Jacksonville Association of Firefighters, IAFF Local No. 122, Inc.
625 Stockton Street
Jacksonville, Florida 32204

Applicant: Cyndy Trimmer, Esq.
Driver, McAfee, Hawthorne and Diebenow, PLLC
1 Independent Drive, Suite 1200
Jacksonville, Florida 32202

Year Built:

Building 1A	*c.* 1946 (Building Permit Records)
Building 1B	*c.* 1928 (Building Permit Records)
Building 2	*c.* 1928 (Building Permit Records)
Building 3 (JFRD Union Hall)	*c.* 1950 (Property Appraiser)

Designation: Riverside Avondale; Contributing

Request: New Construction – Addition

Summary Scope of Work:

1. New construction of a one-story addition

Recommendation: **Approve with Conditions**

Conditions:

New Construction – Addition

1. The design, location, and materials used for the addition shall be developed in accordance with the site plan and elevation drawings dated **August 18, 2025**, or as otherwise approved by the Historic Preservation Section.
2. Prior to the final inspection of any building permit, the owner or their agent shall submit to the Historic Preservation Section an affidavit and any supplementary evidence that verifies compliance with all conditions of the COA final order.

PROJECT DESCRIPTION

COA-25-32904 seeks to construct a 1,400 square-foot, one-story addition on a nonresidential structure. Situated on the west side of Stockton Street between Phyllis Street and Rosselle Street, the subject property currently has two (2) standalone buildings:

- The first building, as viewed from the exterior, is a collection of attached buildings with interior wall partitions, otherwise known as Buildings 1A, 1B, and 2. Collectively speaking, the masonry building exemplifies the Mediterranean Revival architecture. The structure is characterized by its parapeted gable, curvilinear lines, symmetrical façade, arched doors, stucco exterior, and double-hung sash windows with Queen Anne lights. This building was previously approved for partial demolition and additions per **COA-24-30855**. As such, this building is not included within the current scope of work.
- The second building, the Jacksonville Fire and Rescue Department (JFRD) Union Hall, otherwise known as Building 3. The masonry building exemplifies the masonry vernacular architecture with its parapeted gable, brick veneer, symmetrical façade, single-hung sash windows, and arched windows with bar tracery.

According to the applicant, Building #3, built in 1950, seeks to use the proposed addition as a kitchen and storage facility for the JFRD union hall. The proposed one-story addition will consist of a shed roof with standing seam metal, awning-style windows, and brick veneer to match the existing structure.

STAFF SUMMARY AND ANALYSIS

Staff considered the applicable Design Guidelines for the Historic District and the Ordinance Code criteria found in Sections 307.106(k), 307.106(l), 307.106(m), 307.106(n), and 307.106(o). The following is Staff's analysis:

- Consistent with the Historic District Design Guidelines, the section on Additions, the proposed scope of work does not require any changes to significant historic fabric. If removed in the future, the removal of the additions would not cause any damage to or detract from the existing structure or the other historic structures. As such, the proposed scope of work is consistent with Sections 307.106(k)(1 and 2).
- The proposed work can be completed within a reasonable period of time, consistent with Section 307.106(k)(4).
- As designed, the proposed addition will be compatible and subordinate in height with the remaining and proposed buildings onsite. As such, the proposed work is consistent with Sections 307.106(k)(1) and 307.106(m)(1).
- The scale and massing of the proposed structure are consistent with other surrounding two-story residences. The relationship between it and adjoining structures, as depicted on the site plan dated August 18, 2025, are consistent with other nearby structures and have been conditioned to ensure compatibility. For these reasons, the development is consistent with Sections 307.106(m)(1, 3, and 6) and Standard 9.
- Section 307.106(m)(2) states, "The proportions and relationships between doors and windows shall be compatible with the architectural style and character of the landmark and with surrounding structures in a historic district." As designed, the new door and window openings will complement the existing historic openings in color, finish, and detail, which is consistent with Section 307.106(m)(2 and 8) and the Design Guidelines.
- As designed, the height and roof form of the proposed addition on the primary structure will be compatible with the existing height and roof forms. As such, the proposed work is consistent with Sections 307.106(k)(1) and 307.106(m)(1 and 4).
- The Historic District Design Guidelines for the Riverside Avondale Historic District references "New Construction" and lists Standards Two and Nine of the *Secretary of the Interior's Standards for Rehabilitation*. Standard Two refers to the relationship of new construction to adjacent buildings, landscape and streetscape features, and open spaces. The relationship of the proposed building to the surrounding context is described above. Standard Nine emphasizes that new construction shall not destroy historic materials and is differentiated from the old while being compatible in massing, size, scale, and architectural features in order to preserve the historical integrity of the property and its immediate surroundings. No historic fabric will be impacted since the new construction is infill of an underutilized vehicle use area. Also, the proposed addition is compatible with

the surrounding nonresidential structures. The proposed addition is differentiated from historic structures by the fenestration and materials used and is generally compatible with the massing and architectural features of adjacent properties.

For these reasons, it is the position of the Planning and Development Department that the proposed work under the stated conditions is consistent with:

- Section 307.106(k) General Standards: 1, 2 and 4
- Section 307.106(m) Guidelines on New Construction: 1-4, 6 and 8
- Historic Preservation Guidelines for the Riverside Avondale Historic District, "New Construction" and "Additions"

CODE CRITERIA AND DESIGN GUIDELINES

General Criteria

- 307.106(k)(1) - The effect of the proposed work on the landmark, landmark site or property within an historic district upon which such work is to be done;

- 307.106(k)(2) - The relationship between such work and other structures on the landmark site or other property in the historic district;

- 307.106(k)(4) - Whether the plans may be carried out by the applicant within a reasonable period of time.

New Construction

- 307.106(m)(1) - *Height.* The height of any proposed alteration or construction shall be compatible with the style and character of the landmark and with surrounding structures in an historic district.

- 307.106(m)(2) - *Proportions of windows and doors.* The proportions and relationships between doors and windows shall be compatible with the architectural style and character of the landmark and with surrounding structures in an historic district.

- 307.106(m)(3) - *Relationship of building masses, setbacks and spaces.* The relationship of a structure within an historic district to the open space between it and adjoining structures shall be compatible.

- 307.106(m)(4) - *Roof shape.* The design of the roof shall be compatible with the architectural style and character of the landmark and surrounding structures in an historic district.

- 307.106(m)(6) - *Scale.* The scale of the structure after alteration, construction, or partial demolition shall be compatible with its architectural style and character and with surrounding structures in an historic district.

- 307.106(m)(8) - *Architectural details.* Architectural details including materials and textures shall be treated so as to make a landmark compatible with its original architectural style and character and to preserve and enhance the architectural style or character of a landmark or historic district. The Commission will give recommendations as to appropriate colors for any landmark or historic district.

Design Guidelines, "New Construction" and "Additions"

- Secretary of the Interior's Standards for Rehabilitation (2):
  The historic character of a property shall be retained and preserved. The removal of historic materials or alteration of features and spaces that characterize a property shall be avoided.

- Secretary of the Interior's Standards for Rehabilitation (9):
  New additions, exterior alterations, or related new construction shall not destroy historic materials that characterize the property. The new work shall be differentiated from the old and shall be compatible with the massing, size, scale, and architectural features to protect the historic integrity of the property and its environment.

LOCATION MAP

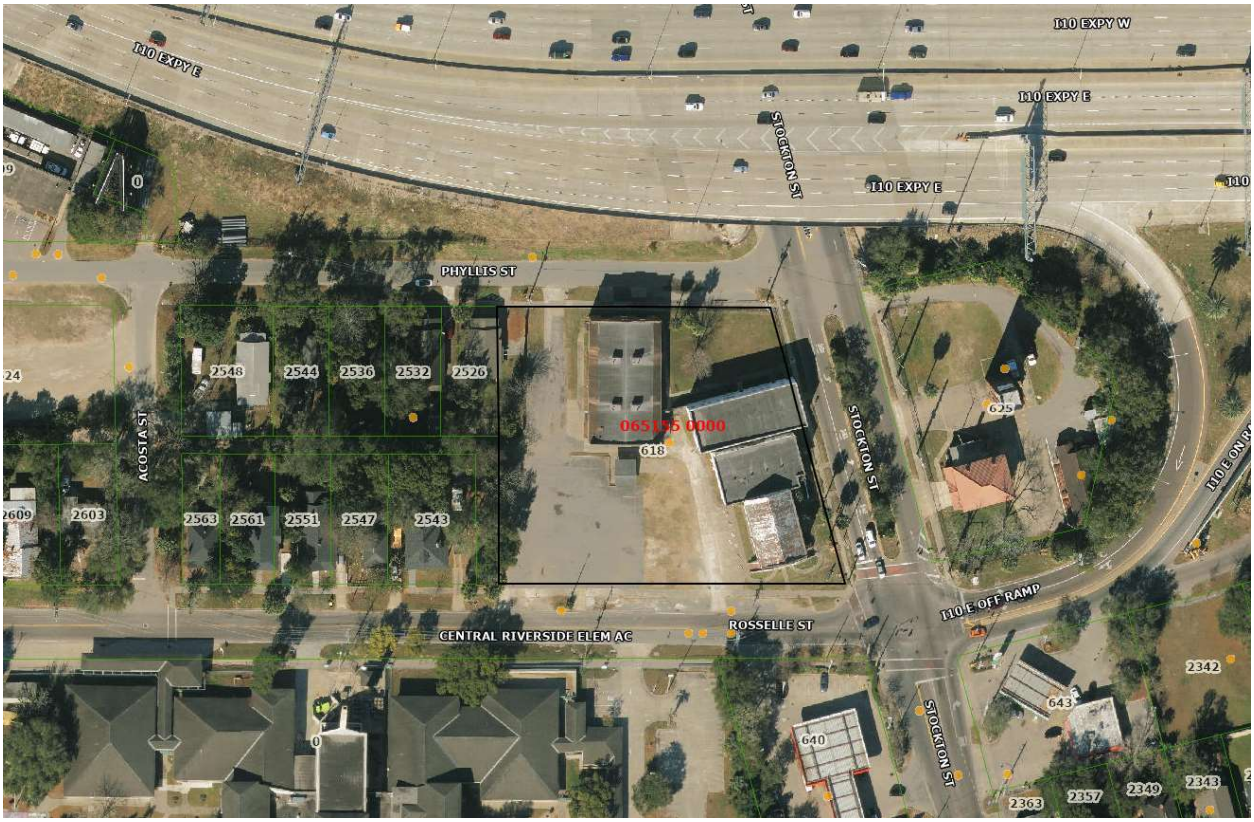

POSTED SIGN PHOTOGRAPH

VIEW OF THE SUBJECT BUILDING, FACING NORTH ALONG ROSSELLE STREET

PROPOSED SITE PLAN DATED AUGUST 18, 2025

PROPOSED ELEVATIONS DATED AUGUST 18, 2025

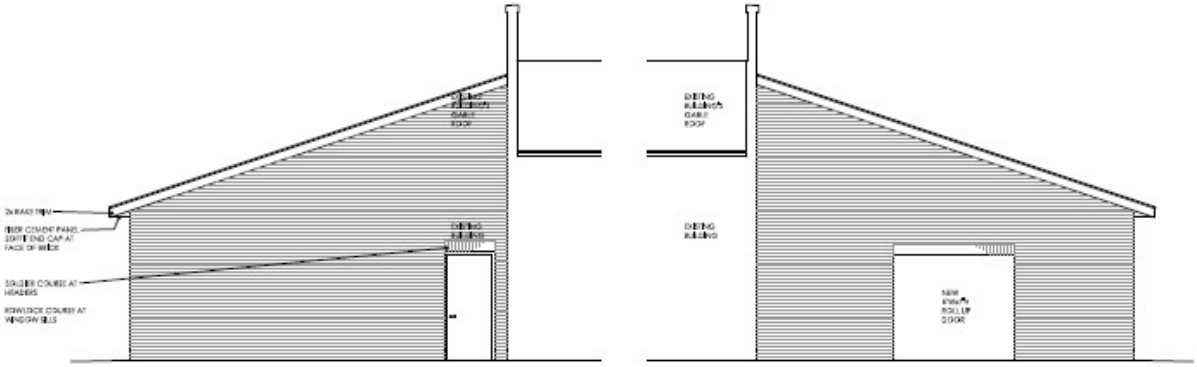

EAST-FACING EXTERIOR ELEVATION

WEST-FACING EXTERIOR ELEVATION

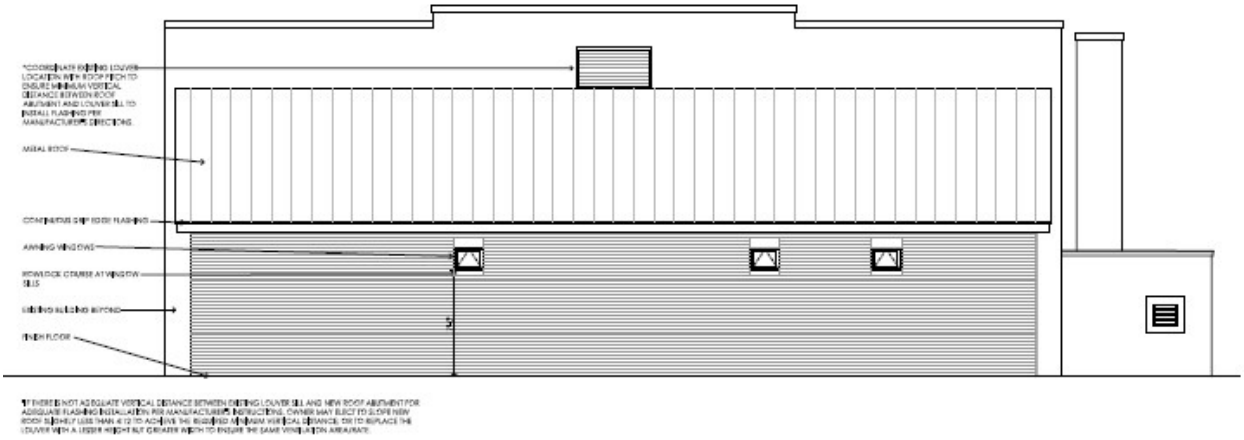

SOUTH-FACING EXTERIOR ELEVATION

PROPOSED FLOOR PLAN DATED AUGUST 18, 2025

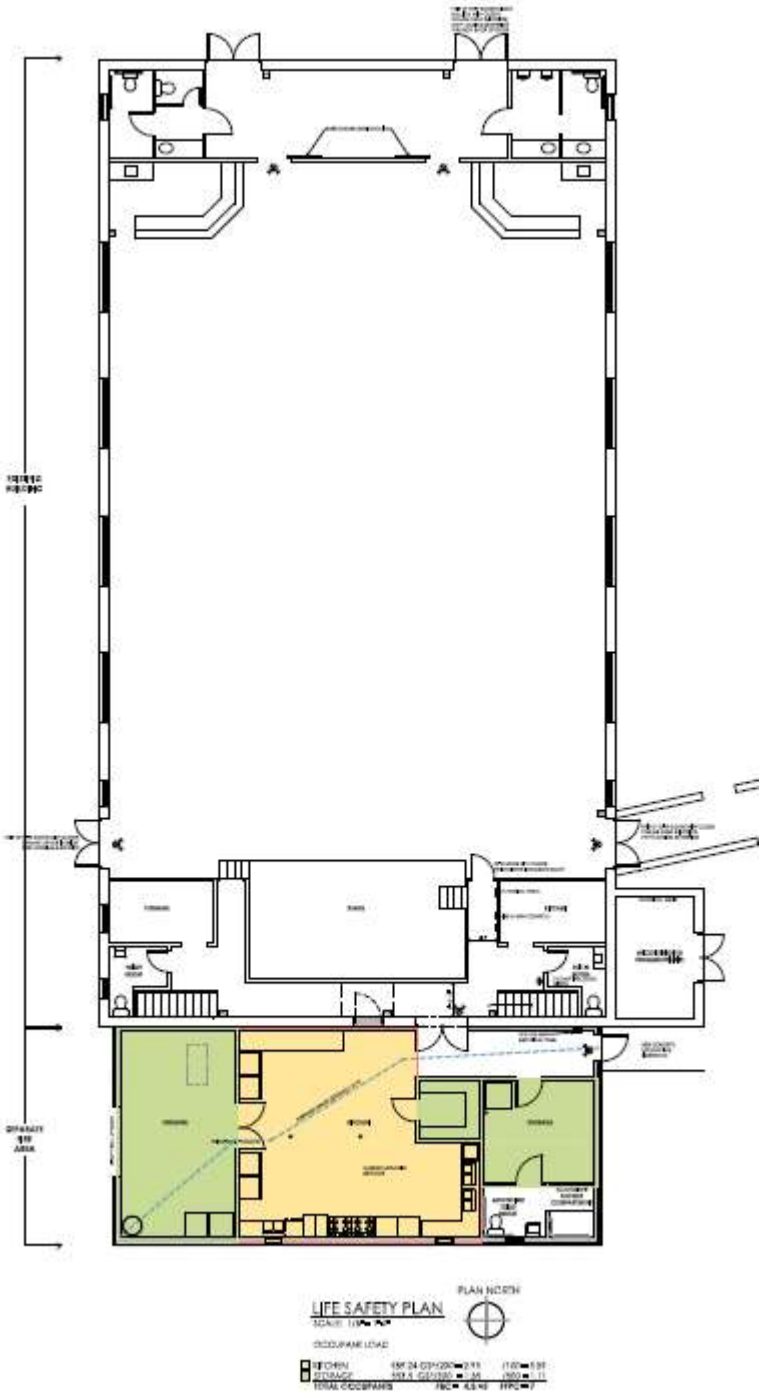

Application For Certificate Of Appropriateness

Application Info

Tracking #	32904	**Application Status**	FILED COMPLETE
Date Started	09/04/2025	**Date Submitted**	09/04/2025

Planning and Development Department Info

COA # N/A

Admin Review ☐

Admin Recommendation N/A

Admin Date Of Action N/A

Forwarded to JHPC ☐

JHPC Meeting Date N/A

Staff Recommendation N/A

JHPC Recommendation N/A

JHPC Date Of Action N/A

Admin Details
N/A

JHPC Details
N/A

General Information On Applicant

Last Name TRIMMER

First Name CYNDY

Middle Name

Company Name DRIVER, MCAFEE, HAWTHORNE AND DIEBENOW, PLLC

Mailing Address 1 INDEPENDENT DRIVE, SUITE 1200

City JACKSONVILLE

State FL

Zip Code 32202

Phone 904 807 0185

Fax 904

Email CKT@DRIVERMCAFEE.COM

General Information On Owner(s)

Agent represents ◉ **Owner** ○ **Contractor** ○ **Architect** ○ **Consultant** ○ **Other**

Last Name N/A

First Name N/A

Middle Name

Company/Trust Name JACKSONVILLE ASSOCIATION OF FIREFIGHTERS, IAFF LOCAL NO. 122, INC.

Mailing Address 625 STOCKTON ST

City JACKSONVILLE

State FL

Zip Code 32204

Phone 9043011269

Fax

Email CKT@DRIVERMCAFEE.COM

Description Of Property

Property Appraiser's RE #(s) (10 digit number with a space ###### ####)

Map	RE#

	065155 0000

Location Of Property

General Location
Riverside/Avondale Historic District

House #	Street Name, Type and Direction	Zip Code
618	STOCKTON ST	32204

Type Of Improvement

- [x] **Addition**
- [ ] **Driveway**
- [ ] **New Construction**
- [ ] **Accessory Structures**
- [ ] **Alteration**
- [ ] **Relocation**
- [ ] **Window Replacement**
- [ ] **Other/Minor Repairs**
- [ ] **Fencing**
- [ ] **Demolition**
- [ ] **Reroof**

Describe proposed work below. Note affected features and changes in design or materials. Be as specific, brief, and legible as possible.
(Example: reroof; replacing gray 3-tab shingles with black architectural shingles).

Proposed Work
JAOF IS SEEKING TO PUT A SMALL ADDITION ON THE BUILDING TO FACILITATE IMPROVEMENT TO THE KITCHEN.

Addition Information

Is this a violation? Check the box if it is. [ ]

If you have been working with a planner choose one from the list

Addition - Required Attachments For Complete Application

- [x] **Site Plan** - Existing/proposed site plan with addition identified. *(To scale bar scaled dimensional drawings needed. Directional arrows needed.)*
- [x] **Existing Elevations** - Existing elevations or photos of exising sides. *(To scale bar scaled dimensional drawings needed.)*
- [x] **Proposed Elevations** - Proposed front, sides and rear elevations. *(To scale bar scaled dimensional drawings needed.)*
- [x] **Overall Photos Of Site**
- [x] **Photos Of Addition Area**
- [x] **Description Of Any Demo**

Additional Documents Provided

Application Certification

For applications that can be approved administratively, there is no application fee.

For all applications that must go before the Historic Preservation Commission, a fee will be applied based on the type of work performed.

Application completeness review: All applications for Certificate of Appropriateness ("Application") will be reviewed for completeness by Planning and Development Department Staff. Any Application determined to be incomplete, will be returned to the applicant with comments detailing the deficiencies. No further action on the Application will take place until the application deficiencies are addressed. Once the Application is determined to be complete, Planning and Development Department Staff will prepare an invoice for the cost of the Application.

Payment deadline: The Invoice must be paid by the payment deadline in order to have the Application heard on the next scheduled Jacksonville Historic Preservation Commission (JHPC) regular meeting. The payment deadline is outlined on the City of Jacksonville's Planning and Development Department Website. Only sufficient applications will be invoiced. It is for the benefit of the applicant to supply staff with a sufficient applications in advance of the payment deadline. Due to the complexity and volume of Applications received by the Planning and Development Department, there is no guarantee that COA Applications submitted on the day of the payment deadline will be heard at the next regular meeting of the JHPC.

I, hereby, certify that I am the owner or the authorized agent of the owner(s) of the property described herein, that all answers to the questions in this application and all information contained in the material attached to and made a part of this application, are accurate and true to the best of my knowledge and belief. I also attest by my signature that all required information for this application is completed and duly attached in the prescribed order. Furthermore, if the package is found to be lacking the above requirements, I understand that the application will be returned for correct information.

☑ I UNDERSTAND THE ABOVE DISCLAIMER REGARDING APPLICATION REVIEW. AGREED TO AND SUBMITTED.

JACKSONVILLE ASSOC OF FIREFIGHTERS IAFF LOCAL
625 STOCKTON ST
JACKSONVILLE, FL 32204-3021

Primary Site Address
618 STOCKTON ST
Jacksonville FL 32204-

Official Record Book/Page
11853-00164

Tile #
6422

618 STOCKTON ST

Property Detail

RE #	065155-0000
Tax District	USD1
Property Use	7700 Club/Lodge/Union Hall
# of Buildings	3
Legal Desc.	For full legal description see Land & Legal section below
Subdivision	01064 RIVERSIDE R. I. COS ADDN
Total Area	68192
Characteristics	Historic Designation

The sale of this property may result in higher property taxes. For more information go to Save Our Homes and our Property Tax Estimator . 'In Progress' property values, exemptions and other supporting information on this page are part of the working tax roll and are subject to change. Certified values listed in the Value Summary are those certified in October, but may include any official changes made after certification Learn how the Property Appraiser's Office values property.

Value Summary

Value Description	2024 Certified	2025 In Progress
Value Method	CAMA	CAMA
Total Building Value	$818,557.00	$817,061.00
Extra Feature Value	$33,326.00	$32,698.00
Land Value (Market)	$284,709.00	$284,709.00
Land Value (Agric.)	$0.00	$0.00
Just (Market) Value	$1,136,592.00	$1,134,468.00
Assessed Value	$1,127,986.00	$1,134,468.00
Cap Diff/Portability Amt	$8,606.00 / $0.00	$0.00 / $0.00
Exemptions	$1,127,986.00	See below
Taxable Value	$0.00	See below

Taxable Values and Exemptions – In Progress

If there are no exemptions applicable to a taxing authority, the Taxable Value is the same as the Assessed Value listed above in the Value Summary box.

County/Municipal Taxable Value

Assessed Value	$1,134,468.00
Labor Org Property (505)	- $1,134,468.00
Taxable Value	**$0.00**

SJRWMD/FIND Taxable Value

Assessed Value	$1,134,468.00
Labor Org Property (505)	- $1,134,468.00
Taxable Value	**$0.00**

`School Taxable Value

Assessed Value	$1,134,468.00
Labor Org Property (505)	- $1,134,468.00
Taxable Value	**$0.00**

Sales History

Book/Page	Sale Date	Sale Price	Deed Instrument Type Code	Qualified/Unqualified	Vacant/Improved
11853-00164	5/20/2004	$100.00	QC - Quit Claim	Unqualified	Improved
11853-00166	5/21/2004	$100.00	WD - Warranty Deed	Unqualified	Improved
11853-00168	5/18/2004	$500,000.00	WD - Warranty Deed	Qualified	Improved

Extra Features

LN	Feature Code	Feature Description	Bldg.	Length	Width	Total Units	Value
1	PVAC1	Paving Asphalt	1	0	0	16,281.00	$15,044.00
1	WMCC1	Wall Masonry/Concrt	2	0	0	141.00	$419.00
1	FPMC6	Fireplace Masonry	3	0	0	1.00	$884.00
2	FWIC1	Fence Wrought Iron	2	0	0	174.00	$10,621.00
2	PVCC1	Paving Concrete	1	0	0	1,992.00	$3,657.00
3	CPWC2	Carport Wood	1	24	18	432.00	$1,374.00
4	FCBC1	Fence Chain Barbed	1	0	0	123.00	$699.00

Land & Legal

Land

LN	Code	Use Description	Zoning Assessment	Front	Depth	Category	Land Units	Land Type	Land Value
1	0101	RES MD 8-19 UNITS PER AC	RMD-B	150.00	258.00	Common	150.00	Front Footage	$110,700.00
2	1000	COMMERCIAL	CCG-1	0.00	0.00	Common	31,638.00	Square Footage	$174,009.00

Legal

LN	Legal Description
1	5-47 22-2S-26E 1.614
2	R I CO S ADDN TO RIVERSIDE
3	LOTS 1 TO 7,20,21,22
4	PT CL ALLEY(EX EXP) BLK 9

Buildings

Building 1

Building 1 Site Address
618 STOCKTON ST Unit
Jacksonville FL 32204-

Building Type	7701 - CLUB/HALL
Year Built	1937
Building Value	$364,328.00

Type	Gross Area	Heated Area	Effective Area

Element	Code	Detail
Exterior Wall	17	17 C.B. Stucco
Roof Struct	4	4 Wood Truss
Roofing Cover	4	4 Built Up/T&G
Interior Wall	3	3 Plastered
Int Flooring	9	9 Pine/Soft Wood
Int Flooring	11	11 Cer Clay Tile
Heating Fuel	4	4 Electric
Heating Type	4	4 Forced-Ducted

Base Area	6018	6018	6018
Finished upper story 1	6018	6018	6018
Finished Encl Porch	20	0	16
Finished Encl Porch	25	0	20
Finished Encl Porch	25	0	20
Finished Encl Porch	20	0	16
Stoop	119	0	12
Base Area	21	21	21
Finished upper story 1	49	49	49
Base Area	49	49	49
Stoop	225	0	22
Base Area	99	99	99
Stoop	225	0	22
Total	12913	12254	12382

Air Cond	3	3 Central
Ceiling Wall Finish	4	4 NS Ceil Min Wall
Comm Htg & AC	1	1 Not Zoned
Comm Frame	3	3 C-Masonry

Element	Code	Detail
Stories	2.000	
Restrooms	4.000	
Baths	12.000	
Rooms / Units	1.000	
Avg Story Height	13.000	

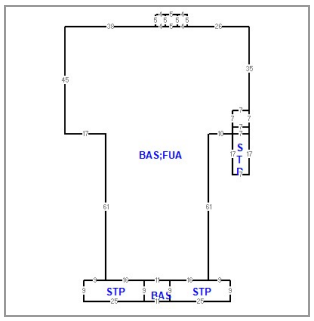

2025 Notice of Proposed Property Taxes Notice (TRIM Notice)

Taxing District	Assessed Value	Exemptions	Taxable Value	Last Year	Proposed	Rolled-back
County	$1,134,468.00	$1,134,468.00	$0.00	$0.00	$0.00	$0.00
Urban Service Dist1	$1,134,468.00	$1,134,468.00	$0.00	$0.00	$0.00	$0.00
Public Schools: By State Law	$1,134,468.00	$1,134,468.00	$0.00	$0.00	$0.00	$0.00
By Local Board	$1,134,468.00	$1,134,468.00	$0.00	$0.00	$0.00	$0.00
School Board Voted	$1,134,468.00	$1,134,468.00	$0.00	$0.00	$0.00	$0.00
FL Inland Navigation Dist.	$1,134,468.00	$1,134,468.00	$0.00	$0.00	$0.00	$0.00
Water Mgmt Dist. SJRWMD	$1,134,468.00	$1,134,468.00	$0.00	$0.00	$0.00	$0.00
Urb Ser Dist1 Voted	$1,134,468.00	$1,134,468.00	$0.00	$0.00	$0.00	$0.00
			Totals	$0.00	$0.00	$0.00

Description	Just Value	Assessed Value	Exemptions	Taxable Value
Last Year	$1,136,592.00	$1,127,986.00	$1,127,986.00	$0.00
Current Year	$1,134,468.00	$1,134,468.00	$1,134,468.00	$0.00

2025 TRIM Property Record Card (PRC)

This PRC reflects property details and values at the time of the original mailing of the Notices of Proposed Property Taxes (TRIM Notices) in August.

Property Record Card (PRC)

The PRC accessed below reflects property details and values at the time of Tax Roll Certification in October of the year listed.

2024

2023

2022

2021

2020

2019

2018

2017

2016

2015

2014

• To obtain a historic Property Record Card (PRC) from the Property Appraiser's Office, submit your request here:

More Information

ontact Us | Parcel Tax Record | GIS Map | Map this property on Google Maps | City Fees Record

THIS INSTRUMENT PREPARED BY:
Lewis & Bernard, P.A.
Lawrence J. Bernard
1403-20 Dunn Avenue
Jacksonville, FL 32218

RECORD AND RETURN TO:
Lewis & Bernard, P.A.
1403-20 Dunn Avenue
Jacksonville, FL 32218

RE PARCEL ID #: **065155-0000**

Book 11853 Page 164

Doc# 2004182448
Book: 11853
Pages: 164 - 165
Filed & Recorded
06/08/2004 09:12:37 AM
JIM FULLER
CLERK CIRCUIT COURT
DUVAL COUNTY

RECORDING	$	9.00
TRUST FUND	$	1.50
DEED DOC STAMP	$	0.70
REC ADDITIONAL	$	8.00

QUIT - CLAIM DEED

THIS QUIT - CLAIM DEED made this 20th **day of May, 2004** by **Florida Baptist Convention, Inc., a Florida non profit corporation**, hereinafter referred to as Grantor, whether one or more, and whose address is 1230 Hendricks Ave, Jax, FL, to **Jacksonville Association of Firefighters, IAFF Local No. 122, Inc., a Florida corporation**, hereinafter referred to as Grantee, whether one or more, and whose address is **618 Stockton Street, Jacksonville, FL 32204**

(Wherever used herein the term "grantor" and "grantee" include all the parties to this instrument and the heirs, legal representatives and assigns of individuals, and the successors and assigns of corporations.)

WITNESSETH:

THAT Grantor, for and in consideration of the sum of Ten and NO/100 Dollars and other valuable considerations, in hand paid by Grantee, the receipt whereof is hereby acknowledged, does remise, release and quit-claim unto Grantee the following described land situate, lying and being in the County of **Duval**, State of **Florida** to wit:

Lot 20, Block 9, Riverside Improvement Company's Addition to Riverside, according to the plat thereof as recorded in Plat Book 5, page 47 of the current public records of Duval County, Florida.

THE PURPOSE OF THIS DEED IS TO RELINQUISH ANY AND ALL INTEREST OF THE FLORIDA BAPTIST CONVENTION CHURCH SITE FUND GRANTED BY VIRTUE OF "RESTRICTIVE COVENANT WITH VESTED INTEREST" RECORDED IN OFFICIAL RECORDS BOOK 10544, PAGE 1522 OF THE CURRENT PUBLIC RECORDS OF DUVAL COUNTY, FLORIDA.

SUBJECT TO taxes accruing subsequent to **December 31, 2003**.
SUBJECT TO covenants, restrictions and easements of record, if any; however, this reference shall not operate to reimpose same.
TO HAVE AND TO HOLD the same together with all and singular the tenements, hereditaments and appurtenances thereunto belonging or in anywise appertaining and all the estate, right, title, interest, lien, equity and claim whatsoever of the Grantor, either in law or in equity, to the only proper use, benefit and behoof of the Grantee.

(2)

IN WITNESS WHEREOF, Grantor has signed and sealed these presents the day and year first above written.

Signed, sealed and delivered in our presence:

Witness Signature

R. LUTHER BEAUCHAMP
Witness Name Printed

Witness Signature

Patricia A. Vansant
Witness Name Printed

Florida Baptist Convention, Inc.,
a Florida non profit corporation

By: Gary L. Crawford, President

By: T.G. John Sullivan, Executive Director/Treasurer

STATE OF **Florida**
COUNTY OF **Duval**

The foregoing instrument was acknowledged before me this 20th day of May, 2004 by Gary L. Crawford, President and T.G. John Sullivan, Executive Director/Treasurer of the Florida Baptist Convention, Inc., a Florida corporation. He/She/They have produced Personally known as identification.

Notary Public, County and State Aforesaid

Patricia A. Vansant
Notary Printed Signature

My commission expires: Nov. 18 2007

PATRICIA A. VANSANT
Notary Public, State of Florida
My comm. expires Nov. 18, 2007
Comm. No. DD 238687

City of Jacksonville
Planning & Development Department
214 N. Hogan Street, Suite 300
Jacksonville, Florida 32202

AFFIDAVIT OF PROPERTY OWNERSHIP AND DESIGNATION OF AGENT
Corporation/Partnership/Trust/Other Entity

JACKSONVILLE ASSOCIATION OF FIREFIGHTERS, IAFF LOCAL NO. 122, INC.
Owner Name

618 Stockton Street, Jacksonville, Florida 32204
Address(es) for Subject Property

065155 0000
Real Estate Parcel Number(s) for Subject Property

Driver, McAfee, Hawthorne & Diebenow, PLLC
Appointed or Authorized Agent(s)

Exception, administrative deviation, certificate of appropriateness
Type of Request(s)/Application(s)

STATE OF FLORIDA
COUNTY OF Duval

BEFORE ME, the undersigned authority, this day personally appeared Johnathan K. Dobson, hereinafter also referred to as "Affiant", who being by me first duly sworn, under oath, deposes and states as follows:

1. Affiant is the Director/President of **JACKSONVILLE ASSOCIATION OF FIREFIGHTERS, IAFF LOCAL NO. 122, INC.**, a Florida Not For Profit Corporation (the "Entity") that is the owner and record title holder of the property described above and more specifically in the attached legal description (the "Subject Property"), which property is the subject of the above-noted request(s)/application(s) being made to the City of Jacksonville.*

2. Affiant affirms that he/she is authorized to execute this Affidavit on behalf of the aforesaid Entity.

3. That I, the undersigned, as an authorized representative of the Entity, have appointed, and do hereby appoint, the above-noted person(s)/entity as agent(s) to act on behalf of said Entity in connection with the above-referenced request(s)/application(s). Said agent(s) is/are authorized and empowered to act as agent to file application(s) for land use amendment(s), rezoning(s), and/or other development permits for the Subject Property and, in connection with such authorization, to file such applications, papers, documents, requests and other matters necessary to effectuate and pursue such requested change(s) and/or development permit(s) and including appearances before all City boards, commissions or committees on behalf of the application(s). In authorizing the agent(s) named herein to represent the Entity, I attest that the application(s) is/are made in good faith.

4. Affiant further acknowledges that any change in ownership of the Subject Property and/or the designated agent(s) that occur prior to the date of final public hearing or City Council action on the application(s) associated herewith shall require that a new Affidavit of Property Ownership and Designation of Agent be submitted to the City of Jacksonville Planning and Development Department to reflect any such changes.

5. I acknowledge and affirm that I am familiar with the nature of an oath and with the penalties provided by the laws of the State of Florida for falsely swearing to statements under oath. Under penalty of perjury, I hereby declare that I have examined this Affidavit and to the best of my knowledge and belief, it is true, correct and complete.

FURTHER AFFIANT SAYETH NAUGHT.

JKDL
_____
Signature, **Johnathan K. Dobson**

*** Affiant shall provide documentation illustrating that Affiant is an authorized representative of the entity-owner of the Subject Property. This may be shown through a corporate resolution, power of attorney, printout from Sunbiz.org, trust agreement, etc.**

NOTARIAL CERTIFICATE

Sworn to and subscribed before me by means of ☑ physical presence or ☐ online notarization, this 3rd day of SEPTEMBER, 2025, by JONATHAN K DOBSON, as PRESIDENT for JACKSONVILLE ASSOCIATION OF FIREFIGHTERS, who is ☑ personally known to me or ☐ has produced identification and who took an oath.

Type of identification produced _____.

[NOTARY SEAL]

CYNTHIA TRIMMER
Commission # HH 176079
Expires September 19, 2025
Bonded Thru Budget Notary Services

_____
Notary Public Signature

CYNTHIA TRIMMER
Printed/Typed Name – Notary Public

My commission expires: _____

NOTE: APPLICATIONS SUBMITTED WITH AN INCORRECTLY COMPLETED, INCOMPLETE, OR ALTERED AFFIDAVIT OF PROPERTY OWNERSHIP AND DESIGNATION OF AGENT FORM(S) WILL NOT BE PROCESSED.

PREVIOUS VERSIONS OF THIS FORM ARE OBSOLETE

Sunbiz.org DIVISION of CORPORATIONS
an official State of Florida website

Detail by Entity Name

Florida Not For Profit Corporation
JACKSONVILLE ASSOCIATION OF FIREFIGHTERS, IAFF LOCAL NO. 122, INC.

Filing Information

Document Number	N04000004154
FEI/EIN Number	59-1296487
Date Filed	04/22/2004
State	FL
Status	ACTIVE

Principal Address

625 STOCKTON ST
JACKSONVILLE, FL 32204

Mailing Address

625 STOCKTON ST
JACKSONVILLE, FL 32204

Registered Agent Name & Address

DOBSON, JONATHAN K
625 STOCKTON ST
JACKSONVILLE, FL 32204

Name Changed: 02/05/2024

Officer/Director Detail

Name & Address

Title DP

DOBSON, JONATHAN K
625 STOCKTON ST
JACKSONVILLE, FL 32204

Title DST

BALDWIN, CHARLES L
625 STOCKTON ST
JACKSONVILLE, FL 32204

Annual Reports

Report Year	Filed Date
2022	01/28/2022
2023	01/18/2023
2024	02/05/2024

Document Images

02/05/2024 -- ANNUAL REPORT	View image in PDF format
01/18/2023 -- ANNUAL REPORT	View image in PDF format
01/28/2022 -- ANNUAL REPORT	View image in PDF format
02/04/2021 -- ANNUAL REPORT	View image in PDF format
01/15/2020 -- ANNUAL REPORT	View image in PDF format
04/11/2019 -- ANNUAL REPORT	View image in PDF format
02/22/2018 -- ANNUAL REPORT	View image in PDF format
03/14/2017 -- ANNUAL REPORT	View image in PDF format
02/25/2016 -- ANNUAL REPORT	View image in PDF format
03/05/2015 -- ANNUAL REPORT	View image in PDF format
04/04/2014 -- ANNUAL REPORT	View image in PDF format
04/22/2013 -- ANNUAL REPORT	View image in PDF format
04/11/2012 -- ANNUAL REPORT	View image in PDF format
04/04/2011 -- ANNUAL REPORT	View image in PDF format
02/02/2010 -- ANNUAL REPORT	View image in PDF format
02/19/2009 -- ANNUAL REPORT	View image in PDF format
03/24/2008 -- ANNUAL REPORT	View image in PDF format
02/26/2007 -- ANNUAL REPORT	View image in PDF format
04/28/2006 -- ANNUAL REPORT	View image in PDF format
02/07/2005 -- ANNUAL REPORT	View image in PDF format
04/22/2004 -- Domestic Non-Profit	View image in PDF format

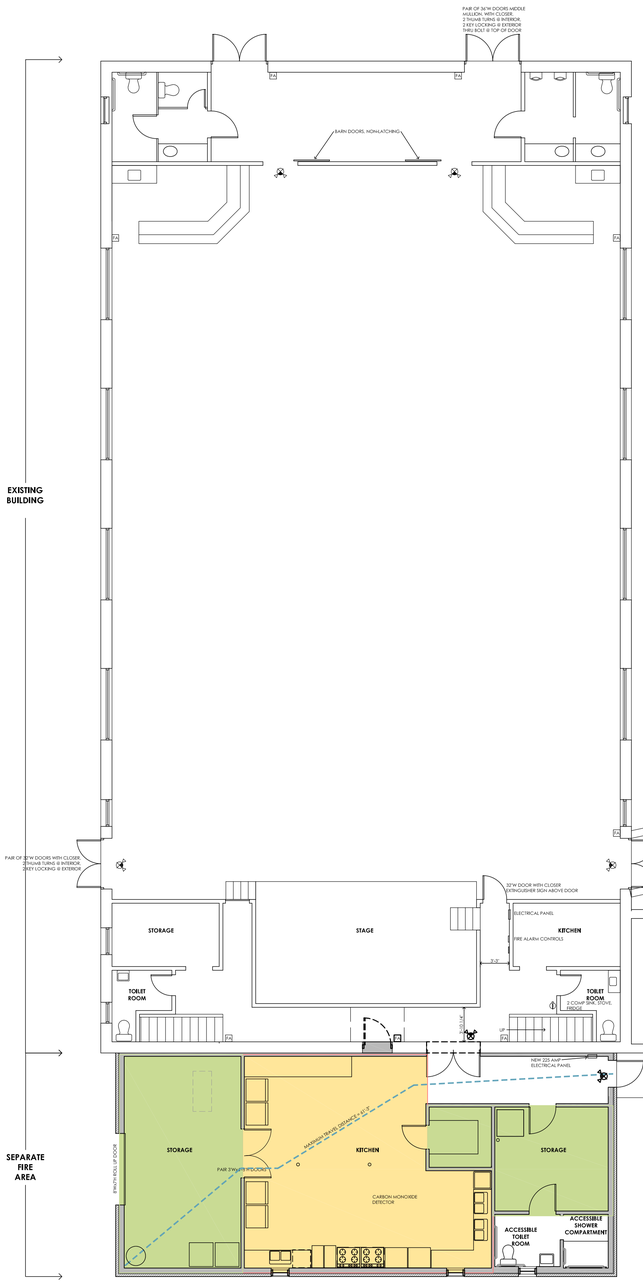

LIFE SAFETY PLAN
SCALE: 1/8" = 1'-0"

OCCUPANT LOAD

KITCHEN	589.24 GSF/200 = 2.95	/100 = 5.89	
STORAGE	553.5 GSF/300 = 1.85	/500 = 1.11	
TOTAL OCCUPANTS	**FBC = 4.8 ≈5**	**FFPC = 7**	

SITE PLAN
SCALE: 1/32" = 1'-0"

SITE DEVELOPMENT PLAN BY OTHERS, FOR REFERENCE TO THE SCOPE OF WORK DESCRIBED HEREIN ONLY.

APPLICABLE CODES
FLORIDA BUILDING CODE, 8TH EDITION (2023) - BUILDING
FLORIDA BUILDING CODE, 8TH EDITION (2023) - EXISTING BUILDINGS
FLORIDA BUILDING CODE, 8TH EDITION (2023) - PLUMBING
FLORIDA BUILDING CODE, 8TH EDITION (2023) - MECHANICAL
FLORIDA BUILDING CODE, 8TH EDITION (2023) - ENERGY CONSERVATION
FLORIDA BUILDING CODE, 8TH EDITION (2023) - ACCESSIBILITY
FLORIDA FIRE PREVENTION CODE, 8TH EDITION (2023)
NFPA 70 - 2020 NATIONAL ELECTRIC CODE

PROJECT CODE SUMMARY
PROJECT IS A 1400 SQUARE FOOT ADDITION TO AN EXISTING 6579 SQUARE FOOT 1 STORY BUILDING. THE EXISTING BUILDING IS ASSUMED TO BE COMPRISED OF A CONCRETE SLAB FLOOR; MULTI-WYTHE BRICK EXTERIOR WALLS; AND WOOD-FRAME ROOF. THE ADDITION WILL BE MADE AS A SEPARATE FIRE AREA FROM THE EXISTING BUILDING. THE PROJECT IS CONSIDERED A REHABILITATION OF A KITCHEN BEING REMOVED ELSEWHERE ON THE PROPERTY SLATED FOR DEMOLITION.

CONSTRUCTION TYPE **TYPE 3B**
FIRE PROTECTION **EXISTING BUILDING HAS A FIRE ALARM SYSTEM BUT IS NOT SPRINKLERED**

OCCUPANCY CLASSIFICATION ADDITION: FBC UTILITY & MISCELLANEOUS; FFPC REHABILITATION (6)ADDITION
EXISTING: FBC A2 ASSEMBLY; FFPC ASSEMBLY OVER 300

OCCUPANT LOAD FBC 5 FFPC 7 (SEE NEXT PAGE)

FIRE RESISTANCE OF FIRE BARRIER SEPARATING EXISTING FROM NEW IS REQUIRED TO BE 2 HOUR RATED (FBC 707.3.10 FOR ASSEMBLY)
EXISTING BUILDING EXTERIOR/ADJOINING WALL IS ASSUMED TO BE COMPRISED OF 2 WYTHES OF SOLID BRICK.
PER FBC TABLE 721.1(2) 1. MATERIAL: BRICK OF CLAY OR SHALE; ITEM NUMBER 1-1, 2 HOURS IS ACHIEVE WITH 3.8" THICKNESS, WHICH 2 SOLID STANDARD BRICKS SHOULD EXCEED. CONTRACTOR SHALL NOTIFY AOR IF EXISTING WALL ASSEMBLY, MATERIALS AND/OR THICKNESS IS FOUND TO BE DIFFERENT THAN ASSUMED.

DOOR(S) IN THIS 2 HOUR WALL ARE REQUIRED TO BE 1 1/2 HOUR RATED

THERE ARE NO PLUMBING FIXTURE REQUIREMENTS FOR A UTILITY/MISCELLANEOUS OCCUPANCY CLASSIFICATION

MINIMUM NUMBER OF EXITS 1 IF MAXIMUM COMMON PATH OF TRAVEL IS 100' OR LESS
CORRIDOR WIDTH MINIMUM 44" WHERE SERVING OVER 50 OCCUPANTS (EXISTING ASSEMBLY)
36" WHERE SERVING 50 OR FEWER OCCUPANTS (NEW UTILITY)
CORRIDOR FIRE RATING 1 (EXISTING ASSEMBLY)
0 (NEW UTILITY)
MAXIMUM TRAVEL DISTANCE TO EXIT 200' (EXISTING ASSEMBLY)
300' (UTILITY)
DEAD END CORRIDOR MAXIMUM 20'

ANY REQUIRED STRUCTURAL, MECHANICAL, PLUMBING, ELECTRICAL AND FIRE PROTECTION DESIGN AND DRAWINGS ARE BY OTHERS.

SITE SHALL HAVE ACCESSIBLE PARKING AND ROUTE TO ENTRANCES PER DEVELOPMENT/CONSTRUCTION BY OTHERS. EXISTING BUILDING HAS ACCESSIBLE ROUTES. SOME EXISTING BATHROOMS, DOORS WIDTHS AND DOOR HANDLES ARE NOT ACCESSIBILITY COMPLIANT. NEW WORK SHALL BE 100% ACCESSIBILITY-COMPLIANT.
PER FLORIDA BUILDING CODE, ACCESSIBILITY, ONLY AREAS BEING ALTERED MUST COMPLY WITH CURRENT CODES IF IT CAN BE REASONED THAT THEY MET ACCESSIBILITY COMPLIANCE AT THE LAST TIME OF PERMITTING; THERE IS NOT CHANGE OF OCCUPANCY CLASSIFICATION OR SUBCLASSIFICATION; AND THE PROJECT COST DOES NOT EXCEED 50% OF MARKET VALUE. ADA (FEDERAL) COMPLIANCE REQUIRES REMOVAL OF ACCESSIBILITY BARRIERS WHERE FEASIBLE. OWNER SHALL DETERMINE WHAT IS FEASIBLE AND INCLUDE IMPROVEMENTS PER FBC-ACCESSIBILITY 202.4.2 PRIORITIZATION.

NFPA 101 12.2.5.10.2 AISLES SERVING SEATING AT TABLES; WIDTH OF AISLES SHALL BE 44" MINIMUM WHERE SERVING AN OCCUPANT LOAD OVER 50 AND 36" MINIMUM WHERE OCCUPANT LOAD IS 50 OR FEWER.

NEW KITCHEN IS A PRIVATE ORGANIZATION NOT FEEDING THE PUBLIC AND THEREFORE NOT SUBJECT TO FOOD ESTABLISHMENT MINIMUM CONSTRUCTION STANDARDS AS SET FORTH BY THE FLORIDA DEPARTMENT OF AGRICULTURE AND CONSUMER SERVICES.

Commercial Kitchen Addition
for
Firefighters IAFF Local Union Hall

618 Stockton Street
Jacksonville, Florida
32204
Duval County

Jurisdiction of
City of Jacksonville

MAC ARCHITECT
Mary Ann Chambliss, Architect
2003 Woodmere Circle
Jacksonville, Florida
32210
904.428.9372
admin@mac-architect.com
AR 17019

All reports, plans, specifications, computer files, field data, notes and other documents and instruments of service prepared by the architect shall remain the property of the architect. The architect shall retain all common law, statuary and other reserved rights, including the copyright. Mary Ann Chambliss Architect

STATE OF FLORIDA
MARY ANN CHAMBLISS
AR0017019
REGISTERED ARCHITECT

This item has been electronically signed and sealed by Mary Ann Chambliss, Registered Architect on **8 18 2025** using a digital signature. Printed copies of this document are not considered signed and sealed and the signature must be verified on any electronic copies. FAC 61G15-23.005(d) & 61G1-16.005.

Issued:

8 18 2025 FOR PERMITTING

CODE SUMMARY & LIFE SAFETY PLAN

LS1

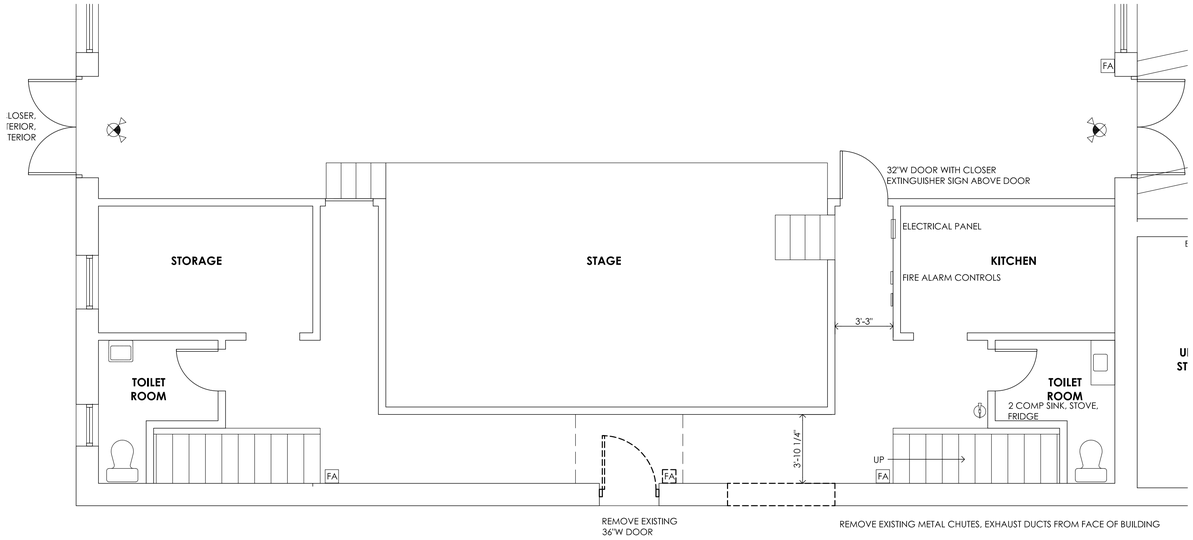

DEMOLITION PLAN
SCALE: 1/4" = 1'-0"

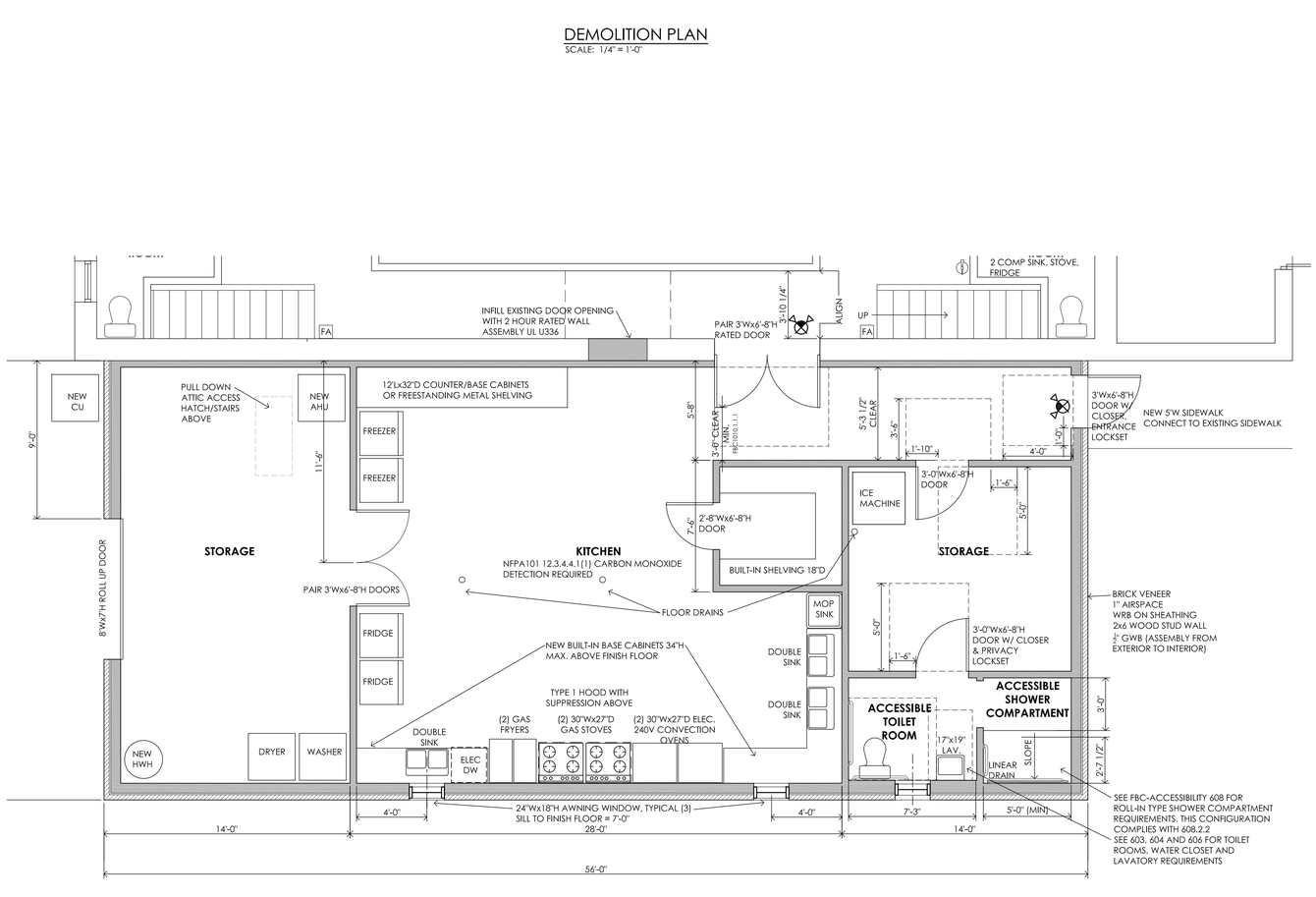

RENOVATION PLAN
SCALE: 1/4" = 1'-0"

1. NEW WINDOWS AND DOORS SHALL HAVE FLORIDA PRODUCT APPROVAL NUMBERS AND SHALL MEET FBC -ENERGY CONSERVATION TABLE C402.4: MAXIMUM U FACTOR OF OPERABLE FENESTRATION = .65; OF FIXED FENESTRATION = .5; OF ENTRANCE DOORS = .83 AND SHGC OF .25.
2. STORAGE ROOM WITH ROLL UP DOOR WILL NOT BE USED FOR VEHICLES. IF VEHICLE USE IS DESIRED A CARBON MONOXIED DETECTION SYSTEM MUST BE INSTALLED.
3. 216"Lx80"H STAINLESS STEEL BACKSPLACE AT BACK WALL OF STOVES.
4. BACKER BOARDS FOR WALL TILE IN SHOWER AREAS SHALL BE AS LISTED IN FBC-R TABLE R702.4
5. REMOVE MANUAL THRU BOLTS AT EXISTING EXIT DOORS.
6. REMOVE MEANS OF EGRESS DOOR LATCHING/LOCKING SUCH THAT IT REQUIRES ONLY 1 RELEASING MOTION THAT DOES NOT REQUIRE PINCHING, TWISTING, NEED FOR A KEY, TOOL OR SPECIAL KNOWLEDGE IN ORDER TO OPERATE THE DOOR.
7. NEW WINDOWS SHALL MEET FBC-ENERGY CONSERVATION.U FACTOR OF .65 AND SOLAR HEAT GAIN COEFFICIENT OF .25 MAXIMUM.
8. NEW EXTERIOR DOORS SHALL HAVE A U FACTOR OF .83 AND SHGC OF .25 MAXIMUM.
9. ADDITION SHALL MEET PRESCRIPTIVE AIR BARRIER/ENVELOPE CONSTRUCTION IN C402.5 OR BE TESTED IN ACCORDANCE WITH C402.5.1.2.3.
10. NEW INTERIOR AND EXTERIOR DOORS SHALL BE COMMERCIAL GRADE AND MATCH MATERIAL AND FINISH(ES) OF EXISTING BUILDING.

Commercial Kitchen Addition

for

Firefighters IAFF Local Union Hall

618 Stockton Street
Jacksonville, Florida
32204
Duval County

Jurisdiction of
City of Jacksonville

MAC ARCHITECT
Mary Ann Chambliss, Architect
2003 Woodmere Circle
Jacksonville, Florida
32210
904.428.9372
admin@mac-architect.com
AR 17019

All reports, plans, specifications, computer files, field data, notes and other documents and instruments of service prepared by the architect shall remain the property of the architect. The architect shall retain all common law, statuary and other reserved rights, including the copyright. Mary Ann Chambliss Architect

STATE OF FLORIDA
MARY ANN CHAMBLISS
AR0017019
REGISTERED ARCHITECT

This item has been electronically signed and sealed by Mary Ann Chambliss, Registered Architect on **8 18 2025** using a digital signature. Printed copies of this document are not considered signed and sealed and the signature must be verified on any electronic copies. FAC 61G15-23.005(d) & 61G1-16.005.

Issued:

8 18 2025 FOR PERMITTING

PLAN NORTH

DEMOLITION
&
RENOVATION
PLANS

A1

Commercial Kitchen Addition

for

Firefighters IAFF Local Union Hall

618 Stockton Street
Jacksonville, Florida
32204
Duval County

Jurisdiction of
City of Jacksonville

MAC ARCHITECT
Mary Ann Chambliss, Architect
2003 Woodmere Circle
Jacksonville, Florida
32210
904.428.9372
admin@mac-architect.com
AR 17019

All reports, plans, specifications, computer files, field data, notes and other documents and instruments of service prepared by the architect shall remain the property of the architect. The architect shall retain all common law, statuary and other reserved rights, including the copyright. Mary Ann Chambliss Architect

STATE OF FLORIDA
MARY ANN CHAMBLISS
AR0017019
REGISTERED ARCHITECT

This item has been electronically signed and sealed by Mary Ann Chambliss, Registered Architect on **8 18 2025** using a digital signature. Printed copies of this document are not considered signed and sealed and the signature must be verified on any electronic copies. FAC 61G15-23.005(d) & 61G1-16.005.

Issued:

8 18 2025 FOR PERMITTING

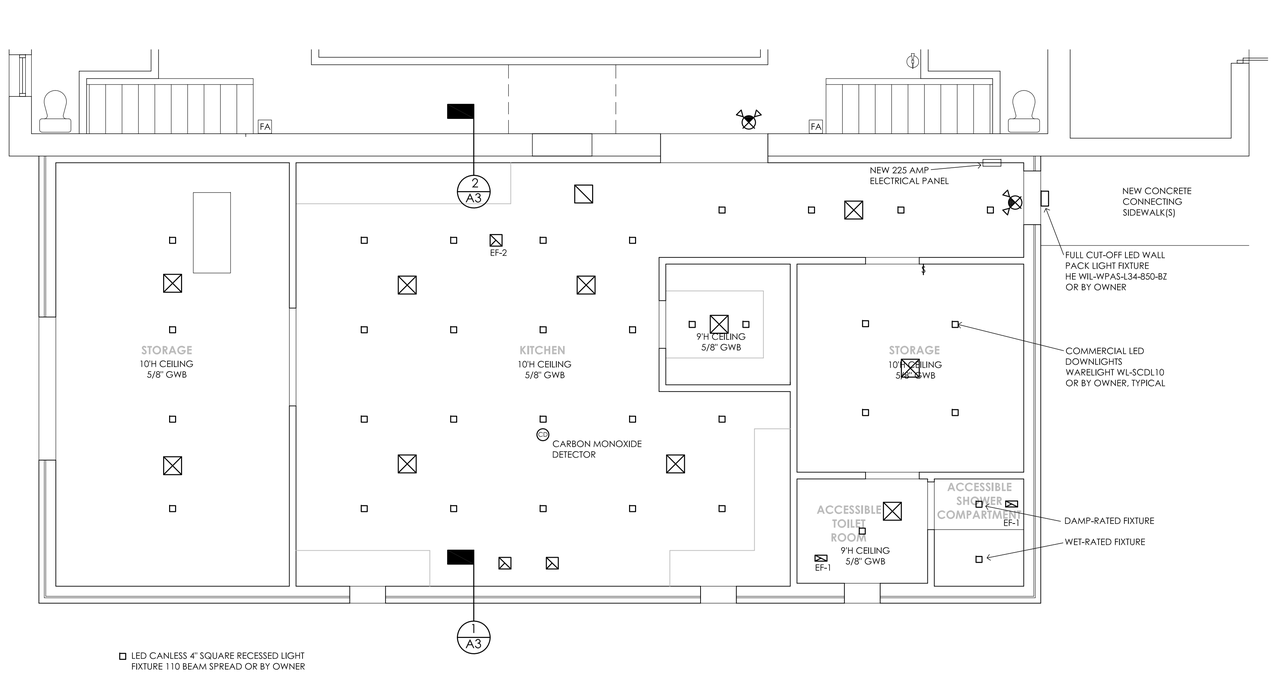

PLAN NORTH

LED CANLESS 4" SQUARE RECESSED LIGHT FIXTURE 110 BEAM SPREAD OR BY OWNER

EXHAUST FAN

SUPPLY AIR REGISTER

RETURN AIR REGISTER

REFLECTED CEILING PLAN

SCALE: 1/4" = 1'-0"

1. KITCHEN LIGHT FIXTURES SHALL HAVE A SHATTERPROOF POLYCARBONATE LENS; BE SEALED TO PREVENT THE ENTRANCE OF MOISTURE OR INSECTS. RECOMMENDED ILLUMINANCE OF 50 FOOTCANDLES MINIMUM AT COUNTERTOPS AND 20 AT FLOORS. SELECT FIXTURE WITH WIDE BEAM SPREAD, LUMENS AND SPACING SPECIFICATIONS THAT MATCH SHOWN SPACING OR SPACE CLOSER TOGETHER OR OTHERWISE AS NEEDED TO CREATE EVEN GENERAL ILLUMINATION. RECOMMEND A MINIMUM IP RATING OF IP65 AND TO BE NSF CERTIFIED NSF2 FOR FOOD SAFETY.

REFLECTED CEILING PLAN

A2

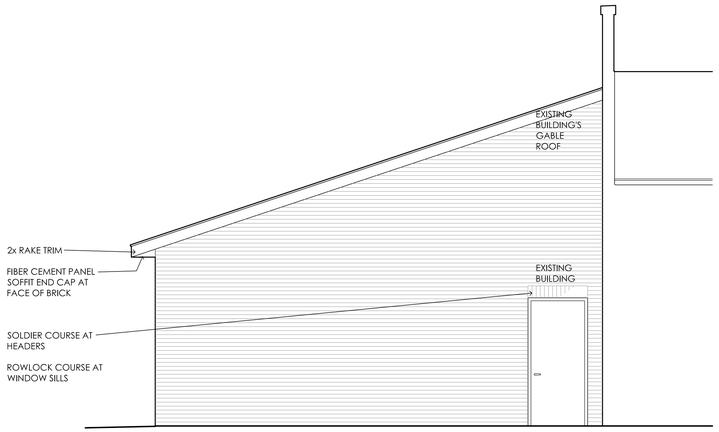

EAST-FACING EXTERIOR ELEVATION

SCALE: 1/4" = 1'-0"

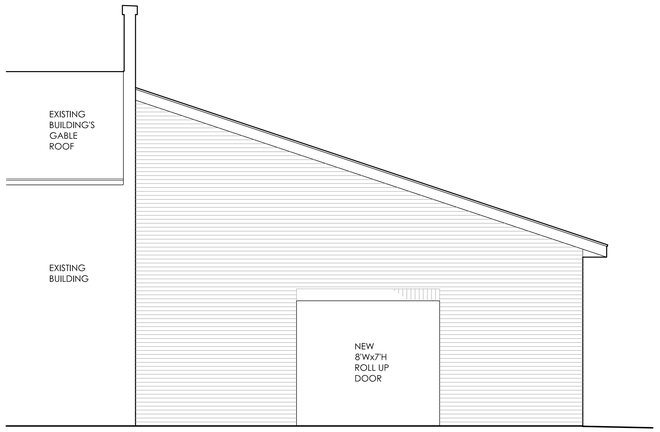

WEST-FACING EXTERIOR ELEVATION

SCALE: 1/4" = 1'-0"

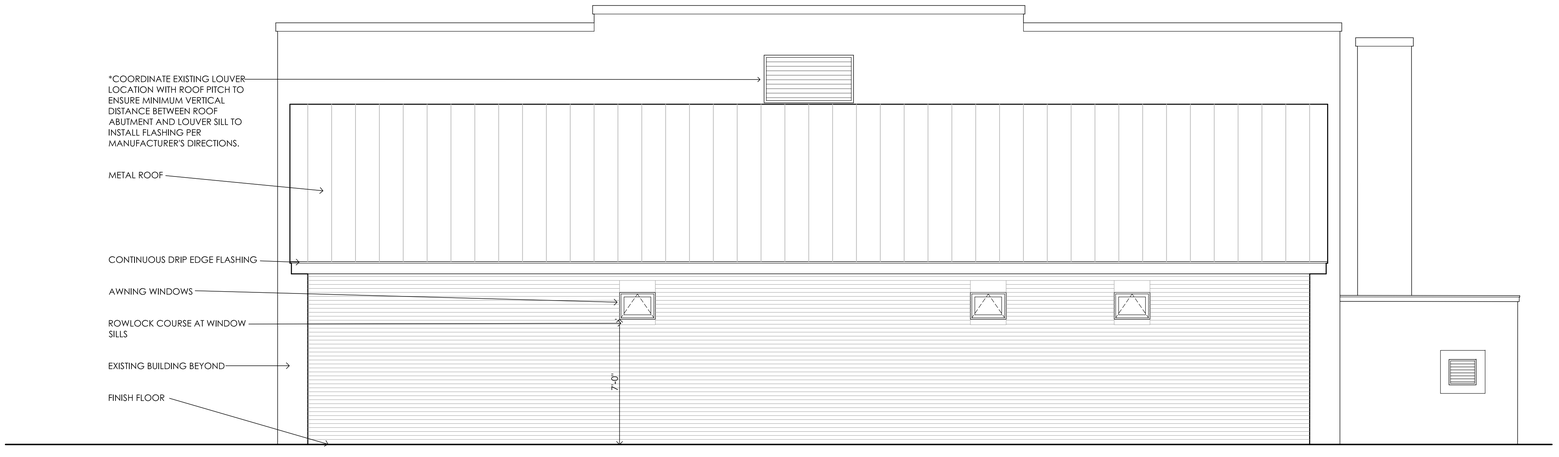

*IF THERE IS NOT ADEQUATE VERTICAL DISTANCE BETWEEN EXISTING LOUVER SILL AND NEW ROOF ABUTMENT FOR ADEQUATE FLASHING INSTALLATION PER MANUFACTURER'S INSTRUCTIONS, OWNER MAY ELECT TO SLOPE NEW ROOF SLIGHTLY LESS THAN 4:12 TO ACHIEVE THE REQUIRED MINIMUM VERTICAL DISTANCE; OR TO REPLACE THE LOUVER WITH A LESSER HEIGHT BUT GREATER WIDTH TO ENSURE THE SAME VENTILATION AREA/RATE.

SOUTH-FACING EXTERIOR ELEVATION

SCALE: 1/4" = 1'-0"

Commercial Kitchen Addition

for

Firefighters IAFF Local Union Hall

618 Stockton Street
Jacksonville, Florida
32204
Duval County

Jurisdiction of
City of Jacksonville

MAC ARCHITECT
Mary Ann Chambliss, Architect
2003 Woodmere Circle
Jacksonville, Florida
32210
904.428.9372
admin@mac-architect.com
AR 17019

All reports, plans, specifications, computer files, field data, notes and other documents and instruments of service prepared by the architect shall remain the property of the architect. The architect shall retain all common law, statuary and other reserved rights, including the copyright. Mary Ann Chambliss Architect

STATE OF FLORIDA
MARY ANN CHAMBLISS
AR0017019
REGISTERED ARCHITECT

This item has been electronically signed and sealed by Mary Ann Chambliss, Registered Architect on **8 18 2025** using a digital signature. Printed copies of this document are not considered signed and sealed and the signature must be verified on any electronic copies. FAC 61G15-23.005(d) & 61G1-16.005.

Issued:

8 18 2025 FOR PERMITTING

EXTERIOR ELEVATIONS

A3

GENERAL CONTRACTOR NOTES:

1. CONTRACTOR SHALL COMPLY WITH ALL APPLICABLE FEDERAL, STATE, AND LOCAL BUILDING CODES AND REQUIREMENTS.

2. CONTRACTOR SHALL SECURE AND PAY FOR ALL PERMITS AND INSPECTIONS REQUIRED BY THE LOCAL AUTHORITIES DURING THE COURSE OF THE WORK. THE CONTRACTOR SHALL NOTIFY THE ARCHITECT OF ANY VARIANCE WITH CODES IN FORCE. THE CONTRACTOR SHALL BE RESPONSIBLE FOR COMPLIANCE WITH ORDERS OF ANY PUBLIC AUTHORITY BEARING ON THE PERFORMANCE OF THE WORK.

3. ALL FEES, TAXES, PERMITS, APPLICATIONS AND CERTIFICATES OF INSPECTIONS AND THE FILING OF ALL THE WORK WITH GOVERNMENTAL AGENCIES TO BE THE RESPONSIBILITY OF THE CONTRACTOR. CONTRACTOR SHALL OBTAIN ALL PERMITS AND APPROVALS PRIOR TO THE COMMENCEMENT OF WORK.

4. ALL WORK SHALL BE PERFORMED BY SKILLED AND QUALIFIED WORKMEN IN ACCORDANCE WITH THE BEST PRACTICES OF THE TRADES INVOLVED AND IN COMPLIANCE WITH BUILDING REGULATIONS AND/OR GOVERNMENT LAWS.

5. EACH TRADE IS EXPECTED TO PROCEED IN A FASHION THAT WILL NOT DELAY OTHER TRADES.

6. THE CONTRACTOR IS RESPONSIBLE TO ALL TRADES UNDER THEIR JURISDICTION.

7. CONTRACTOR SHALL VERIFY ALL DIMENSIONS AND SHALL NOTIFY THE ARCHITECT OF ANY CONFLICTS BETWEEN THE CONSTRUCTION PLANS AND EXISTING CONDITIONS. THE CONTRACTOR SHALL ALSO NOTIFY THE ARCHITECT OF ANY ERROR, OMISSION OR CONFLICT IN THE DRAWINGS AND ANY RESTRICTIONS RELATED TO THE EXECUTION OF THE WORK. ALL CONFLICTS SHALL BE RESOLVED PRIOR TO THE FABRICATION OR INSTALLATION OF ANY WORK.

8. CONTRACTOR SHALL FULLY INVESTIGATE THE JOB SITE TO COMPARE THE CONTRACT DOCUMENTS AND EXISTING CONDITIONS RELATING TO CONSTRUCTION OF NEW WORK AND LABOR. THE CONTRACTOR SHALL INCLUDE COST FOR ALL WORK DESCRIBED IN THE CONTRACT DOCUMENTS AND REQUIRED OR IMPLIED BY EXISTING CONDITIONS. THE SUBMISSION OF A PROPOSAL SHALL BE CONSTRUED AS EVIDENCE THAT SUCH AN EXAMINATION HAS BEEN MADE AND LATER CLAIMS FOR LABOR, EQUIPMENT OR MATERIALS REQUIRED OR FOR DIFFICULTIES ENCOUNTERED, WHICH WOULD HAVE BEEN FORESEEN HAD SUCH AN EXAMINATION BEEN MADE WILL NOT BE ACCEPTED.

9. THE CONTRACTORS SHALL BE SOLELY RESPONSIBLE FOR AND HAVE CONTROL OVER ALL CONSTRUCTION MEANS, TECHNIQUES, SEQUENCES AND PROCEDURES AND FOR COORDINATING ALL PORTIONS OF THE WORK REQUIRED BY THE CONTRACT DOCUMENTS.

10. THE CONTRACTORS SHALL THOROUGHLY REVIEW THE EXISTING CONDITIONS TO IDENTIFY THE IMPACT ON ANY EXISTING FUNCTION AND SHALL COORDINATE HIS WORK SCHEDULES PRIOR TO COMMENCEMENT OF NEW WORK WITH OWNER.

11. UNLESS SPECIFICALLY NOTED TO THE CONTRARY, ALL NEW WORK IS IN CONTRACT. CONTRACTORS SHALL FURNISH ALL LABOR, MATERIALS, EQUIPMENT AND SERVICES NECESSARY TO COMPLETE THE PROJECT OUTLINED IN THIS SET OF PLANS. SEE INTERIOR DESIGNER'S DRAWINGS FOR OWNER/CONTRACTOR FURNISHED/INSTALLED MILLWORK AND FURNISHINGS.

12. SUBSTITUTION OF MATERIALS AND/OR CONSTRUCTION ITEMS SPECIFIED WILL NOT BE ALLOWED WITHOUT PRIOR WRITTEN APPROVAL OF THE ARCHITECT.

13. SUBSTITUTIONS WILL BE CONSIDERED WHEN THE SPECIFIED ITEMS CAN NOT BE OBTAINED, THE OWNER REQUESTS A CHANGE OR A SUBSTANTIAL SAVINGS CAN BE PROVIDED TO T HE OWNER.

14. OWNER'S WRITTEN AUTHORIZATION MUST BE OBTAINED PRIOR TO THE ORDERING OF ANY MATERIALS, CONTRACTS, OR THE EXECUTION OF ANY WORK IN EXCESS OF ORIGINAL CONTRACT.

15. ALL MATERIALS TO BE NEW, UNUSED AND OF THE HIGHEST QUALITY IN EVERY RESPECT, UNLESS OTHERWISE NOTED. MANUFACTURED MATERIALS AND EQUIPMENT TO BE STORED AND INSTALLED IN ACCORDANCE WITH MANUFACTURER'S WRITTEN RECOMMENDATIONS AND INSTRUCTIONS.

16. ALL WORK AND MATERIALS SHALL BE GUARANTEED AGAINST DEFECTS FOR A PERIOD NOT LESS THAN 1 YEAR AFTER APPROVAL OF FINAL PAYMENT.

17. ALL ADJACENT WORK SHALL BE PROTECTED FROM DAMAGE CAUSE BY THIS WORK. ANY ASSOCIATED DAMAGE TO THE EXISTING BUILDING IS THE FINANCIAL RESPONSIBILITY OF THE CONTRACTOR.

18. THE CONTRACTOR SHALL KEEP THE PROJECT SITE CLEAN AND FREE FROM HAZARDS AT ALL TIMES. ALL EXISTING EGRESS REQUIREMENTS ARE TO BE MAINTAINED. THE CONTRACTOR SHALL REMOVE ALL TRASH AND DEBRIS, BROOM CLEAN THE ENTIRE PROJECT AREA, AND LEAVE THE SITE IN A CLEAN CONDITION DAILY. CLEAN INTERIOR SPACES PRIOR TO THE START OF FINISH PAINTING. SCHEDULE OPERATIONS SUCH THAT DUST AND OTHER CONTAMINANTS WILL NOT FALL ON WET, NEWLY-COATED SURFACES.

19. CONTRACTOR SHALL INCLUDE IN BID THE REMOVAL OF DEBRIS AND CLEANING AFTER ALL FINISIH TRADES.

20. THE CONTRACTOR SHALL VERIFY ALL DIMENSIONS IN THE FIELD. DO NOT SCALE DRAWINGS; DIMENSIONS GOVERN.

21. CONTRACTOR SHALL SUBMIT FOR ARCHITECT'S AND/OR OWNER'S REVIEW PRIOR TO FABRICATION OR PURCHASE, SHOP DRAWINGS, OR SAMPLES FOR ALL ITEMS AS REQUIRED IN THE CONTRACT DOCUMENTS.

22. CONTRACTOR SHALL DO ALL CUTTING, FITTING, AND PATCHING WORK THAT MAY BE REQUIRED TO MAKE ALL PARTS OF THE PROJECT FIT TOGETHER PROPERLY.

23. ALL PARTITIONS SHALL BE CONSTRUCTED IN ACCORDANCE WITH MANUFACTURER'S RECOMMENDATIONS FOR DEFLECTIONS NOT TO EXCEED L/240 OF THE SPAN.

24. THE CONTRACTOR SHALL PROVIDE AND INSTALL NONCOMBUSTIBLE BRACING AND BLOCKING AS REQUIRED TO SUPPORT ANY WALL-MOUNTED FIXTURES, ACCESSORIES, EQUIPMENT, SHELVING, COUNTERTOPS, CABINETS, ETC. ALL WOOD BLOCKING OR BRACING SHALL BE PRESSURE TREATED, FIRE RETARDANT.

25. ALL FINISH HARDWARE SHALL BE ADA COMPLIANT AND SHALL COMPLY WITH ALL APPLICABLE SECTIONS OF NFPA 101 FIRE SAFETY CODE.

26. CONTRACTOR SHALL PROVIDE AT CLOSE OF PROJECT 2 SETS OF OPERATIONS AND MAINTENANCE MANUALS WITH ALL WARRANTIES AND GUARANTEES IN A 3 RING BINDER TO OWNER'S FACILITY MANAGEMENT.

27. THESE DOCUMENTS ARE THE PROPERTY OF ARCHITECT OR ENGINEER AS NOTED IN TITLE BLOCK. NO PART OF THESE DOCUMENTS SHALL BE USED FOR ANY PROJECT EXCEPT FOR THIS PROJECT, NOR REPRODUCED OR SHARED WITHOUT THE PRIOR WRITTEN CONSENT OF ARCHITECT AND/OR ENGINEER.

28. UPON COMPLETION OF WORK, CONTRACTOR SHALL PROVIDE A CLEAN, DUST FREE SPACE. REMOVE LABELS, STAINS, GREASE, ETC. FROM ALL SITE EXPOSED INTERIOR AND EXTERIOR SURFACES. WASH AND SHINE GLAZING AND MIRRORS. PRIOR TO FINAL COMPLETION OR OWNER OCCUPANCY, CONTRACTOR SHALL NOTIFY OWNER'S REPRESENTATIVE WHO WILL COMPILE A "PUNCH LIST" OF ITEMS TO BE CORRECTED PRIOR TO FINAL PAYMENT.

29. ALL FINISHES SHALL BE INSTALLED IN ACCORDANCE WITH MANUFACTURER'S RECOMMENDATIONS AND INSTRUCTIONS FOR THE TYPE OF MATERIAL AND INSTALLATION SPECIFIED. ALL SURFACES SHALL BE PROPERLY PRIMED OR PREPARED PRIOR TO INSTALLATION OF FINISHES.

30. PAINT TO BE APPLIED IN ACCORDANCE WITH MANUFACTURER'S DIRECTIONS ON A PROPERLY PREPARED SURFACE, WHICH SHALL BE STRAIGHT AND SMOOTH. MINIMUM ONE PRIME COAT AND ONE FINISH COAT. FINISH COAT SHALL COMPLETELY COVER WITH NO STREAKING OR BLEEDING OF UNDERCOATS. BRICK SHALL BE THOROUGHLY CLEANED/DUSTED WITH A NYLON BRISTLE BRUSH AND SOAP/WATER SOLUTION AND ALLOWED TO DRY THOROUGHLY BEFORE PRIMING/PAINTING. ED

31. ALL INSTALLED PLUMBING, MECHANICAL, AND ELECTRICAL EQUIPMENT SHALL OPERATE QUIETLY AND BE FREE OF VIBRATION.

32. CONTRACTOR SHALL TAG KEYS FOR ALL EQUIPMENT, DOORS, ETC. AND PROVIDE TO OWNER AT CLOSE OF PROJECT. WARRANTIES, OWNER'S MANUALS AND OTHER PRODUCT SPECIFICATION SHEETS SHALL BE PROVIDED TO OWNER AT CLOSE OF PROJECT IN A 3 RING BINDER BY DIVISION.

33. REFER TO BUILDING OWNER AND/OR LANDLORD'S BUILDING RULES AND REQUIREMENTS FOR WARRANTIES, RECORDS AND INSURANCE.

34. GENERAL CONTRACTOR PROVIDED ARCHITECT OF RECORD WITH EXISTING BUILDING DRAWINGS IN CAD FORMAT, PROVIDED TO HIM BY OTHERS. THE ARCHITECT FIELD MEASURED CORRIDOR WIDTHS, DOORS AND OTHER ELEMENTS, VIDEO-RECORDED THE ENTIRE SUITES AND VISUALLY OBSERVED ALL AREAS INSIDE AND OUTSIDE OF SUITES, BUT NOT MEASURE EVERY ELEMENT, AND RESERVES THE RIGHT TO RELY ON THE ACCURACY OTHERWISE OF THE EXISTING CONDITIONS ILLUSTRATED IN THE CAD PROVIDED.

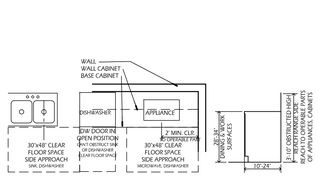

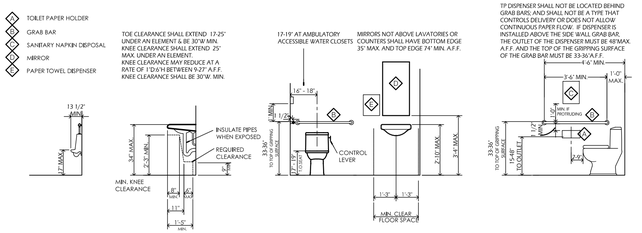

ACCESSIBILITY DIAGRAMS

SCALE : 1/4" = 1'-0"

NOTES:

1. REFER TO FLORIDA BUILDING CODE, ACCESSIBILITY OR NOTIFY ARCHITECT WITH ANY ACCCESSIBILITY ELEMENTS IN QUESTION, IF ANY. ALL ELEMENTS IN ALTERATIONS WORK AREA SHALL BE 100% ACCESSIBILITY-COMPLIANT.

2. ALLOWABLE STRESSES SHALL NOT BE EXCEEDED FOR MATERIALS USED WHEN A VERTICAL OR HORIZONTAL FORCE OF 250 POUNDS IS APPLIED AT ANY POINT ON THE GRAB BAR, FASTENER, MOUNTING DEVICE, OR SUPPORTING STRUCTURE. SEE FBC-ACCESSIBILITY SECTION 609 FOR ADDITIONAL GRAB BAR REQUIREMENTS.
HTTPS://CODES.ICCSAFE.ORG/CONTENT/FLAC2020P1/CHAPTER-6-PLUMBING-ELEMENTS-AND-FACILITIES#FLAC2020P1_CH06_SEC609

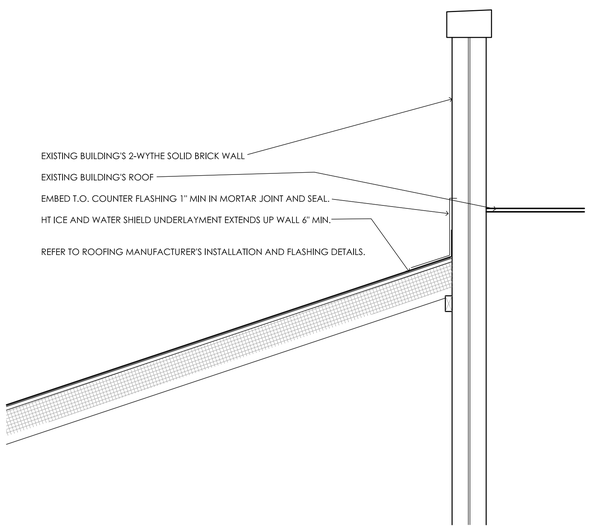

2 NEW ROOF ABUTTING EXISTING SOLID MASONRY WALL
SCALE: 3/4" = 1'-0"

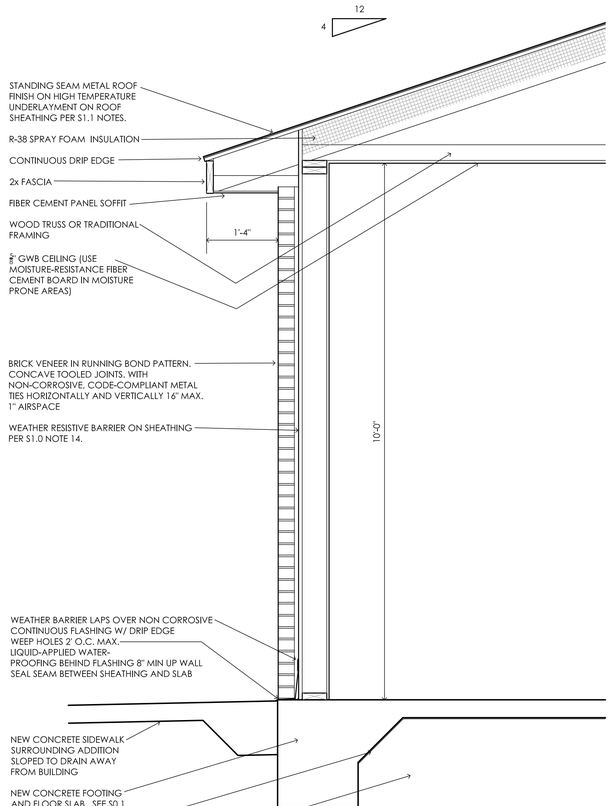

1 WALL SECTION
SCALE: 1/4" = 1'-0"

GENERAL NOTE: SELECT FLASHING IN CONTACT WITH OTHER MATERIALS TO AVOID GALVANIC ACTION. INSTALL ROOF AND WINDOW FLASHING ACCORDING TO ROOF AND WINDOW MANUFACTURER'S APPROVED INSTALLATION INSTRUCTION,FBC-BUILDING 1403.4 FOR FLASHING AT EXTERIOR WALLS, AND 1503.2 FOR FLASHING AT ROOF

Commercial Kitchen Addition
for
Firefighters IAFF Local Union Hall

618 Stockton Street
Jacksonville, Florida
32204
Duval County

Jurisdiction of
City of Jacksonville

MAC ARCHITECT
Mary Ann Chambliss, Architect
2003 Woodmere Circle
Jacksonville, Florida
32210
904.428.9372
admin@mac-architect.com
AR 17019

All reports, plans, specifications, computer files, field data, notes and other documents and instruments of service prepared by the architect shall remain the property of the architect. The architect shall retain all common law, statuary and other reserved rights, including the copyright. Mary Ann Chambliss Architect

STATE OF FLORIDA
MARY ANN CHAMBLISS
AR0017019
REGISTERED ARCHITECT

This item has been electronically signed and sealed by Mary Ann Chambliss, Registered Architect on **8 18 2025** using a digital signature. Printed copies of this document are not considered signed and sealed and the signature must be verified on any electronic copies. FAC 61G15-23.005(d) & 61G1-16.005.

Issued:

8 18 2025 FOR PERMITTING

SECTIONS
NOTES
DIAGRAMS

A4

North and east façades of building

West façade of building

South façade of building

Close up of addition area on the south façade of building

North of subject site – I 10 overpass

West of subject site – residences

South of subject site – gas station and school

East of subject site – JAOF hall and future health and wellness center

COA-25-32959

1718 Osceola St

October 22, 2025

Report of the Jacksonville Planning Department
Certificate of Appropriateness Application COA-25-32959

Address: 1718 Osceola Street RE# 090561-0000

Location: Northwest corner of Osceola Street and St. Johns Avenue

Owner: Thomas Lyons
1718 Osceola Street
Jacksonville, Florida 32204

Applicant: Josiah Duff
JAA Architecture
2063 Oak Street
Jacksonville, Florida 32204

Year Built: 1922 *(Property Appraiser)*

Designation: St. Johns Quarter; Contributing

Request: New Construction – Addition
Demolition – Partial Demolition
Site Work – Pool

Summary Scope of Work:
1. Demolish sections of the accessory structure
2. Demolish the side stairway of the primary structure
3. Construct an addition to the accessory structure
4. Construct a two-story lift with deck that connects the primary and accessory structures
5. Construct a new in-ground swimming pool

Recommendation: **Approve with Conditions**

Conditions:
1. Materials and height shall be substantially consistent with the plans dated **September 12, 2025**, or as otherwise approved by the Historic Preservation Section.
2. The location and orientation shall be substantially consistent with the site plan dated **September 22, 2025**, or as otherwise approved by the Historic Preservation Section.
3. Columns shall have caps and bases.
4. The fascia boards and soffits shall be composed of wood or a cementitious material (no vinyl or PVC).

5. All windows shall be installed in accordance with the latest version of the HPS Window Supplement.
6. All doors shall be installed in accordance with the latest version of the Door Design Guidelines.
7. Prior to the final inspection of any building permit, the owner or their agent shall submit to the Historic Preservation Section an affidavit and any supplementary evidence that verifies compliance with all conditions of the COA final order.
8. The windows and doors shall have trim that matches the design of the existing windows and doors.
9. The railing system shall be made of wood or wood composite materials and the spindles centered between an upper and lower rail with no exposed ends (no vinyl or PVC).
10. The right elevation shall have a window at the center of the second-floor façade.
11. The rear elevation shall have a window at the center of both the first floor and second-floor façade.
12. The swimming pool shall be located behind a privacy fence.
13. The design and location of the pool (and any hardscaping) shall be substantially consistent with the site plan dated **September 12, 2025**.
14. The demolition shall be limited to the area indicated on the site plan dated **September 12, 2025**.

PROJECT DESCRIPTION

COA-25-32959 seeks to conduct partial demolition and new construction as well as site work to a contributing property within the Riverside Avondale Historic District. The property is a corner lot located at the northwest of the intersection of St. Johns Avenue and Osceola Street. The primary structure on the property is a two-story Prairie School Style residence and there is an unlisted two-story accessory structure built during the period of significance. The primary structure is characterized by its hipped roof, its brick chimney, its 9/1 sash windows, its use of brick and stucco on the first floor exterior, its stucco cladding on the second floor exterior, and its five-bay porch with square brick columns. The accessory structure on the property is generally compatible in design and materials with the primary structure and has been altered through at least one previous additions. As proposed, the applicant is seeking to demolish two sections of the accessory structure and a side stairway of the primary structure. Once removed, the applicant proposes to construct an addition to the accessory structure and to construct a two-story lift that will connect the primary and accessory structures. The applicant also proposes to install a new in-ground swimming pool to the side of the existing deck along St. Johns Avenue.

According to the 2025 COA Matrix, additions that exceed 25% of the existing building footprint must be reviewed by the Jacksonville Historic Preservation Commission (JHPC). The proposed addition to the accessory structure will more than double the square footage of the section of the structure that is proposed to be kept. Furthermore, the pool may be readily street visible from St. Johns Avenue.

STAFF SUMMARY AND ANALYSIS

Staff considered the applicable Design Guidelines for the Riverside Avondale Historic District and the Ordinance Code criteria found in Sections 307.106(k), 307.106(l), 307.106(m), 307.106(n), and 307.106(o). The following is the Staff's analysis:

- The proposed partial demolition to the accessory structure and the removal of the secondary stairway to the primary structure will not result in the destruction of any significant architectural or historic fabric. Furthermore, if approved, the demolition will be followed by the new construction of an addition that will allow for new and compatible use of the primary and accessory structures. This is consistent with Sections 307.106(k)(1-3) and 307.106(n)(1-10).
- As designed, the height and roof form of the proposed addition is compatible with the existing height and roof form of the accessory and primary structures. As such, the proposed work is consistent with Sections 307.106(k)(1) and 307.106(m)(1 and 4).
- Section 307.106(m)(2) states, "The proportions and relationships between doors and windows shall be compatible with the architectural style and character of the landmark and with surrounding structures in a historic district." As conditioned, the rear and right elevations which were proposed to be blank wall spaces will have operable windows that match the dimensions and design of the existing windows. The designs of the windows and doors as conditioned are compatible with the existing primary structure, which is consistent with Section 307.106(m)(2) and the Design Guidelines.

- The Design Guidelines for the District reference Standards Nine and Ten of the Secretary of the Interior's Standards for Rehabilitation. Standard Nine emphasizes that exterior alterations shall not destroy historic materials and are differentiated from the old while being compatible in massing, size, scale, and architectural features in order to preserve the historical integrity of the property and its immediate surroundings. Standard Ten refers to the nature of additions and if removed in the future, the essential form and integrity of the historic property and its environment would be unimpaired. No significant historic fabric will be impacted since the proposed addition is located at the back corner of the lot and if the work were to be removed in the future, the alterations could be reverted. As such, the proposed scope of work is consistent with Sections 307.106(k)(1 and 2), the Historic District Design Guidelines, Section on "Additions" and "New Construction."
- The addition and elevator structure, as conditioned, will be compatible with the primary historic structure. The work will be conducted in a minimally visible location, subordinate in height to the primary structure, and compatible in materials and design with the architecture of the property. This is consistent with Sections 307.106(k)(1-3) and 307.106(m)(3 and 6-8).
- The applicant has indicated on the plans that the windows that will be removed from the primary structure during the installation of the elevator will be salvaged and relocated to the new addition of the accessory structure.
- As proposed, the pool will be minimally visible from the street and will be enclosed by a pre-existing fence. The installation of the pool will not damage or detract from any significant architectural or historical features of the site. This is consistent with Sections 307.106(k)(1-3) and 307.106(l)(1, 2, 5, and 8).
- Consistent with Section 307.106(k)(4), the work will be completed within a reasonable period of time.

For these reasons, it is the position of the Planning Department that the proposed work under the stated conditions is consistent with:

1. Chapter 307.106(k) General Standards: 1-4
2. Chapter 307.106(l) Guidelines on "Alterations": 1-2, 5, and 8
3. Chapter 307.106(m) Guidelines on "New Construction": 1-4 and 6-8
4. Chapter 307.106(n) Guidelines on "Demolition": 1-10
5. Historic District Design Guidelines, Sections on "Additions" and "New Construction"

CODE CRITERIA AND DESIGN GUIDELINES

General Criteria

- 307.106(k)(1) - The effect of the proposed work on the landmark, landmark site, or property within a historic district upon which such work is to be done;

- 307.106(k)(2) - The relationship between such work and other structures on the landmark site or other property in the historic district;

- 307.106(k)(3) – The extent to which the historic, architectural, or archaeological significance, architectural style, design, arrangement, texture and materials of the landmark or the property will be affected;

- 307.106(k)(4) – Whether the plans may be carried out by the applicant within a reasonable period of time.

Alterations

- 307.106(l)(1) – Every reasonable effort shall be made to use a property for its originally intended purpose, or to provide a compatible use for a property that requires minimal alteration of the building structure, or site.

- 307.106(l)(2) – The distinguishing original qualities or character if a building, structure, or site shall not be destroyed. The removal or alteration of any historic material or distinctive architectural features shall be avoided when possible.

- 307.106(l)(5) – Distinctive stylistic features or examples of skilled craftsmanship which characterize a building, structure, or site, shall be treated with sensitivity.

- 307.106(l)(8) – Every reasonable effort shall be made to protect and preserve archaeological resources affected by, or adjacent to, any acquisition, protection, stabilization, preservation, rehabilitation, restoration, or reconstruction project.

New Construction

- 307.106(m)(1) – *Height.* The height of any proposed alteration or construction shall be compatible with the style and character of the landmark and with surrounding structures in a historic district.

- 307.106(m)(2) – *Proportions of windows and doors.* The proportions and relationships between doors and windows shall be compatible with the architectural style and character of the landmark and with surrounding structures in a historic district.

- 307.106(m)(3) – *Relationship of building masses, setbacks and spaces.* The relationship of a structure within an historic district to the open space between it and adjoining structures shall be compatible.

- 307.106(m)(4) – *Roof shape.* The design of the roof shall be compatible with the architectural style and character of the landmark and surrounding structures in a historic district.

- 307.106(m)(6) – *Scale.* The scale of the structure after alteration, construction, or partial demolition shall be compatible with its architectural style and character and with surrounding structures in an historic district.

- 307.106(m)(7) – *Directional expression.* Facades in historic districts shall blend with other structures with regard to directional expression. Structures in an historic district shall be compatible with the dominant horizontal or vertical expression of surrounding

structures. The directional expression of a landmark after alteration, construction, or partial demolition shall be compatible with its original architectural style and character.

- 307.106(m)(8) – *Architectural details.* Architectural details including materials and textures shall be treated so as to make a landmark compatible with its original architectural style and character and to preserve and enhance the architectural style or character of a landmark or historic district. The Commission will give recommendations as to appropriate colors for any landmark or historic district.

Demolition

- 307.106(n)(1) – The historic or architectural significance of the building or structure;
- 307.106(n)(2) – The importance of the building or structure to the ambience of the historic district;
- 307.106(n)(3) – The difficulty or the impossibility of reproducing such a building or structure because of its design, texture, material, detail or unique location;
- 307.106(n)(4) – Whether the building or structure is one of the last remaining examples of its kind in the neighborhood, the County or the region;
- 307.106(n)(5) – Whether there are definite plans for reuse of the property if the proposed demolition is carried out, and what effect of those plans on the character of the surrounding area would be;
- 307.106(n)(6) – The difficulty or the impossibility of saving the building or structure from collapse;
- 307.106(n)(7) – Whether the building or structure is capable of earning reasonable economic return on its value
- 307.106(n)(8) – Whether there are other feasible alternatives to demolition;
- 307.106(n)(9) – Whether the property no longer contributes to an historic district or no longer has significance as an historic, architectural or archaeological landmark; and
- 307.106(n)(10) – Whether it would be undue economic hardship to deny the property owner the right to demolish the building or structure.

Historic District Design Guidelines, "Additions" and "New Construction"

- Standard 1: A property shall be used for its historic purpose or be placed in a new use that requires minimal changes to the defining characteristics of the building and its site and environment.
- Standard 2: The historic character of a property shall be retained and preserved. The removal of historic materials or alteration of features and spaces that characterize a property shall be avoided.

- Standard 5: Distinctive features, finishes, and construction techniques or examples of craftsmanship that characterize a historic property shall be preserved.

- Standard 9: New additions, exterior alterations, or related new construction shall not destroy historic materials that characterize the property. The new work shall be differentiated from the old and shall be compatible with the massing, size, scale, and architectural features to protect the historic integrity of the property and its environment.

- Standard 10: New additions and adjacent or related new construction shall be undertaken in such a manner that if removed in the future, the essential form and integrity of the historic property and its environment would be unimpaired.

LOCATION MAP

PICTURE OF PROPERTY WITH POSTED SIGN

PROPOSED ELEVATION DRAWINGS DATED SEPTEMBER 12, 2025

" NEW 2-STORY ADDITION "
LYONS RESIDENCE
1718 OSCEOLA STREET
JACKSONVILLE, FLORIDA 32204

NOT FOR CONSTRUCTION

DATE: 09.10.2025
PRJCT #: 25.0177

SHEET
A8
SCHEMATIC DESIGN

SITE PLAN DATED SEPTEMBER 22, 2025

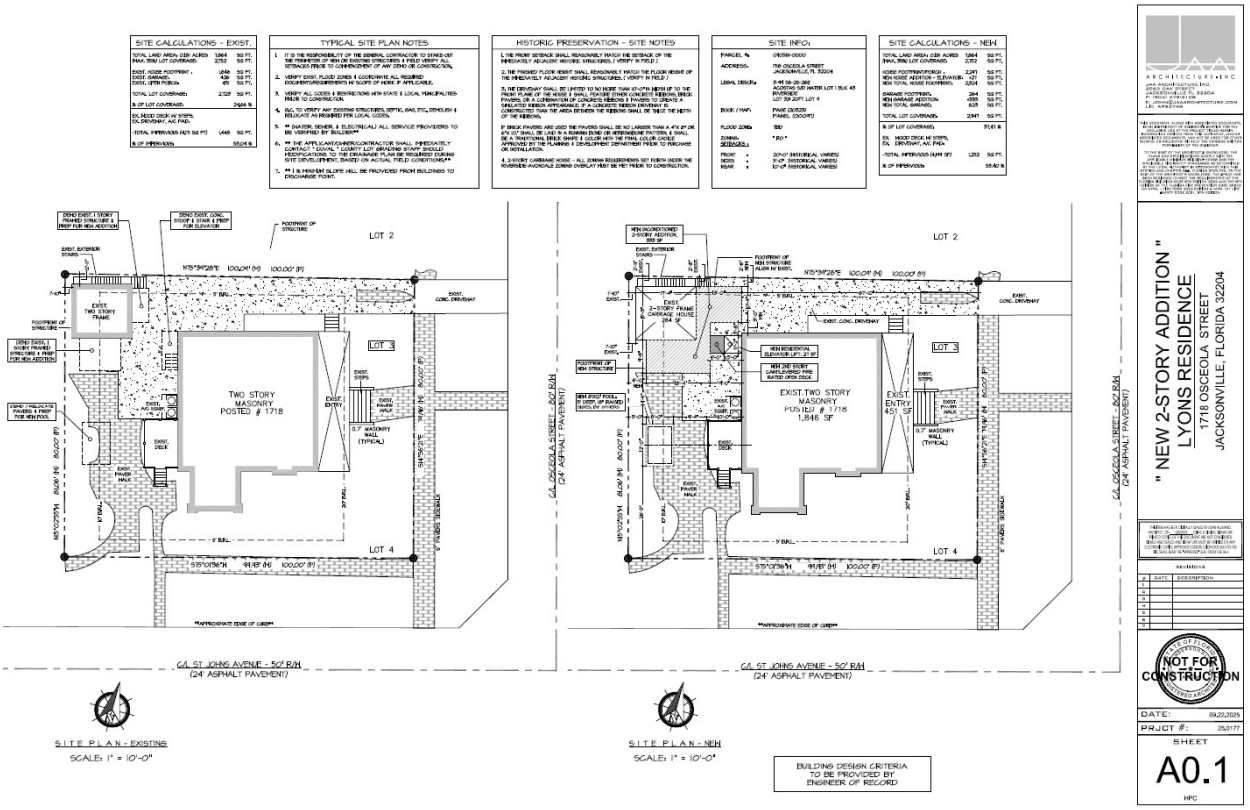

Application For Certificate Of Appropriateness

Application Info

Tracking #	32959	**Application Status**	FOUND SUFFICIENT
Date Started	09/15/2025	**Date Submitted**	09/15/2025

Planning and Development Department Info

COA #	COA-25-32959
Admin Review	☐
Admin Recommendation	FORWARD
Admin Date Of Action	9/23/2025
Forwarded to JHPC	☑
JHPC Meeting Date	10/22/2025
Staff Recommendation	N/A
JHPC Recommendation	N/A
JHPC Date Of Action	N/A

Admin Details
N/A

JHPC Details
N/A

General Information On Applicant

Last Name DUFF
First Name JOSIAH
Middle Name

Company Name JAA ARCHITECTURE

Mailing Address 2063 OAK STREET

City JACKSONVILLE
State FL
Zip Code 32204

Phone 904 379 5108
Fax 904
Email JOSIAH@JAAARCHITECTURE.COM

General Information On Owner(s)

Agent represents ◉ **Owner** ○ **Contractor** ○ **Architect** ○ **Consultant** ○ **Other**

Last Name LYONS
First Name THOMAS
Middle Name

Company/Trust Name

Mailing Address 1718 OSCEOLA STREET

City JACKSONVILLE
State FL
Zip Code 32204

Phone 7179917409
Fax 904
Email TOMONLINE68@GMAIL.COM

Description Of Property

Property Appraiser's RE #(s) (10 digit number with a space ###### ####)

Map	RE#
	090561 0000

Location Of Property

General Location
St. Johns Quarter Historic District

House #	Street Name, Type and Direction	Zip Code
1718	OSCEOLA ST	32204

Type Of Improvement

- [ ] **Addition**
- [ ] **Driveway**
- [ ] **New Construction**
- [x] **Accessory Structures**
- [ ] **Alteration**
- [ ] **Relocation**
- [ ] **Window Replacement**
- [ ] **Other/Minor Repairs**
- [ ] **Fencing**
- [ ] **Demolition**
- [ ] **Reroof**

Describe proposed work below. Note affected features and changes in design or materials. Be as specific, brief, and legible as possible.
(Example: reroof; replacing gray 3-tab shingles with black architectural shingles).

Proposed Work
WORK TO INCLUDE THE ADDITION OF A PERSONAL ELEVATOR LIFT FROM GRADE TO MAIN FLOORS AND SECOND FLOOR OF THE CARRIAGE HOUSE. ADDITION TO THE CARRIAGE HOUSE WILL BE 2-STORY STORAGE SPACES, WITH FIRE RATED WALLS AND ROOF OVERHANGS AT THE SIDES CLOSEST TO THE PROPERTY LINES. WINDOWS WILL BE REPURPOSED IN THE ADDITION, IF CONDITION IS NOT SALVAGEABLE, AN APPROVED WINDOW WILL BE INSTALLED: SINGLE HUNG WITH 9 OVER 0 FOR SECOND FLOOR AND 0 OVER 0 AT THE FIRST LEVEL SINGLE HUNG WINDOWS - TO MATCH THE EXISTING CHARACTER. THE NEW GARAGE DOOR WILL BE WINDOWLESS AND SIMILAR TO THE EXISTING IN STYLE. THE EXISTING EXTERIOR STAIRS WILL REMAIN. THE ROOF SLOPE WILL MATCH THE EXISTING PITCH AND SHINGLED MATERIAL. THE EXTERIOR WILL BE STUCCO TO MATCH EXISTING.

Addition Information

Is this a violation? Check the box if it is. [ ]

If you have been working with a planner choose one from the list WELLS, ARIMUS

Additional Documents Provided

	Description
[x]	SITE PLANS-EXISTING AND NEW, DEMO PLANS
[x]	FLOOR PLANS AND ROOF PLAN
[x]	ELEVATIONS-EXISTING AND NEW
[x]	AREA OF ADDITION SUBMITTED 9-22-2025
[x]	OVERALL SITE SUBMITTED 9-22-2025
[x]	WINDOW BROCHURE SUBMITTED 9-22-2025
[x]	COMMUNICATION FROM 9-22-2025

Application Certification

For applications that can be approved administratively, there is no application fee.

For all applications that must go before the Historic Preservation Commission, a fee will be applied based on the type of work performed.

Application completeness review: All applications for Certificate of Appropriateness ("Application") will be reviewed for completeness by Planning and Development Department Staff. Any Application determined to be incomplete, will be returned to the applicant with comments detailing the deficiencies. No further action on the Application will take place until the application deficiencies are addressed. Once the Application is determined to be complete, Planning and Development Department Staff will prepare an invoice for the cost of the Application.

Payment deadline: The Invoice must be paid by the payment deadline in order to have the Application heard on the next scheduled Jacksonville Historic Preservation Commission (JHPC) regular meeting. The payment deadline is outlined on the City of Jacksonville's Planning and Development Department Website. Only sufficient applications will be invoiced. It is for the benefit of the applicant to supply staff with a sufficient applications in advance of the payment deadline. Due to the complexity and volume of Applications received by the Planning and Development Department, there is no guarantee that COA Applications submitted on the day of the payment deadline will be heard at the next regular meeting of the JHPC.

I, hereby, certify that I am the owner or the authorized agent of the owner(s) of the property described herein, that all answers to the questions in this application and all information contained in the material attached to and made a part of this application, are accurate and true to the best of my knowledge and belief. I also attest by my signature that all required information for this application is completed and duly attached in the prescribed order. Furthermore, if the package is found to be lacking the above requirements, I understand that the application will be returned for correct information.

☑ I UNDERSTAND THE ABOVE DISCLAIMER REGARDING APPLICATION REVIEW. AGREED TO AND SUBMITTED.

City of Jacksonville, Florida

Planning Department

Community Planning Division
214 North Hogan Street, Suite 300
Jacksonville, FL 32202
(904) 255-7800
www.coj.net

ONE CITY. ONE JACKSONVILLE.

NOTICE OF PUBLIC HEARING SIGN POSTING AFFIDAVIT FOR APPLICATION FORWARDED TO THE JACKSONVILLE HISTORIC PRESERVATION COMMISSION

Date: 9.25.25

COA#: 25-32959

Address: 1719 OSCEOLA ST
JACKSONVILLE FL 32204

Owner: TOM LYONS

As required by Sec. 307.106.(f) of the City of Jacksonville Ordinance Code: The applicant for a certificate of appropriateness shall post signs at intervals of not more than 200 feet along all street sides of land upon which the request for a certificate of appropriateness is made. Signage should be posted at least 14 days prior to the scheduled public hearing. Where the land does not have frontage on a public street, the signs shall be erected on the nearest street right-of-way with an attached notation indicating generally the direction and distance to the land upon which the application for a certificate of appropriateness has been filed, or at such other locations and at such intervals, as determined by the Planning and Development Department, as will ensure that the signs will be seen by as many persons as possible. The signs shall be maintained by the applicant until a final determination has been made by the Commission on the application for a certificate of appropriateness. If the signs are not posted within the time requirements, the public hearing notice will be deemed inadequate and no action shall be taken until proper posting is accomplished. The signs shall be removed by the applicant within ten days after final action.

I hereby attest that the attached pictures show the NOTICE OF PUBLIC HEARING SIGNS

provided to me for application 25-32959 **were posted on the property/site located at:**

090561
Real Estate Number(s)

1719 OSCEOLA ST -
Street Address

JACKSONVILLE FL 32204
City, State Zip Code

Printed Name JOHN DRUM AGENT FOR TOM LYONS VIA JAA ARCHITECTURE

Signature JD

Dated this 26 day of September, 20 25

3-99 56-2S-26E
ACOSTAS S/D WATER LOT 1 BLK 43
RIVERSIDE
LOT 3,N 20FT LOT 4

LYONS THOMAS B
1718 OSCEOLA ST
JACKSONVILLE, FL 32204

2024

R-090561-0000

PRINTED 10/10/2024
BY: pao

Map Id: 6422 517101.02 1.55 1.00 1.00 COMM RIVERSIDE E OF KING ST

BUILDING CHARACTERISTICS

CATEGORY	TYPE	%	PTS
Exterior Wall	17 C.B. STUCCO	75	29.00
Exterior Wall	20 FACE BRICK	25	12.00
Roof Struct	3 GABLE OR HIP	100	6.00
Roofing Cover	3 ASPH/COMP SHNG	100	4.00
Interior Wall	3 PLASTERED	100	31.00
Int Flooring	12 HARDWOOD	100	13.00
Heating Fuel	4 ELECTRIC	100	1.00
Heating Type	4 FORCED-DUCTED	100	4.00
Air Cond	3 CENTRAL	100	7.00

CATEGORY	UNITS	ADJ
Bedrooms	4.00	0
Baths	3.00	0
Stories	2.00	0
Rooms / Units	1.00	0

BASE RATE ADJ	ADJ
Quality Adjustment	1.2000
Mkt/Design Factor	1.0000
Size Adj.	0.9100
TOTAL ADJUSTED POINTS	126
DEPRECIATION ADJ	ADJ

TYPE	STYLE	CLS	QUA	HX %	NHX %	LOC	% COMP
0102	01	3	04	100.00	0.00	1.00	100

REPL. COST NEW	AYB	EYB	DT	NORM	% GOOD
671,105	1922	2010	R2	12.75	87.25%

SAR	AREA	B	H	P.of B.	EFF. AREA	DPR VALUE
BAS	1,846		X	100	1,846	289,399
FOP	451			30	135	21,164
FUA	1,846		X	95	1,754	274,976
	4,143			3,692	3,735	$585,539

ACREAGE 0.00 PRICE/SF 156.77

0100 Single Family

** VALUE SUBJECT TO CHANGE **

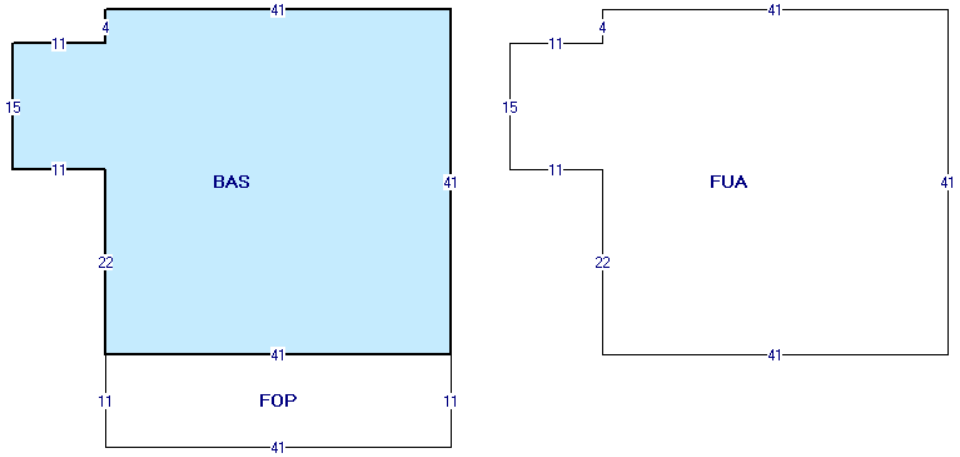

BUILDING: 1 AKA:

SITE ADDRESS: 1718 OSCEOLA ST JACKSONVILLE 32204- 0102 SFR 2 STORY

Duval County Property Appraisers Office Tax Dist USD1

VALUE SUMMARY

PRIMARY VALUATION METHOD	CAMA
BUILDING VALUE	660,739
EXTRA FEATURE VALUE	1,056
TOTAL MARKET LAND VALUE	200,000
MARKET VALUE OF AG LAND	0
TOTAL LAND VALUE AG + COMMON	0
MARKET VALUE	861,795
ASSESSED VALUE	861,795
CAP BASE YEAR	2023
TAXABLE VALUE	811,795
EXEMPTIONS	HB HX
TOTAL EXEMPTIONS VALUE	50,000
SENIOR EXEMPTION VALUE	0
SR/HISTORIC TAXABLE VALUE	N/A

PERMIT NO.	TP	ST.	DESCRIPTION	EST VALUE	ISSUE DATE
11111	ALTS	S	3.5 BATH @ BLDG 1	0	4/10/2024
B23695075	ADDN	C	NEW DECK	33,000	11/27/2023
B23661063	ALTS	C	RENO KITCHEN	117,600	9/28/2023

BUILDING DIMENSIONS

FOP:52,41:=W41 S11 E41 N11 $ BAS:11,41:=N22 W11 N 15 E11 N4 E41 S41 W41 $ FUA:70,41:=N22 W11 N15 E1 1 N4 E41 S41 W41 $.

BUILDING NOTES

LN	VOLUME / YEAR	PAGE / CLERK	DATE OF SALE	IN	QU	VI	RE	SALES PRICE	NOTE AMOUNT	MAC	MAC AMOUNT	GRANTOR	GRANTEE	SALES NOTE
1	20323	00097	6/1/2022	WD	U	I	14	1190800	0	N	0	SCHAFER DANIEL L	LYONS THOMAS B	20220711-LATE FILE HX
2	06813	02254	11/10/1989	WD	U	I	01	128000	0	N	0			

LN	OB/XF CODE	DESCRIPTION	BLD	HX %	NHX %	LENGTH	WIDTH	UNITS	GRADE	FACTOR	UNIT PRICE	ADJ UNIT PRICE	ORIG COND	ACTUAL YEAR	EFF YEAR	YEAR ON ROLL	% COND	OB/XF MKT VALUE
1	FPMR7	Fireplace Masonry	1	100.00	0.00	0	0	1.00	4	100	4,398.75	5,278.50	100	1922	1922		20	1,056
2	DKWR2	Deck Wooden	1	100.00	0.00	14	10	140.00	3	100	30.80	30.80	0	2024	2024	2025	0	0

APPRAISAL DATES	DATE	APPRAISED BY
BUILDING	4/10/2024	RJM
LAND LINES	7/5/2023	MRJ
VALUE REVIEW	6/15/2023	PAH
TRIENNIAL	7/27/2023	MJD
INCOME	6/1/2024	RSL

LT	LN	USE CODE	LAND USE DESCRIPTION	HX %	NHX %	RD	LOC ZONE	FRONT	DEPTH	SIZE FACTOR	UNITS	UNIT TYPE	DT	DPTH FACT	COND FACTOR	UNIT PRICE	ADJ UNIT PRICE	LAND VALUE
C	1	1220	RES/OFFICE	100.00	0.00		RO	0.00	0.00	100.00	8,000.00	S	0	1.00	1.00	25.00	25.00	200,000

LN	DATE	BLD	USER ID	CD	PARCEL NOTES

3-99 56-2S-26E
ACOSTAS S/D WATER LOT 1 BLK 43
RIVERSIDE
LOT 3,N 20FT LOT 4

LYONS THOMAS B
1718 OSCEOLA ST
JACKSONVILLE, FL 32204

2024

R-090561-0000

PRINTED 10/10/2024
BY: pao

Map Id: 6422 517101.02 1.55 1.00 1.00 COMM RIVERSIDE E OF KING ST

BUILDING CHARACTERISTICS

0100 Single Family

** VALUE SUBJECT TO CHANGE **

CATEGORY	TYPE	%	PTS
Exterior Wall	6 VERTICAL SHEET	25	9.00
Exterior Wall	17 C.B. STUCCO	75	29.00
Roof Struct	3 GABLE OR HIP	100	6.00
Roofing Cover	3 ASPH/COMP SHNG	100	4.00
Interior Wall	3 PLASTERED	100	31.00
Int Flooring	12 HARDWOOD	100	13.00
Heating Fuel	4 ELECTRIC	100	1.00
Heating Type	2 CONVECTION	100	2.00
Air Cond	2 WALL UNIT	100	1.00

CATEGORY	UNITS	ADJ
Bedrooms	1.00	0
Baths	1.00	0
Stories	1.00	0
Rooms / Units	1.00	0

BASE RATE ADJ	ADJ
Quality Adjustment	1.2000
Mkt/Design Factor	1.0000
Size Adj.	1.1400
TOTAL ADJUSTED POINTS	155
DEPRECIATION ADJ	ADJ

TYPE	STYLE	CLS	QUA	HX %	NHX %	LOC	% COMP
0106	01	3	04	100.00	0.00	1.00	100

REPL. COST NEW	AYB	EYB	DT	NORM	% GOOD
95,796	1922	2005	R3	21.50	78.50%

SAR	AREA	B	H	P.of B.	EFF. AREA	DPR VALUE
BAS	272		X	100	272	44,758
UGR	322			45	145	23,860
UST	99			40	40	6,582
	693			272	457	$75,200

ACREAGE 0.00 PRICE/SF 164.55

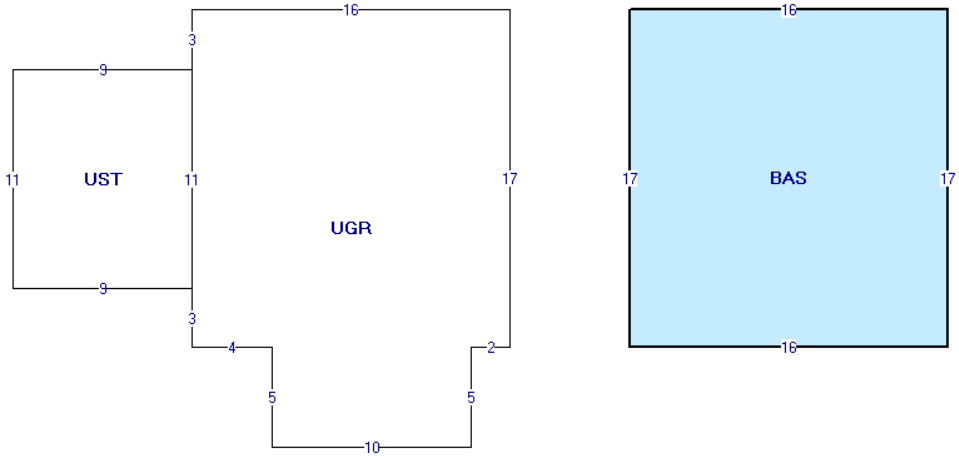

BUILDING: 2 AKA:

SITE ADDRESS: 1718 OSCEOLA ST, JACKSONVILLE 32204- 0106 GARAGE APT

Duval County Property Appraisers Office Tax Dist USD1

VALUE SUMMARY

PRIMARY VALUATION METHOD	CAMA
BUILDING VALUE	660,739
EXTRA FEATURE VALUE	1,056
TOTAL MARKET LAND VALUE	200,000
MARKET VALUE OF AG LAND	0
TOTAL LAND VALUE AG + COMMON	0
MARKET VALUE	861,795
ASSESSED VALUE	861,795
CAP BASE YEAR	2023
TAXABLE VALUE	811,795
EXEMPTIONS	HB HX
TOTAL EXEMPTIONS VALUE	50,000
SENIOR EXEMPTION VALUE	0
SR/HISTORIC TAXABLE VALUE	N/A

PERMIT NO.	TP	ST.	DESCRIPTION	EST VALUE	ISSUE DATE
11111	ALTS	S	3.5 BATH @ BLDG 1	0	4/10/2024
B23695075	ADDN	C	NEW DECK	33,000	11/27/2023
B23661063	ALTS	C	RENO KITCHEN	117,600	9/28/2023

BUILDING DIMENSIONS

UGR:9,17:=N3 N14 E16 S17 W2 S5 W10 N5 W4 $ BAS:31
,17:=N17 E16 S17 W16 $ UST:9,14:=W9 N11 E9 S11 $

.

BUILDING NOTES

LN	VOLUME / YEAR	PAGE / CLERK	DATE OF SALE	IN	QU	VI	RE	SALES PRICE	NOTE AMOUNT	MAC	MAC AMOUNT	GRANTOR	GRANTEE	SALES NOTE
1	20323	00097	6/1/2022	WD	U	I	14	1190800	0	N	0	SCHAFER DANIEL L	LYONS THOMAS B	20220711-LATE FILE HX
2	06813	02254	11/10/1989	WD	U	I	01	128000	0	N	0			

LN	OB/XF CODE	DESCRIPTION	BLD	HX %	NHX %	LENGTH	WIDTH	UNITS	GRADE	FACTOR	UNIT PRICE	ADJ UNIT PRICE	ORIG COND	ACTUAL YEAR	EFF YEAR	YEAR ON ROLL	% COND	OB/XF MKT VALUE

APPRAISAL DATES	DATE	APPRAISED BY
BUILDING	4/10/2024	RJM
LAND LINES	7/5/2023	MRJ
VALUE REVIEW	6/15/2023	PAH
TRIENNIAL	7/27/2023	MJD
INCOME	6/1/2024	RSL

LT	LN	USE CODE	LAND USE DESCRIPTION	HX %	NHX %	RD	LOC ZONE	FRONT	DEPTH	SIZE FACTOR	UNITS	UNIT TYPE	DT	DPTH FACT	COND FACTOR	UNIT PRICE	ADJ UNIT PRICE	LAND VALUE

LN	DATE	BLD	USER ID	CD	PARCEL NOTES

SITE CALCULATIONS - EXIST.

TOTAL LAND AREA: 0.181 ACRES	7,864	SQ FT.
(MAX. 35%) LOT COVERAGE:	2,752	SQ FT.
EXIST. HOUSE FOOTPRINT :	1,846	SQ FT.
EXIST. GARAGE:	426	SQ FT.
EXIST. OPEN PORCH:	451	SQ FT.
TOTAL LOT COVERAGE:	2,723	SQ FT.
% OF LOT COVERAGE:		24.66 %
EX. WOOD DECK W/ STEPS, EX. DRIVEWAY, A/C PAD:		
-TOTAL IMPERVIOUS (4,171 SQ FT)	1,448	SQ FT.
% OF IMPERVIOUS:		53.04 %

TYPICAL SITE PLAN NOTES

1. IT IS THE RESPONSIBILITY OF THE GENERAL CONTRACTOR TO STAKE-OUT THE PERIMETER OF NEW OR EXISTING STRUCTURES & FIELD VERIFY ALL SETBACKS PRIOR TO COMMENCEMENT OF ANY DEMO OR CONSTRUCTION.
2. VERIFY EXIST. FLOOD ZONES & COORDINATE ALL REQUIRED DOCUMENTS/REQUIREMENTS W/ SCOPE OF WORK IF APPLICABLE.
3. VERIFY ALL CODES & RESTRICTIONS WITH STATE & LOCAL MUNICIPALITIES PRIOR TO CONSTRUCTION.
4. G.C. TO VERIFY ANY EXISTING STRUCTURES, SEPTIC, GAS, ETC. DEMOLISH & RELOCATE AS REQUIRED PER LOCAL CODES.
5. ** (WATER, SEWER, & ELECTRICAL) ALL SERVICE PROVIDERS TO BE VERIFIED BY BUILDER**
6. ** THE APPLICANT/OWNER/CONTRACTOR SHALL IMMEDIATELY CONTACT " DUVAL " COUNTY LOT GRADING STAFF SHOULD MODIFICATIONS TO THE DRAINAGE PLAN BE REQUIRED DURING SITE DEVELOPMENT, BASED ON ACTUAL FIELD CONDITIONS.**
7. ** 1 % MINIMUM SLOPE WILL BE PROVIDED FROM BUILDINGS TO DISCHARGE POINT.

HISTORIC PRESERVATION - SITE NOTES

1. THE FRONT SETBACK SHALL REASONABLY MATCH THE SETBACK OF THE IMMEDIATELY ADJACENT HISTORIC STRUCTURES. (VERIFY IN FIELD)

2. THE FINISHED FLOOR HEIGHT SHALL REASONABLY MATCH THE FLOOR HEIGHT OF THE IMMEDIATELY ADJACENT HISTORIC STRUCTURES. (VERIFY IN FIELD)

3. THE DRIVEWAY SHALL BE LIMITED TO NO MORE THAN 10'-0" IN WIDTH UP TO THE FRONT PLANE OF THE HOUSE & SHALL FEATURE EITHER CONCRETE RIBBONS, BRICK PAVERS, OR A COMBINATION OF CONCRETE RIBBONS & PAVERS TO CREATE A SIMULATED RIBBON APPEARANCE. IF A CONCRETE RIBBON DRIVEWAY IS CONSTRUCTED THAN THE AREA BETWEEN THE RIBBONS SHALL BE TWICE THE WIDTH OF THE RIBBONS.

IF BRICK PAVERS ARE USED THE PAVERS SHALL BE NO LARGER THAN A 4"X 8" OR 6"X 10," SHALL BE LAID IN A RUNNING BOND OR HERRINGBONE PATTERN, & SHALL BE A TRADITIONAL BRICK SHAPE & COLOR WITH THE FINAL COLOR CHOICE APPROVED BY THE PLANNING & DEVELOPMENT DEPARTMENT PRIOR TO PURCHASE OR INSTALLATION.

4. 2-STORY CARRIAGE HOUSE - ALL ZONING REQUIREMENTS SET FORTH UNDER THE RIVERSIDE-AVONDALE ZONING OVERLAY MUST BE MET PRIOR TO CONSTRUCTION.

SITE INFO:

PARCEL #:	090561-0000	
ADDRESS:	1718 OSCEOLA STREET JACKSONVILLE, FL 32204	
LEGAL DESCR.:	3-99 56-25-26E ACOSTA'S S/D WATER LOT 1 BLK 43 RIVERSIDE LOT 3N 20FT LOT 4	
BOOK / MAP:	PAGE (20323) PANEL (00097J)	
FLOOD ZONE:	TBD	
ZONING: SETBACKS :	" RO "	
FRONT :	20'-0" (HISTORICAL VARIES)	
SIDES :	5'-0" (HISTORICAL VARIES)	
REAR :	10'-0" (HISTORICAL VARIES)	

SITE CALCULATIONS - NEW

TOTAL LAND AREA: 0.181 ACRES	7,864	SQ FT.
(MAX. 35%) LOT COVERAGE:	2,752	SQ FT.
HOUSE FOOTPRINT/PORCH :	2,291	SQ FT.
NEW HOUSE ADDITION - ELEVATOR:	+21	SQ FT.
NEW TOTAL HOUSE FOOTPRINT:	2,324	SQ FT.
GARAGE FOOTPRINT:	264	SQ FT.
NEW GARAGE ADDITION:	+333	SQ FT.
NEW TOTAL GARAGE:	623	SQ FT.
TOTAL LOT COVERAGE:	2,947	SQ FT.
% OF LOT COVERAGE:		37.47 %
EX. WOOD DECK W/ STEPS, EX. DRIVEWAY, A/C PAD:		
-TOTAL IMPERVIOUS (4,199 SF)	1,252	SQ FT.
% OF IMPERVIOUS:		53.40 %

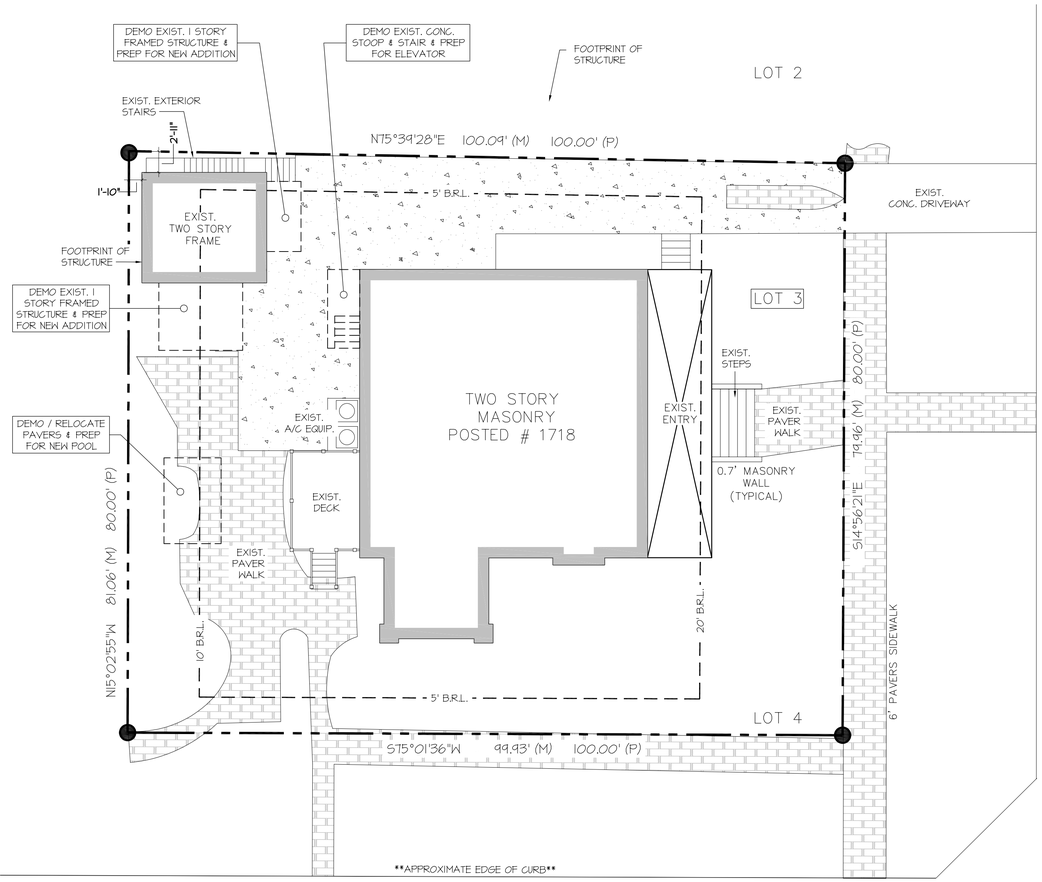

SITE PLAN - EXISTING

SCALE: 1" = 10'-0"

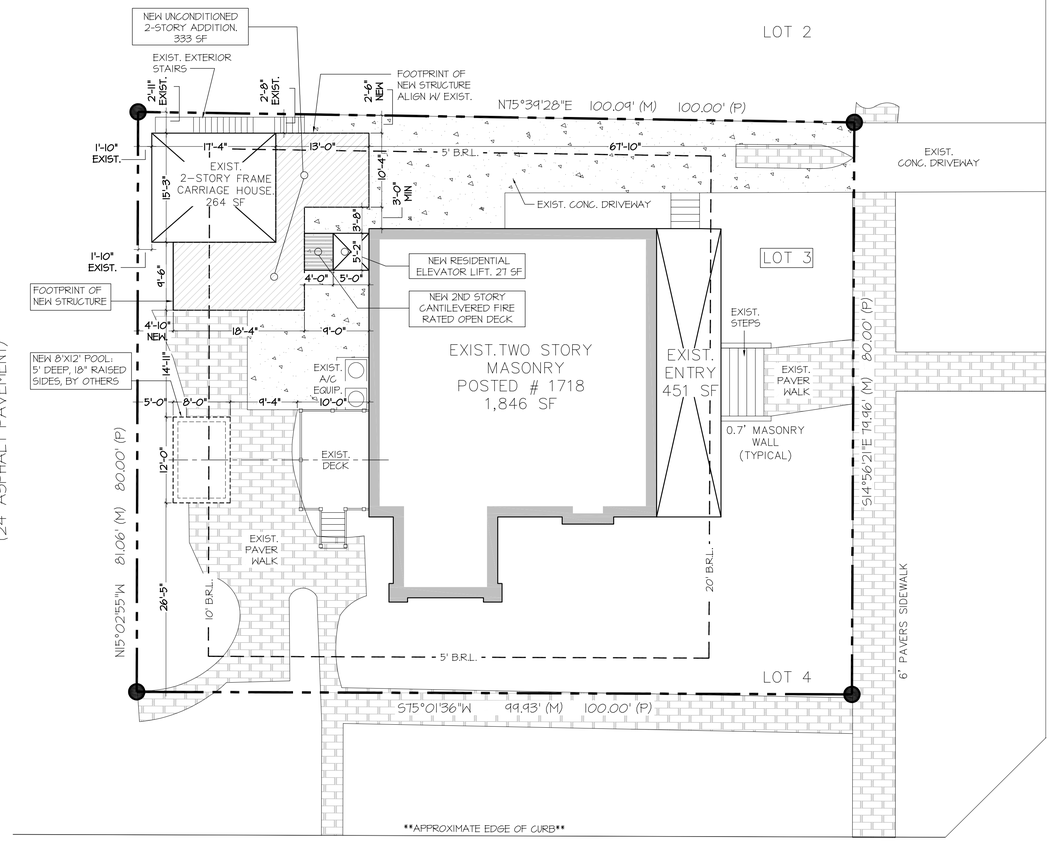

SITE PLAN - NEW

SCALE: 1" = 10'-0"

BUILDING DESIGN CRITERIA TO BE PROVIDED BY ENGINEER OF RECORD

ARCHITECTURE - INC
JAA ARCHITECTURE INC.
2063 OAK STREET
JACKSONVILLE FL 32204
P: (904) 379-5108
E: JOHN@JAAARCHITECTURE.COM
LIC. AR92748

THIS DOCUMENT, ALONG WITH ASSOCIATED DOCUMENTS, IS AN INSTRUMENT OF DESIGNER'S SERVICE FOR THE EXCLUSIVE USE AT THE PROJECT TITLED HEREIN. INFORMATION DERIVED FROM THIS DOCUMENT, AND/OR ASSOCIATED DOCUMENTS, MAY NOT BE USED FOR OTHER WORK(S) OR PROJECT(S) WITHOUT THE EXPRESS WRITTEN PERMISSION OF THE DESIGNER.

TO THE BEST OF THE ARCHITECT'S KNOWLEDGE, THE PLANS AND SPECIFICATIONS COMPLY WITH THE APPLICABLE MINIMUM BUILDING CODES AND THE APPLICABLE FIRE-SAFETY STANDARDS AS DETERMINED BY THE LOCAL AUTHORITY IN ACCORDANCE WITH THIS SECTION AND CHAPTER 633, FLORIDA STATUTES. TO THE BEST OF THE ARCHITECT'S KNOWLEDGE, THE SPACE HAS BEEN DESIGNED TO MEET THE REQUIREMENTS OF THE FLORIDA BUILDING CODE 8TH EDITION 2023 AND THE 8TH EDITION OF THE FLORIDA FIRE PREVENTION CODE BASED ON NFPA 1 FIRE CODE 2023 EDITION & NFPA 101 LIFE SAFETY CODE 2021, 8TH EDITION.

" NEW 2-STORY ADDITION " LYONS RESIDENCE

1718 OSCEOLA STREET
JACKSONVILLE, FLORIDA 32204

THIS ITEM HAS BEEN DIGITALLY SEALED BY JOHN ALLMAND, ARCHITECT, ON 09/2025 USING A DIGITAL SIGNATURE. PRINTED COPIES OF THIS DOCUMENT ARE NOT CONSIDERED SIGNED AND SEALED AND SIGNATURE MUST BE VERIFIED ON ANY ELECTRONIC COPIES. APPROVED CONSTRUCTION DOCUMENTS ON SITE SHALL BEAR THE "APPROVED" SEAL FROM THE AHJ.

REVISIONS

#	DATE	DESCRIPTION
1		
2		
3		
4		
5		
6		
7		

STATE OF FLORIDA · JOHN D. ALLMAND · REGISTERED ARCHITECT

NOT FOR CONSTRUCTION

DATE: 09.22.2025

PRJCT #: 25.0177

SHEET

A0.1

HPC

JHPC - ELEVATION NOTES

1. THE FRONT ENTRY DOOR SHALL FEATURE CLEAR GLASS (NO DECORATIVE ETCHING, FROSTING, OR LEADING).

2. THE EAVES SHALL BE A MINIMUM OF 18" IN SIZE & SHALL FEATURE A TRADITIONAL BEAD BOARD APPEARANCE. THE MATERIALS USED FOR THE SOFFITS & FASCIA SHALL BE EITHER A WOOD OR CEMENTITIOUS SIDING PRODUCT.

3. THE WINDOWS SHALL FEATURE EXTERIOR, RAISED-PROFILE MUNTIN GRIDS & EQUAL SIZE SASHES. ALL WINDOWS SHALL BE RECESSED WITHIN THE WALL PLANE & TRIMMED OUT IN A TRADITIONAL MANNER INCLUDING THE PRESENCE OF CROWN MOLDING & A WINDOW SILL. ANY WINDOW PAIRINGS SHALL BE DIVIDED BY A TRADITIONAL MULLION.

4. A STUCCO PARGE FINISH SHALL BE APPLIED TO THE CONCRETE BLOCK PIERS OR THE PIERS SHALL BE CONSTRUCTED WITH A TRADITIONAL RUSTICATED BLOCK OR MASONRY MATERIAL (BRICK OR SPLIT-FACE BLOCK) WITH THE FINAL MATERIAL APPROVED BY STAFF PRIOR TO CONSTRUCTION. FRAMED LATTICE PANELS SHALL BE INSTALLED & RECESSED IN BETWEEN THE PIERS. (APPLIES TO CHEEK WALLS)

5. THE RAILING SYSTEM SHALL BE MADE OF WOOD, SET BELOW THE CAP OF THE PIERS, AND FEATURE SQUARE 2" X 2" SPINDLES SET IN BETWEEN AN UPPER & LOWER RAILING WITH NO EXPOSED ENDS.

6. ALL CEMENTITIOUS SIDING SHALL HAVE A SMOOTH APPEARANCE.

DECK SYSTEM - 1 HOUR FIRE RATING: ALL WOOD MEMBERS IN DECKING SYSTEM TO BE (FIRE-RETARDANT-TREATED (FRT) WOOD, U.N.O. BY STRUCTURAL ENGINEER

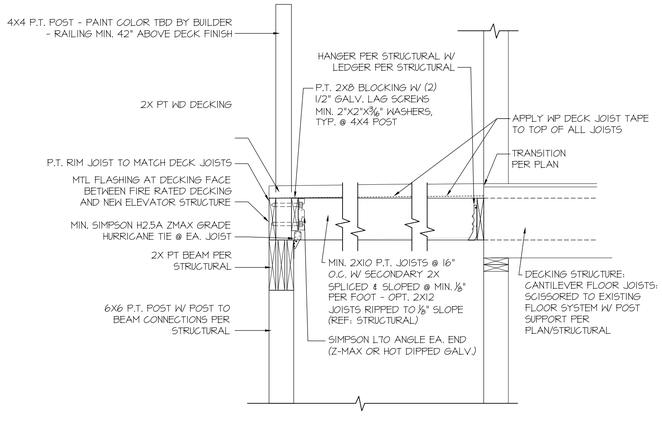

1 / A9 DECKING SECTION
3/4" = 1'-0"

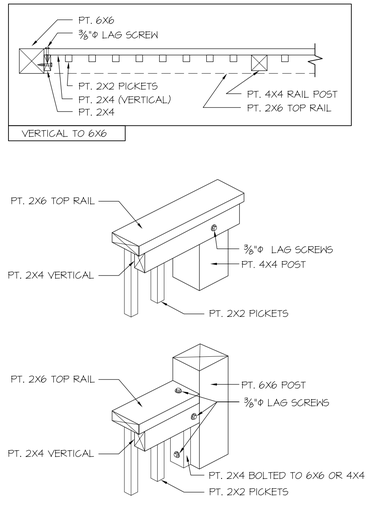

2 / A9 PARTIAL GUARD RAIL DETAIL TYP.
3/4" = 1'-0"

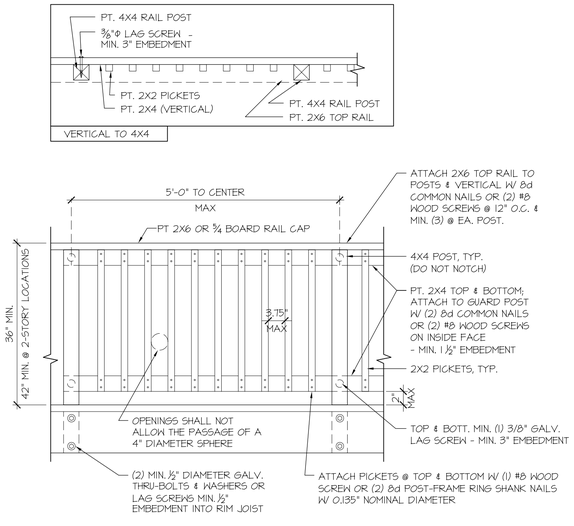

3 / A9 PARTIAL GUARD RAIL ELEVATION TYP.
3/4" = 1'-0"

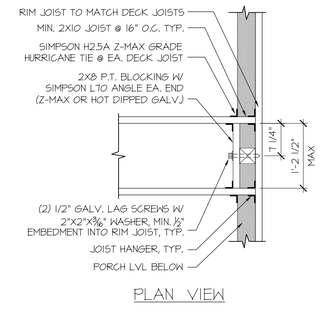

4 / A9 GUARDRAIL POST CONNECTION, TYP.
3/4" = 1'-0"

ARCHITECTURE - INC
JAA ARCHITECTURE INC.
2063 OAK STREET
JACKSONVILLE FL 32204
P: (904) 379-5108
E: JOHN@JAAARCHITECTURE.COM
LIC. AR92748

THIS DOCUMENT, ALONG WITH ASSOCIATED DOCUMENTS, IS AN INSTRUMENT OF DESIGNER'S SERVICE FOR THE EXCLUSIVE USE AT THE PROJECT TITLED HEREIN. INFORMATION DERIVED FROM THIS DOCUMENT, AND/OR ASSOCIATED DOCUMENTS, MAY NOT BE USED FOR OTHER WORK(S) OR PROJECT(S) WITHOUT THE EXPRESS WRITTEN PERMISSION OF THE DESIGNER.

TO THE BEST OF THE ARCHITECT'S KNOWLEDGE, THE PLANS AND SPECIFICATIONS COMPLY WITH THE APPLICABLE MINIMUM BUILDING CODES AND THE APPLICABLE FIRE-SAFETY STANDARDS AS DETERMINED BY THE LOCAL AUTHORITY IN ACCORDANCE WITH THIS SECTION AND CHAPTER 633, FLORIDA STATUTES. TO THE BEST OF THE ARCHITECT'S KNOWLEDGE, THE SPACE HAS BEEN DESIGNED TO MEET THE REQUIREMENTS OF THE FLORIDA BUILDING CODE 8TH EDITION 2023 AND THE 8TH EDITION OF THE FLORIDA FIRE PREVENTION CODE BASED ON NFPA 1 FIRE CODE 2023 EDITION & NFPA 101 LIFE SAFETY CODE 2021, 8TH EDITION.

" NEW 2-STORY ADDITION "
LYONS RESIDENCE
1718 OSCEOLA STREET
JACKSONVILLE, FLORIDA 32204

THIS ITEM HAS BEEN DIGITALLY SEALED BY JOHN ALLMAND, ARCHITECT, ON 09/22/25. USING A DIGITAL SIGNATURE. PRINTED COPIES OF THIS DOCUMENT ARE NOT CONSIDERED SIGNED AND SEALED AND SIGNATURE MUST BE VERIFIED ON ANY ELECTRONIC COPIES. APPROVED CONSTRUCTION DOCUMENTS ON SITE SHALL BEAR THE "APPROVED" SEAL FROM THE AHJ.

REVISIONS

#	DATE	DESCRIPTION
1		
2		
3		
4		
5		
6		
7		

STATE OF FLORIDA — JOHN ALLMAND — LICENSE — REGISTERED ARCHITECT

NOT FOR CONSTRUCTION

DATE: 09.22.2025

PRJCT #: 25.0177

SHEET

A9

HPC

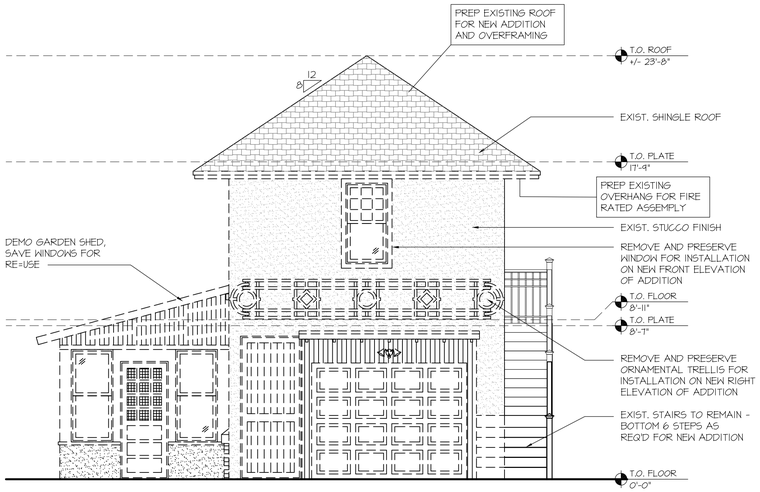

1 / A4 FRONT ELEVATION - GARAGE - DEMO
1/4" = 1'-0"

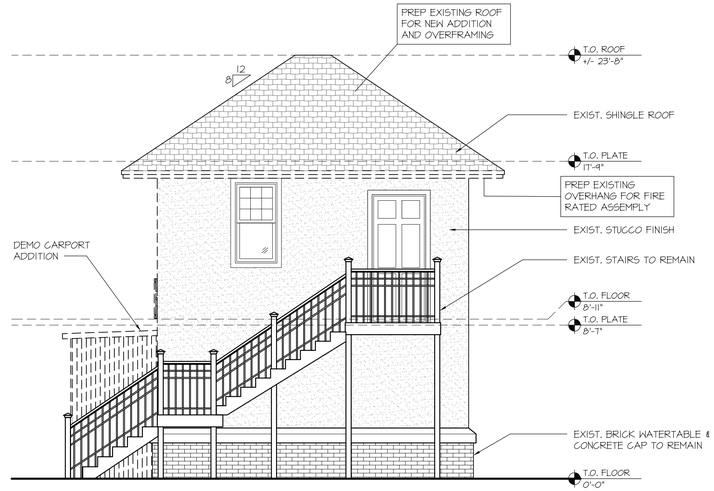

2 / A4 RIGHT ELEVATION - GARAGE - DEMO
1/4" = 1'-0"

GENERAL DEMOLITION NOTES

1. REMODELING AND/OR ALTERATIONS OF AN EXISTING BUILDING REQUIRES THAT CERTAIN ASSUMPTIONS BE MADE REGARDING EXISTING CONDITIONS, SOME WHICH MAY NOT BE VERIFIABLE WITH OUT DESTROYING OTHERWISE ADEQUATE OR SERVICEABLE PORTIONS OF THE BUILDING. THE ARCHITECT AND THE ARCHITECT'S CONSULTANTS ARE NOT RESPONSIBLE FOR CONDITIONS DISCOVERED DURING CONSTRUCTION THAT DIFFER FROM THOSE INDICATED. THE CONTRACTOR, UPON MAKING SUCH A DISCOVERY, SHALL IMMEDIATELY NOTIFY THE ARCHITECT AND OBTAIN A CLARIFICATION PRIOR TO PROCEEDING WITH THE WORK IN QUESTION.

2. PATCH AND REPLACE DAMAGED CEILING AS NECESSARY.

3. ITEMS TO BE RELOCATED OR DEMOLISHED ARE ILLUSTRATED AS DASHED LINES AND ARE NOTED.

4. WHERE DOORS, WALLS, AND OTHER STRUCTURES ARE REMOVED, PATCH ADJACENT WALL AND FLOOR SURFACES TO MATCH THE EXISTING MATERIAL.

5. NEATLY CUT OPENINGS AND HOLES PLUMB, SQUARE, AND TRUE TO DIMENSIONS REQUIRED.

6. ITEMS INDICATED TO BE DEMOLISHED SHALL BE DISPOSED OF LEGALLY.

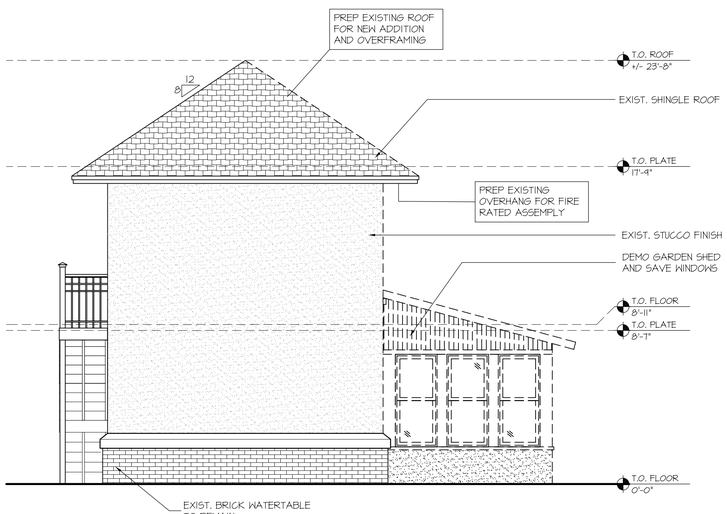

3 / A4 REAR ELEVATION - GARAGE - DEMO
1/4" = 1'-0"

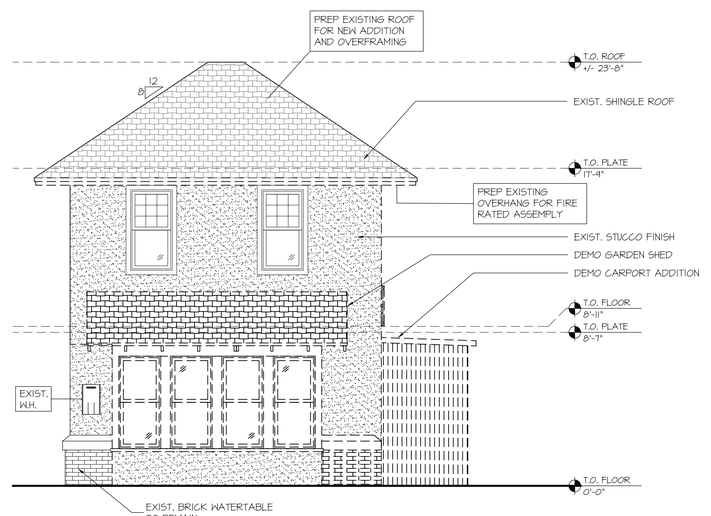

4 / A4 LEFT ELEVATION - GARAGE - DEMO
1/4" = 1'-0"

ARCHITECTURE - INC
JAA ARCHITECTURE INC.
2063 OAK STREET
JACKSONVILLE FL 32204
P: (904) 379-5108
E: JOHN@JAAARCHITECTURE.COM
LIC. AR92748

THIS DOCUMENT, ALONG WITH ASSOCIATED DOCUMENTS, IS AN INSTRUMENT OF DESIGNER'S SERVICE FOR THE EXCLUSIVE USE AT THE PROJECT TITLED HEREIN. INFORMATION DERIVED FROM THIS DOCUMENT, AND/OR ASSOCIATED DOCUMENTS, MAY NOT BE USED FOR OTHER WORK(S) OR PROJECT(S) WITHOUT THE EXPRESS WRITTEN PERMISSION OF THE DESIGNER.

TO THE BEST OF THE ARCHITECT'S KNOWLEDGE, THE PLANS AND SPECIFICATIONS COMPLY WITH THE APPLICABLE MINIMUM BUILDING CODES AND THE APPLICABLE FIRE-SAFETY STANDARDS AS DETERMINED BY THE LOCAL AUTHORITY IN ACCORDANCE WITH THIS SECTION AND CHAPTER 633, FLORIDA STATUTES. TO THE BEST OF THE ARCHITECT'S KNOWLEDGE, THE SPACE HAS BEEN DESIGNED TO MEET THE REQUIREMENTS OF THE FLORIDA BUILDING CODE 8TH EDITION 2023 AND THE 8TH EDITION OF THE FLORIDA FIRE PREVENTION CODE BASED ON NFPA 1 FIRE CODE 2023 EDITION & NFPA 101 LIFE SAFETY CODE 2021, 8TH EDITION.

" NEW 2-STORY ADDITION "
LYONS RESIDENCE

1718 OSCEOLA STREET
JACKSONVILLE, FLORIDA 32204

THIS ITEM HAS BEEN DIGITALLY SEALED BY JOHN ALLMAND, ARCHITECT, ON 09/2025 USING A DIGITAL SIGNATURE. PRINTED COPIES OF THIS DOCUMENT ARE NOT CONSIDERED SIGNED AND SEALED AND SIGNATURE MUST BE VERIFIED ON ANY ELECTRONIC COPIES. APPROVED CONSTRUCTION DOCUMENTS ON SITE SHALL BEAR THE "APPROVED" SEAL FROM THE AHJ.

REVISIONS

#	DATE	DESCRIPTION
1		
2		
3		
4		
5		
6		
7		

STATE OF FLORIDA
JOHN ANDERSON ALLMAND
LICENSE NO. AR92748
REGISTERED ARCHITECT

NOT FOR CONSTRUCTION

DATE: 09.12.2025

PRJCT #: 25.0177

SHEET

A4

SCHEMATIC DESIGN

JHPC - ELEVATION NOTES

1. THE FRONT ENTRY DOOR SHALL FEATURE CLEAR GLASS (NO DECORATIVE ETCHING, FROSTING, OR LEADING).

2. THE EAVES SHALL BE A MINIMUM OF 18" IN SIZE & SHALL FEATURE A TRADITIONAL BEAD BOARD APPEARANCE. THE MATERIALS USED FOR THE SOFFITS & FASCIA SHALL BE EITHER A WOOD OR CEMENTITIOUS SIDING PRODUCT.

3. THE WINDOWS SHALL FEATURE EXTERIOR, RAISED-PROFILE MUNTIN GRIDS & EQUAL SIZE SASHES. ALL WINDOWS SHALL BE RECESSED WITHIN THE WALL PLANE & TRIMMED OUT IN A TRADITIONAL MANNER INCLUDING THE PRESENCE OF CROWN MOLDING & A WINDOW SILL. ANY WINDOW PAIRINGS SHALL BE DIVIDED BY A TRADITIONAL MULLION.

4. A STUCCO PARGE FINISH SHALL BE APPLIED TO THE CONCRETE BLOCK PIERS OR THE PIERS SHALL BE CONSTRUCTED WITH A TRADITIONAL RUSTICATED BLOCK OR MASONRY MATERIAL (BRICK OR SPLIT-FACE BLOCK) WITH THE FINAL MATERIAL APPROVED BY STAFF PRIOR TO CONSTRUCTION. FRAMED LATTICE PANELS SHALL BE INSTALLED & RECESSED IN BETWEEN THE PIERS. (APPLIES TO CHEEK WALLS)

5. THE RAILING SYSTEM SHALL BE MADE OF WOOD, SET BELOW THE CAP OF THE PIERS, AND FEATURE SQUARE 2" X 2" SPINDLES SET IN BETWEEN AN UPPER & LOWER RAILING WITH NO EXPOSED ENDS.

6. ALL CEMENTITIOUS SIDING SHALL HAVE A SMOOTH APPEARANCE.

ELEVATION NOTES

CARRIAGE HOUSE DEMOLITION DETAILS ARE SHOWN ON SHEET A4.

THIS SHEET EXPLAINS HOW THE MAIN STRUCTURE IS TO BE PARTIALLY DEMO'D FOR THE ADDITION OF AN EXTERIOR ELEVATOR AT THE REAR OF THE HOUSE THAT WILL PROVIDE ACCESS FROM THE DRIVEWAY TO THE MAIN LEVEL OF THE HOUSE, THE SECOND FLOOR OF THE CARRIAGE HOUSE AND THE SECOND FLOOR OF THE MAIN HOUSE.

1 / A5 FRONT ELEVATION - EXISTING
1/4" = 1'-0"

2 / A5 RIGHT ELEVATION - EXISTING
1/4" = 1'-0"

ARCHITECTURE-INC
JAA ARCHITECTURE INC.
2063 OAK STREET
JACKSONVILLE FL 32204
P: (904) 379-5108
E: JOHN@JAAARCHITECTURE.COM
LIC. AR92748

THIS DOCUMENT, ALONG WITH ASSOCIATED DOCUMENTS, IS AN INSTRUMENT OF DESIGNER'S SERVICE FOR THE EXCLUSIVE USE AT THE PROJECT TITLED HEREIN. INFORMATION DERIVED FROM THIS DOCUMENT, AND/OR ASSOCIATED DOCUMENTS, MAY NOT BE USED FOR OTHER WORK(S) OR PROJECT(S) WITHOUT THE EXPRESS WRITTEN PERMISSION OF THE DESIGNER.

TO THE BEST OF THE ARCHITECT'S KNOWLEDGE, THE PLANS AND SPECIFICATIONS COMPLY WITH THE APPLICABLE MINIMUM BUILDING CODES AND THE APPLICABLE FIRE-SAFETY STANDARDS AS DETERMINED BY THE LOCAL AUTHORITY IN ACCORDANCE WITH THIS SECTION AND CHAPTER 633, FLORIDA STATUTES. TO THE BEST OF THE ARCHITECT'S KNOWLEDGE, THE SPACE HAS BEEN DESIGNED TO MEET THE REQUIREMENTS OF THE FLORIDA BUILDING CODE 8TH EDITION 2023 AND THE 8TH EDITION OF THE FLORIDA FIRE PREVENTION CODE BASED ON NFPA 1 FIRE CODE 2023 EDITION & NFPA 101 LIFE SAFETY CODE 2021, 8TH EDITION.

" NEW 2-STORY ADDITION " LYONS RESIDENCE

1718 OSCEOLA STREET
JACKSONVILLE, FLORIDA 32204

THIS ITEM HAS BEEN DIGITALLY SEALED BY JOHN ALLMAND, ARCHITECT, ON 09/2025 USING A DIGITAL SIGNATURE. PRINTED COPIES OF THIS DOCUMENT ARE NOT CONSIDERED SIGNED AND SEALED AND SIGNATURE MUST BE VERIFIED ON ANY ELECTRONIC COPIES. APPROVED CONSTRUCTION DOCUMENTS ON SITE SHALL BEAR THE "APPROVED" SEAL FROM THE AHJ.

REVISIONS

#	DATE	DESCRIPTION
1		
2		
3		
4		
5		
6		
7		

STATE OF FLORIDA · JOHN ALLMAND · REGISTERED ARCHITECT

NOT FOR CONSTRUCTION

DATE: 09.12.2025

PRJCT #: 25.0177

SHEET

A5

SCHEMATIC DESIGN

JHPC - ELEVATION NOTES

1. THE FRONT ENTRY DOOR SHALL FEATURE CLEAR GLASS (NO DECORATIVE ETCHING, FROSTING, OR LEADING).

2. THE EAVES SHALL BE A MINIMUM OF 18" IN SIZE & SHALL FEATURE A TRADITIONAL BEAD BOARD APPEARANCE. THE MATERIALS USED FOR THE SOFFITS & FASCIA SHALL BE EITHER A WOOD OR CEMENTITIOUS SIDING PRODUCT.

3. THE WINDOWS SHALL FEATURE EXTERIOR, RAISED-PROFILE MUNTIN GRIDS & EQUAL SIZE SASHES. ALL WINDOWS SHALL BE RECESSED WITHIN THE WALL PLANE & TRIMMED OUT IN A TRADITIONAL MANNER INCLUDING THE PRESENCE OF CROWN MOLDING & A WINDOW SILL. ANY WINDOW PAIRINGS SHALL BE DIVIDED BY A TRADITIONAL MULLION.

4. A STUCCO PARGE FINISH SHALL BE APPLIED TO THE CONCRETE BLOCK PIERS OR THE PIERS SHALL BE CONSTRUCTED WITH A TRADITIONAL RUSTICATED BLOCK OR MASONRY MATERIAL (BRICK OR SPLIT-FACE BLOCK) WITH THE FINAL MATERIAL APPROVED BY STAFF PRIOR TO CONSTRUCTION. FRAMED LATTICE PANELS SHALL BE INSTALLED & RECESSED IN BETWEEN THE PIERS. (APPLIES TO CHEEK WALLS)

5. THE RAILING SYSTEM SHALL BE MADE OF WOOD, SET BELOW THE CAP OF THE PIERS, AND FEATURE SQUARE 2" X 2" SPINDLES SET IN BETWEEN AN UPPER & LOWER RAILING WITH NO EXPOSED ENDS.

6. ALL CEMENTITIOUS SIDINGS SHALL HAVE A SMOOTH APPEARANCE.

ELEVATION NOTES

CARRIAGE HOUSE DEMOLITION DETAILS ARE SHOWN ON SHEET A4.

THIS SHEET EXPLAINS HOW THE MAIN STRUCTURE IS TO BE PARTIALLY DEMO'D FOR THE ADDITION OF AN EXTERIOR ELEVATOR AT THE REAR OF THE HOUSE THAT WILL PROVIDE ACCESS FROM THE DRIVEWAY TO THE MAIN LEVEL OF THE HOUSE, THE SECOND FLOOR OF THE CARRIAGE HOUSE AND THE SECOND FLOOR OF THE MAIN HOUSE.

1 A6 REAR ELEVATION - EXISTING
1/4" = 1'-0"

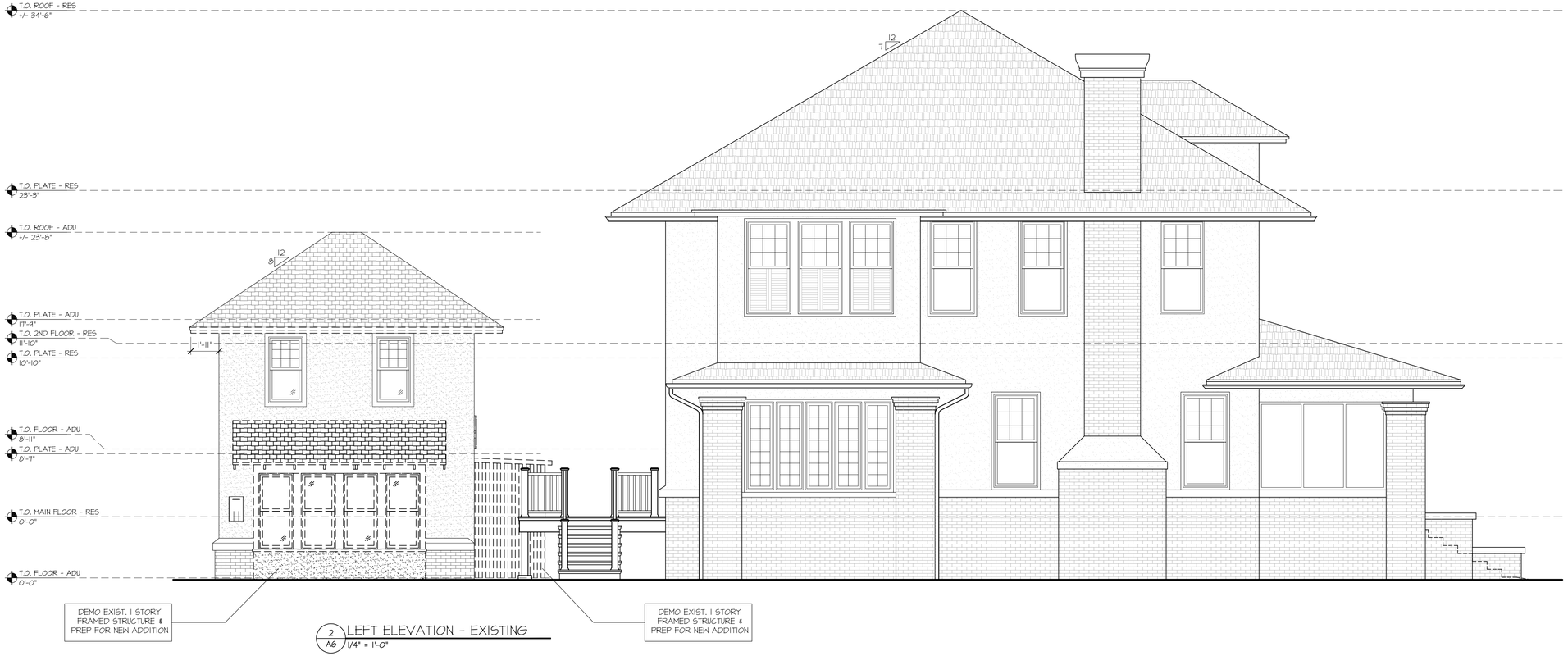

2 A6 LEFT ELEVATION - EXISTING
1/4" = 1'-0"

ARCHITECTURE - INC
JAA ARCHITECTURE INC.
2063 OAK STREET
JACKSONVILLE FL 32204
P: (904) 379-5108
E: JOHN@JAAARCHITECTURE.COM
LIC. AR92748

THIS DOCUMENT, ALONG WITH ASSOCIATED DOCUMENTS, IS AN INSTRUMENT OF DESIGNER'S SERVICE FOR THE EXCLUSIVE USE AT THE PROJECT TITLED HEREIN. INFORMATION DERIVED FROM THIS DOCUMENT, AND/OR ASSOCIATED DOCUMENTS, MAY NOT BE USED FOR OTHER WORK(S) OR PROJECT(S) WITHOUT THE EXPRESS WRITTEN PERMISSION OF THE DESIGNER.

TO THE BEST OF THE ARCHITECT'S KNOWLEDGE, THE PLANS AND SPECIFICATIONS COMPLY WITH THE APPLICABLE MINIMUM BUILDING CODES AND THE APPLICABLE FIRE-SAFETY STANDARDS AS DETERMINED BY THE LOCAL AUTHORITY IN ACCORDANCE WITH THIS SECTION AND CHAPTER 633, FLORIDA STATUTES. TO THE BEST OF THE ARCHITECT'S KNOWLEDGE, THE SPACE HAS BEEN DESIGNED TO MEET THE REQUIREMENTS OF THE FLORIDA BUILDING CODE 8TH EDITION 2023 AND THE 8TH EDITION OF THE FLORIDA FIRE PREVENTION CODE BASED ON NFPA 1 FIRE CODE 2023 EDITION & NFPA 101 LIFE SAFETY CODE 2021, 8TH EDITION.

" NEW 2-STORY ADDITION "
LYONS RESIDENCE

1718 OSCEOLA STREET
JACKSONVILLE, FLORIDA 32204

THIS ITEM HAS BEEN DIGITALLY SEALED BY JOHN ALLMAND, ARCHITECT, ON 09/2025 USING A DIGITAL SIGNATURE. PRINTED COPIES OF THIS DOCUMENT ARE NOT CONSIDERED SIGNED AND SEALED AND SIGNATURE MUST BE VERIFIED ON ANY ELECTRONIC COPIES. APPROVED CONSTRUCTION DOCUMENTS ON SITE SHALL BEAR THE "APPROVED" SEAL FROM THE AHJ.

REVISIONS

#	DATE	DESCRIPTION
1		
2		
3		
4		
5		
6		
7		

STATE OF FLORIDA · JOHN ANDERSON ALLMAND · REGISTERED ARCHITECT

NOT FOR CONSTRUCTION

DATE: 09.12.2025

PRJCT #: 25.0177

SHEET

A6

SCHEMATIC DESIGN

JHPC - ELEVATION NOTES

1. THE FRONT ENTRY DOOR SHALL FEATURE CLEAR GLASS (NO DECORATIVE ETCHING, FROSTING, OR LEADING).

2. THE EAVES SHALL BE A MINIMUM OF 18" IN SIZE & SHALL FEATURE A TRADITIONAL BEAD BOARD APPEARANCE. THE MATERIALS USED FOR THE SOFFITS & FASCIA SHALL BE EITHER A WOOD OR CEMENTITIOUS SIDING PRODUCT.

3. THE WINDOWS SHALL FEATURE EXTERIOR, RAISED-PROFILE MUNTIN GRIDS & EQUAL SIZE SASHES. ALL WINDOWS SHALL BE RECESSED WITHIN THE WALL PLANE & TRIMMED OUT IN A TRADITIONAL MANNER INCLUDING THE PRESENCE OF CROWN MOLDING & A WINDOW SILL. ANY WINDOW PAIRINGS SHALL BE DIVIDED BY A TRADITIONAL MULLION.

4. A STUCCO PARGE FINISH SHALL BE APPLIED TO THE CONCRETE BLOCK PIERS OR THE PIERS SHALL BE CONSTRUCTED WITH A TRADITIONAL RUSTICATED BLOCK OR MASONRY MATERIAL (BRICK OR SPLIT-FACE BLOCK) WITH THE FINAL MATERIAL APPROVED BY STAFF PRIOR TO CONSTRUCTION. FRAMED LATTICE PANELS SHALL BE INSTALLED & RECESSED IN BETWEEN THE PIERS. (APPLIES TO CHEEK WALLS)

5. THE RAILING SYSTEM SHALL BE MADE OF WOOD, SET BELOW THE CAP OF THE PIERS, AND FEATURE SQUARE 2" X 2" SPINDLES SET IN BETWEEN AN UPPER & LOWER RAILING WITH NO EXPOSED ENDS.

6. ALL CEMENTITIOUS SIDING SHALL HAVE A SMOOTH APPEARANCE.

ELEVATION NOTES

ELEVATIONS (A7, A8) FOR NEW ADDITION ARE BASED ON THE FINISHED FLOOR OF THE CARRIAGE HOUSE = FIRST STOP OF THE PERSONAL ELEVATOR.

FINISHED FLOOR / 3" ABV GRADE =	0'-0"
STOP ONE, MAIN HOUSE, LEVEL ONE =	+4'-2"
STOP TWO, CARRIAGE HOUSE, LEVEL TWO =	+8'-9 1/2"
STOP THREE, MAIN HOUSE LEVEL, TWO =	+16'-0"

ALL MEASUREMENTS TO BE VERIFIED BY GC IN FIELD PRIOR TO ORDERING MATERIALS / PRODUCTS

1 / A7 FRONT ELEVATION - NEW
1/4" = 1'-0"

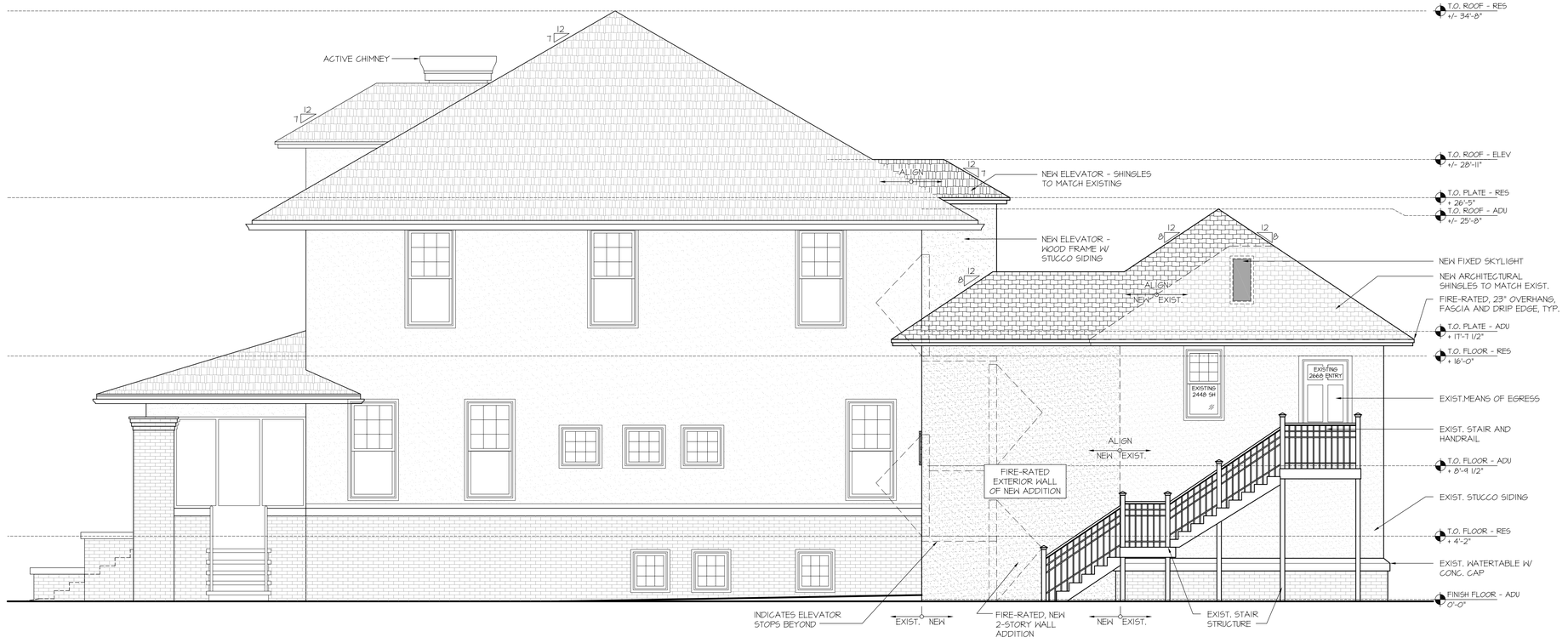

2 / A7 RIGHT ELEVATION - NEW
1/4" = 1'-0"

ARCHITECTURE - INC
JAA ARCHITECTURE INC.
2063 OAK STREET
JACKSONVILLE FL 32204
P: (904) 379-5108
E: JOHN@JAAARCHITECTURE.COM
LIC. AR92748

THIS DOCUMENT, ALONG WITH ASSOCIATED DOCUMENTS, IS AN INSTRUMENT OF DESIGNER'S SERVICE FOR THE EXCLUSIVE USE AT THE PROJECT TITLED HEREIN. INFORMATION DERIVED FROM THIS DOCUMENT, AND/OR ASSOCIATED DOCUMENTS, MAY NOT BE USED FOR OTHER WORK(S) OR PROJECT(S) WITHOUT THE EXPRESS WRITTEN PERMISSION OF THE DESIGNER.

TO THE BEST OF THE ARCHITECT'S KNOWLEDGE, THE PLANS AND SPECIFICATIONS COMPLY WITH THE APPLICABLE MINIMUM BUILDING CODES AND THE APPLICABLE FIRE-SAFETY STANDARDS AS DETERMINED BY THE LOCAL AUTHORITY IN ACCORDANCE WITH THIS SECTION AND CHAPTER 633, FLORIDA STATUTES. TO THE BEST OF THE ARCHITECT'S KNOWLEDGE, THE SPACE HAS BEEN DESIGNED TO MEET THE REQUIREMENTS OF THE FLORIDA BUILDING CODE 8TH EDITION 2023 AND THE 8TH EDITION OF THE FLORIDA FIRE PREVENTION CODE BASED ON NFPA 1 FIRE CODE 2023 EDITION & NFPA 101 LIFE SAFETY CODE 2021, 8TH EDITION.

" NEW 2-STORY ADDITION "
LYONS RESIDENCE

1718 OSCEOLA STREET
JACKSONVILLE, FLORIDA 32204

THIS ITEM HAS BEEN DIGITALLY SEALED BY JOHN ALLMAND, ARCHITECT, ON 09/2025. USING A DIGITAL SIGNATURE. PRINTED COPIES OF THIS DOCUMENT ARE NOT CONSIDERED SIGNED AND SEALED AND SIGNATURE MUST BE VERIFIED ON ANY ELECTRONIC COPIES. APPROVED CONSTRUCTION DOCUMENTS ON SITE SHALL BEAR THE "APPROVED" SEAL FROM THE AHJ.

REVISIONS

#	DATE	DESCRIPTION
1		
2		
3		
4		
5		
6		
7		

STATE OF FLORIDA
JOHN ANDERSON ALLMAND
LICENSE
REGISTERED ARCHITECT

NOT FOR CONSTRUCTION

DATE: 09.12.2025

PRJCT #: 25.0177

SHEET

A7

SCHEMATIC DESIGN

JHPC - ELEVATION NOTES

1. THE FRONT ENTRY DOOR SHALL FEATURE CLEAR GLASS (NO DECORATIVE ETCHING, FROSTING, OR LEADING).

2. THE EAVES SHALL BE A MINIMUM OF 18" IN SIZE & SHALL FEATURE A TRADITIONAL BEAD BOARD APPEARANCE. THE MATERIALS USED FOR THE SOFFITS & FASCIA SHALL BE EITHER A WOOD OR CEMENTITIOUS SIDING PRODUCT.

3. THE WINDOWS SHALL FEATURE EXTERIOR, RAISED-PROFILE MUNTIN GRIDS & EQUAL SIZE SASHES. ALL WINDOWS SHALL BE RECESSED WITHIN THE WALL PLANE & TRIMMED OUT IN A TRADITIONAL MANNER INCLUDING THE PRESENCE OF CROWN MOLDING & A WINDOW SILL. ANY WINDOW PAIRINGS SHALL BE DIVIDED BY A TRADITIONAL MULLION.

4. A STUCCO PARGE FINISH SHALL BE APPLIED TO THE CONCRETE BLOCK PIERS OR THE PIERS SHALL BE CONSTRUCTED WITH A TRADITIONAL RUSTICATED BLOCK OR MASONRY MATERIAL (BRICK OR SPLIT-FACE BLOCK) WITH THE FINAL MATERIAL APPROVED BY STAFF PRIOR TO CONSTRUCTION. FRAMED LATTICE PANELS SHALL BE INSTALLED & RECESSED IN BETWEEN THE PIERS. (APPLIES TO CHEEK WALLS)

5. THE RAILING SYSTEM SHALL BE MADE OF WOOD, SET BELOW THE CAP OF THE PIERS, AND FEATURE SQUARE 2" X 2" SPINDLES SET IN BETWEEN AN UPPER & LOWER RAILING WITH NO EXPOSED ENDS.

6. ALL CEMENTITIOUS SIDING SHALL HAVE A SMOOTH APPEARANCE.

ELEVATION NOTES

ELEVATIONS (A7, A8) FOR NEW ADDITION ARE BASED ON THE FINISHED FLOOR OF THE CARRIAGE HOUSE = FIRST STOP OF THE PERSONAL ELEVATOR.

FINISHED FLOOR / 3" ABV GRADE =	0'-0"
STOP ONE, MAIN HOUSE, LEVEL ONE =	+4'-2"
STOP TWO, CARRIAGE HOUSE, LEVEL TWO =	+8'-4 1/2"
STOP THREE, MAIN HOUSE LEVEL, TWO =	+16'-0"

ALL MEASUREMENTS TO BE VERIFIED BY GC IN FIELD PRIOR TO ORDERING MATERIALS / PRODUCTS

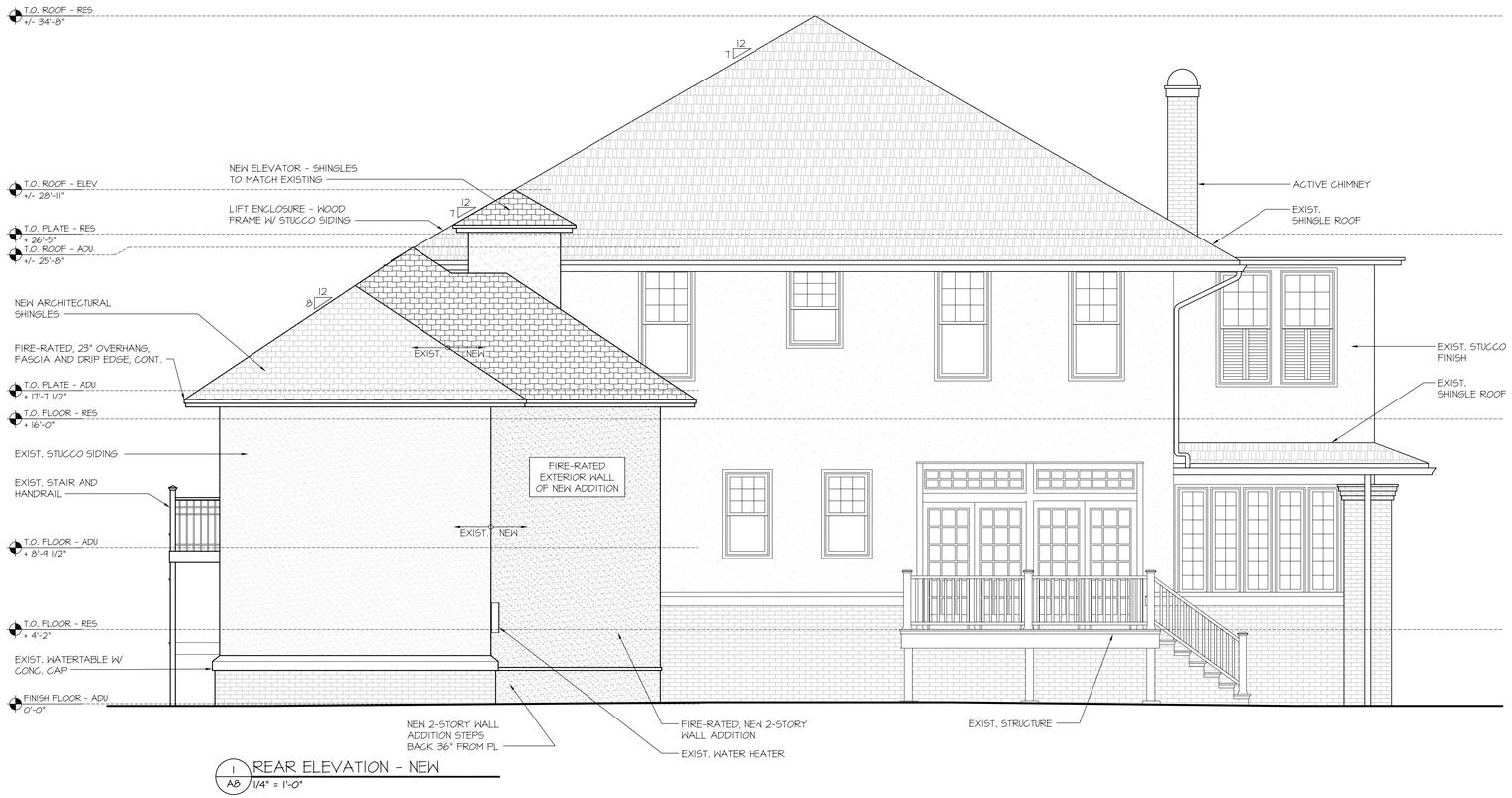

1 / A8 REAR ELEVATION - NEW
1/4" = 1'-0"

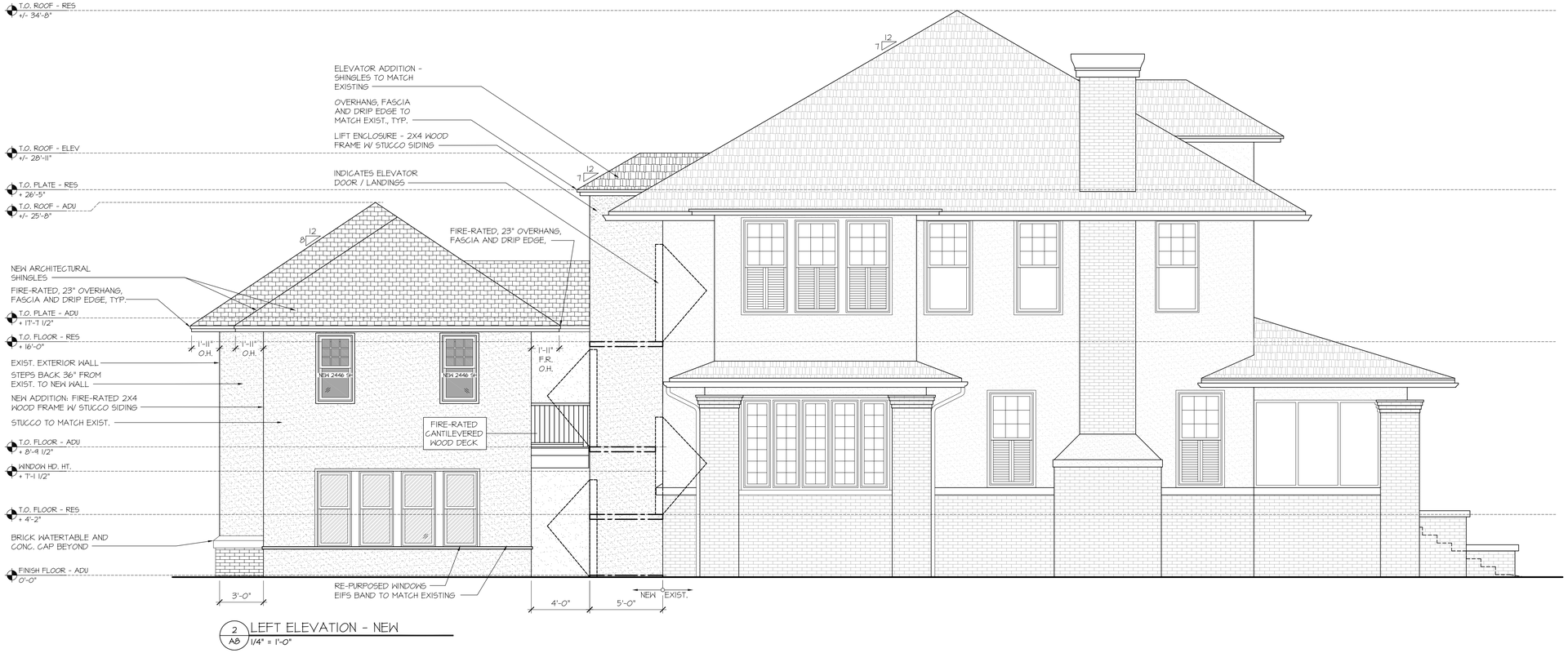

2 / A8 LEFT ELEVATION - NEW
1/4" = 1'-0"

ARCHITECTURE-INC
JAA ARCHITECTURE INC.
2063 OAK STREET
JACKSONVILLE FL 32204
P: (904) 379-5108
E: JOHN@JAAARCHITECTURE.COM
LIC. AR92748

THIS DOCUMENT, ALONG WITH ASSOCIATED DOCUMENTS, IS AN INSTRUMENT OF DESIGNER'S SERVICE FOR THE EXCLUSIVE USE AT THE PROJECT TITLED HEREIN. INFORMATION DERIVED FROM THIS DOCUMENT, AND/OR ASSOCIATED DOCUMENTS, MAY NOT BE USED FOR OTHER WORK(S) OR PROJECT(S) WITHOUT THE EXPRESS WRITTEN PERMISSION OF THE DESIGNER.

TO THE BEST OF THE ARCHITECT'S KNOWLEDGE, THE PLANS AND SPECIFICATIONS COMPLY WITH THE APPLICABLE MINIMUM BUILDING CODES AND THE APPLICABLE FIRE-SAFETY STANDARDS AS DETERMINED BY THE LOCAL AUTHORITY IN ACCORDANCE WITH THIS SECTION AND CHAPTER 633, FLORIDA STATUTES. TO THE BEST OF THE ARCHITECT'S KNOWLEDGE, THE SPACE HAS BEEN DESIGNED TO MEET THE REQUIREMENTS OF THE FLORIDA BUILDING CODE 8TH EDITION 2023 AND THE 8TH EDITION OF THE FLORIDA FIRE PREVENTION CODE BASED ON NFPA 1 FIRE CODE 2023 EDITION & NFPA 101 LIFE SAFETY CODE 2021, 8TH EDITION.

" NEW 2-STORY ADDITION "
LYONS RESIDENCE

1718 OSCEOLA STREET
JACKSONVILLE, FLORIDA 32204

THIS ITEM HAS BEEN DIGITALLY SEALED BY JOHN ALLMAND, ARCHITECT, ON 09/2025. USING A DIGITAL SIGNATURE. PRINTED COPIES OF THIS DOCUMENT ARE NOT CONSIDERED SIGNED AND SEALED AND SIGNATURE MUST BE VERIFIED ON ANY ELECTRONIC COPIES. APPROVED CONSTRUCTION DOCUMENTS ON SITE SHALL BEAR THE "APPROVED" SEAL FROM THE AHJ.

REVISIONS

#	DATE	DESCRIPTION
1		
2		
3		
4		
5		
6		
7		

STATE OF FLORIDA · JOHN ANDERSON ALLMAND · REGISTERED ARCHITECT

NOT FOR CONSTRUCTION

DATE: 09.12.2025

PRJCT #: 25.0177

SHEET

A8

SCHEMATIC DESIGN

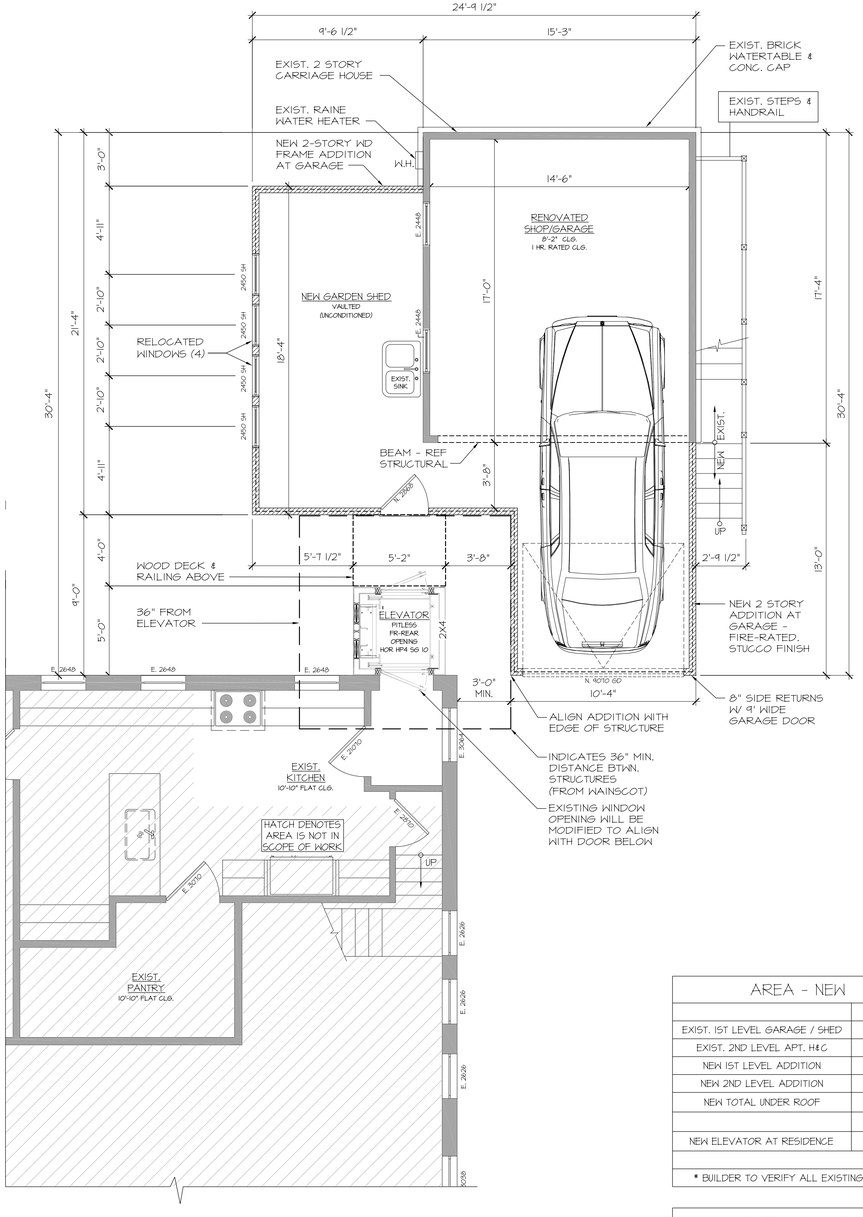

NORTH

1 / A1 FIRST FLOOR PLAN - NEW

1/4" = 1'-0"

AREA - NEW	
	SQFT.
EXIST. 1ST LEVEL GARAGE / SHED	426
EXIST. 2ND LEVEL APT. H&C	268
NEW 1ST LEVEL ADDITION	330
NEW 2ND LEVEL ADDITION	330
NEW TOTAL UNDER ROOF	598
NEW ELEVATOR AT RESIDENCE	27
* BUILDER TO VERIFY ALL EXISTING SQFT. *	

ALL AS-BUILT & NEW CONSTRUCTION DIMENSIONS ARE SUBJECT TO VERIFICATION IN THE FIELD - BUILDER IS RESPONSIBLE FOR VERIFICATION ONCE DEMOLITION HAS BEGUN & PRIOR TO ORDERING PRE-MANUFACTURED TRUSSES/ENGINEERED BEAMS.

PARTITION LEGEND

— EXISTING WALL TO REMAIN

— STRUCTURE OVERHEAD

— NEW WALL

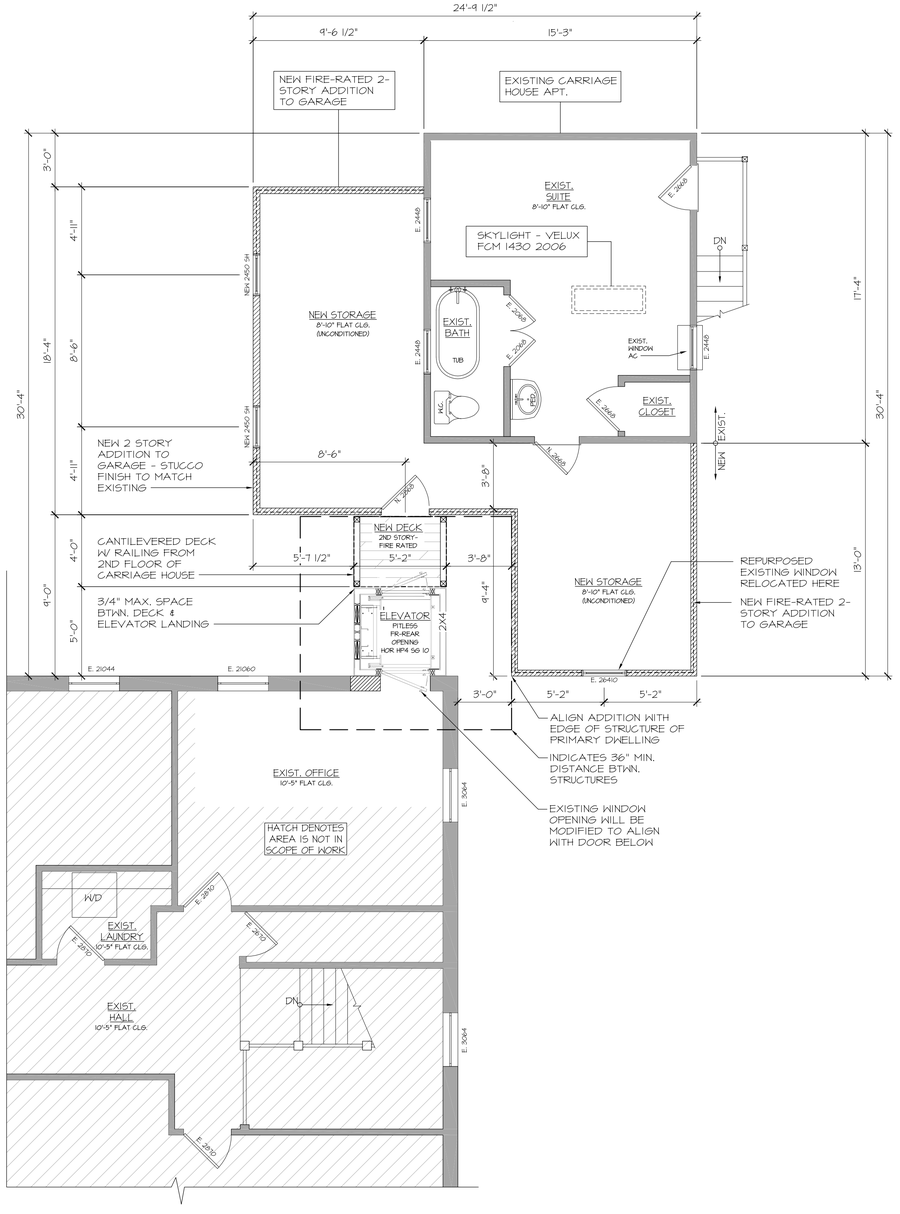

NORTH

2 / A1 SECOND FLOOR PLAN - NEW

1/4" = 1'-0"

ARCHITECTURE - INC

JAA ARCHITECTURE INC.
2063 OAK STREET
JACKSONVILLE FL 32204
P: (904) 379-5108
E: JOHN@JAAARCHITECTURE.COM
LIC. AR92748

THIS DOCUMENT, ALONG WITH ASSOCIATED DOCUMENTS, IS AN INSTRUMENT OF DESIGNER'S SERVICE FOR THE EXCLUSIVE USE AT THE PROJECT TITLED HEREIN. INFORMATION DERIVED FROM THIS DOCUMENT, AND/OR ASSOCIATED DOCUMENTS, MAY NOT BE USED FOR OTHER WORK(S) OR PROJECT(S) WITHOUT THE EXPRESS WRITTEN PERMISSION OF THE DESIGNER.

TO THE BEST OF THE ARCHITECT'S KNOWLEDGE, THE PLANS AND SPECIFICATIONS COMPLY WITH THE APPLICABLE MINIMUM BUILDING CODES AND THE APPLICABLE FIRE-SAFETY STANDARDS AS DETERMINED BY THE LOCAL AUTHORITY IN ACCORDANCE WITH THIS SECTION AND CHAPTER 633, FLORIDA STATUTES. TO THE BEST OF THE ARCHITECT'S KNOWLEDGE, THE SPACE HAS BEEN DESIGNED TO MEET THE REQUIREMENTS OF THE FLORIDA BUILDING CODE 8TH EDITION 2023 AND THE 8TH EDITION OF THE FLORIDA FIRE PREVENTION CODE BASED ON NFPA 1 FIRE CODE 2023 EDITION & NFPA 101 LIFE SAFETY CODE 2021, 8TH EDITION.

" NEW 2-STORY ADDITION "

LYONS RESIDENCE

1718 OSCEOLA STREET

JACKSONVILLE, FLORIDA 32204

THIS ITEM HAS BEEN DIGITALLY SEALED BY JOHN ALLMAND, ARCHITECT, ON 09/2025. USING A DIGITAL SIGNATURE. PRINTED COPIES OF THIS DOCUMENT ARE NOT CONSIDERED SIGNED AND SEALED AND SIGNATURE MUST BE VERIFIED ON ANY ELECTRONIC COPIES. APPROVED CONSTRUCTION DOCUMENTS ON SITE SHALL BEAR THE "APPROVED" SEAL FROM THE AHJ.

REVISIONS

#	DATE	DESCRIPTION
1		
2		
3		
4		
5		
6		
7		

STATE OF FLORIDA · ANDERSON ALLMAND · REGISTERED ARCHITECT

NOT FOR CONSTRUCTION

DATE: 09.12.2025

PRJCT #: 25.0177

SHEET

A2

SCHEMATIC DESIGN

GENERAL ROOF NOTES

1. THE ROOFING PLAN IS GENERAL IN NATURE & INDICATES APPROXIMATE CONDITIONS AT THE PROJECT SITE AT THE TIME THE ROOFING IS READY TO BE INSTALLED. THE CONTRACTOR SHALL NOTIFY THE ARCHITECT AND/OR OWNER OF ANY DISCREPANCIES PRIOR TO PROCEEDING WITH THE WORK.
2. GENERAL CONTRACTOR TO COORDINATE W/ TRUSS MANUFACTURER AND MECHANICAL CONTRACTOR THE PROVISION OF ALL A/C DUCT WORK OPENINGS THOUGH TRUSSES. SUBMIT SHOP DRAWINGS FOR APPROVAL.
3. GENERAL CONTRACTOR AND TRUSS MANUFACTURER TO COORDINATE ALIGNMENT OF TRUSSES. IF ANY DISCREPANCIES CONTACT THE OWNER AND/OR ARCHITECT PRIOR TO FABRICATION OF TRUSSES.
4. FOR COMPLETE ROOFING PLAN DETAILS REFER TO STRUCTURAL DRAWINGS BY OTHERS.
5. OWNER OPTION: PROVIDE ALUMINUM GUTTERS & DOWNSPOUTS IF SELECTED BY OWNER. GC TO INSTALL/COORDINATE.
6. ROOFING MATERIAL COLOR TO BE SELECTED BY OWNER / GENERAL CONTRACTOR
7. METAL FLASHING TO BE 26 GA. G-90 GALVANIZED UNLESS NOTED OTHERWISE.
8. UNDERLAYMENT TO SELF ADHERING UNDERLAYMENT MEMBRANE (POLYGLASS TU PLUS OR EQUAL) OR OTHER CODE COMPLIANT UNDERLAYMENT AS SELECTED BY OWNER
9. PROVIDE PRESSURE-TREATED WOOD BATTENS AS/IF RECOMMENDED BY MANUFACTURER, & FOR ALL ROOFS W/ SLOPES GREATER THAN 7:12, WHEN BATTENS ARE USED, PROVIDE BATTENS 4'-0" LONG MAX. W/ 1/2" SPACE BETWEEN ENDS OF BATTENS, FOR WATER DRAINAGE.
10. ROOFING & INSULATION PER PLANS.

ROOF VENT CALCULATIONS (1:300 RULE)

EXIST. SQFT	1,066 SQFT. (EXISTING HEATED & COOLED), 212 SQFT. (EXISTING PORCH N/A - FLAT ROOF)
NEW SQFT	345 SQFT. (NEW HEATED & COOLED), 54 SQFT. (NEW PORCH)
TOTAL	TOTAL UNDER ROOF : 1,623 SQFT. (EXISTING AND NEW CONSTRUCTION)
N.F.A REQ'D @ EXISTING	1,066 / 300 = 3.553 SQFT. (511.632-IN²) OF N.F.A. REQUIRED SPLIT EVENLY BETWEEN GABLE-END VENTS & NEW O.R.V. AS REQ.
N.F.A REQ'D @ ADDITIONS	399 / 300 = 1.33 SQFT. (191.52 IN²) OF N.F.A. REQUIRED SPLIT EVENLY BETWEEN GABLE END VENT & UPPER ROOF = 95.76 IN² EA.)
VENTS	(EXISTING TO BE VERIFIED - ATTIC IS VENTED) - PROVIDE NEW GABLE END VENTS & O.R.V.

1. SOFFIT VENT TYPE TO BE DETERMINED BY G.C.
2. THE CALCULATIONS AND VENT LOCATIONS INDICATED ON THESE PLANS ARE FOR REFERENCE ONLY. RIDGE VENTS ARE CALCULATED AT 12.5 SQ. IN. PER FT. OF N.F.A. ORVs ARE CALCULATED AT 165 SQ. IN. OF NFA. IT IS THE RESPONSIBILITY OF THE GC TO COORDINATE VENTILATION TO BE INSTALLED WITH MANUFACTURER AND PROVIDE ALL NECESSARY VENTILATION AT ROOF AS PER THE FLORIDA BUILDING CODE.
3. PROVIDED ROOF EXHAUST N.F.A. SHALL NOT EXCEED THE PROVIDED INTAKE SOFFIT N.F.A. INTAKE SOFFIT SHALL BE EQUAL TO OR GREATER THAN EXHAUST N.F.A.
4. EXAMPLE: 18" FULLY VENTED VINYL SOFFIT PROVIDES APPROX. 9 SQ.IN. PER SQ. FT OF NET FREE AREA
5. EXAMPLE: 12" FULLY VENTED SCREEN SOFFIT PROVIDES APPROX. 6 SQ.IN. PER SQ. FT OF NET FREE AREA

* N.F.A. = NET FREE AREA * O.R.V. = OFF RIDGE VENT

ROOF FRAMING NOTES

1. ROOF SHALL BE CONVENTIONALLY FRAMED PER ENGINEER DWGS. TO MATCH EXIST., VERIFY IN FIELD.
2. FRAMING LUMBER SHALL BE #2 SPF OR BETTER.
3. ROOF SLOPE SHALL BE 8:12 AT CARRIAGE HOUSE TO MATCH EXISTING, 7:12 AT ELEVATOR ADDITION TO MATCH EXISTING MAIN ROOF
4. ADDITION OVERHANG SHALL BE +/- 1'-11" & 1'-0" FROM EXTERIOR FACE OF STUDS TO TAIL OF RAFTER, V.I.F. * ELEVATOR OVERHANG SHALL BE 8"
5. ROOFING SHALL BE ARCHITECTURAL ASPHALTS - SELECTION BY BUILDER / MATCH EXISTING
6. HEADER AND BEAM SIZES TO BE DETERMINED BY STRUCTURAL ENGINEER.
7. CONTRACTOR TO PROVIDE SOFFIT & ROOF VENTING AS REQUIRED TO MEET MANUFACTURER SPECS. AND LOCAL CODE REQUIREMENTS
8. TRUSS ENGINEER TO ADD HEELS AS REQUIRED TO PLANE FASCIAS AT OPPOSING PITCHES.
9. INSTALL ROOF VENTS PER MANUFACTURER WRITTEN INSTRUCTIONS PER FBC SECTION R806
10. INSTALL (2) LAYERS OF FELT AT ALL ROOF SECTIONS WITH A 3:12 ROOF PITCH OR LESS U.O.N.

** REF: SHEET A6 FOR TYP. WALL SECTIONS **

** REF: SHEET ADI FOR TYP. CODE REFERENCES **

NOTE

ALL VENT STACK, PIPES, EXHAUSTS, ETC., TO BE LOCATED ON REAR OF HOUSE AND NOT VISIBLE FROM STREET.

NOTE

ALL PLATE HGTS. ARE TAKEN FROM THE TOP OF THE MAIN HOUSE SLAB/BLK. (FIN. FLR.)

BUILDING DESIGN CRITERIA

(REFER TO STRUCTURAL DRAWINGS BY OTHERS)

ALL AS-BUILT & NEW CONSTRUCTION DIMENSIONS ARE SUBJECT TO VERIFICATION IN THE FIELD - BUILDER IS RESPONSIBLE FOR VERIFICATION ONCE DEMOLITION HAS BEGUN & PRIOR TO ORDERING PRE-MANUFACTURED TRUSSES/ENGINEERED BEAMS.

NOTES:

+/- HEEL TBD @ ALL RAFTERS

EXTERIOR DIMENSIONS TO SHEATHING OVER 2X4 STUDS (SHEATHING FLUSH W/ FOUNDATION)

ATTIC INSULATION TO BE AS INDICATED ON INDEX SHEET ADI AND PER THE ENERGY FORMS

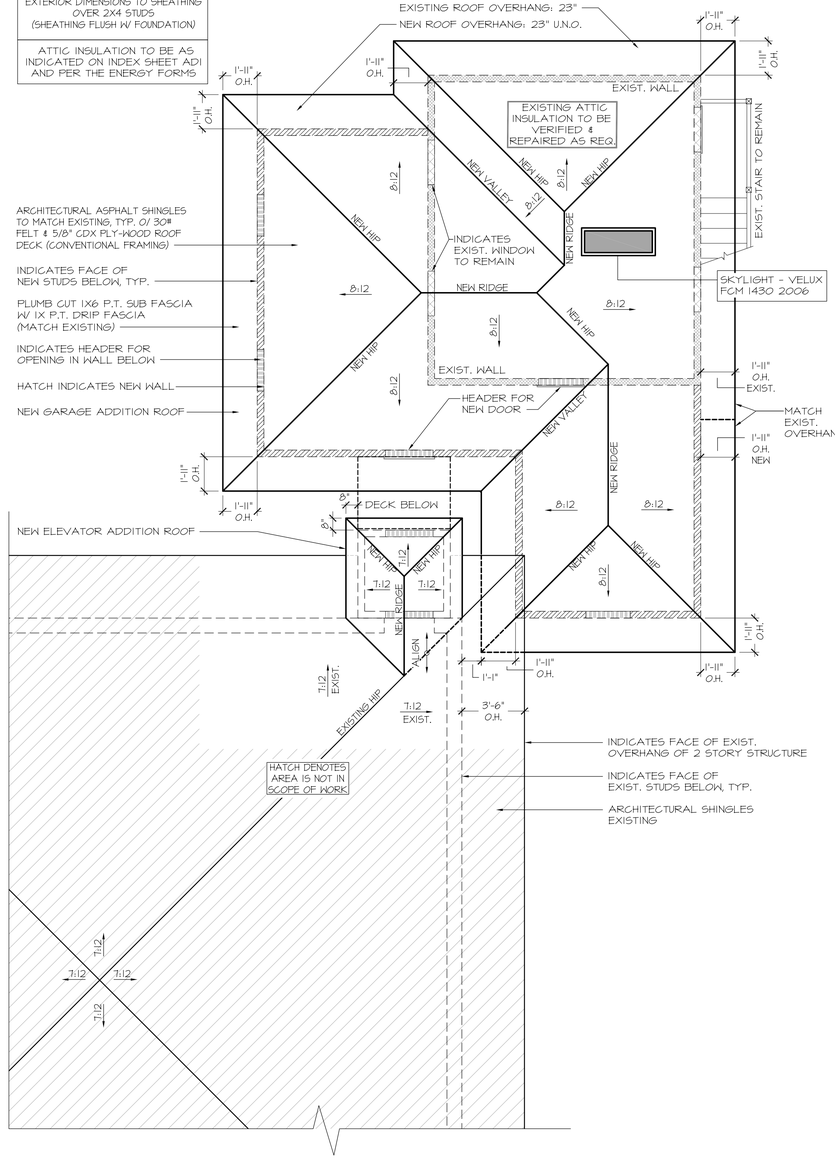

NORTH

A3 — 1 — ROOF PLAN - EXISTING W/ NEW

1/4" = 1'-0"

ARCHITECTURE - INC

JAA ARCHITECTURE INC.
2063 OAK STREET
JACKSONVILLE FL 32204
P: (904) 379-5108
E: JOHN@JAAARCHITECTURE.COM
LIC. AR92748

THIS DOCUMENT, ALONG WITH ASSOCIATED DOCUMENTS, IS AN INSTRUMENT OF DESIGNER'S SERVICE FOR THE EXCLUSIVE USE AT THE PROJECT TITLED HEREIN. INFORMATION DERIVED FROM THIS DOCUMENT, AND/OR ASSOCIATED DOCUMENTS, MAY NOT BE USED FOR OTHER WORK(S) OR PROJECT(S) WITHOUT THE EXPRESS WRITTEN PERMISSION OF THE DESIGNER.

TO THE BEST OF THE ARCHITECT'S KNOWLEDGE, THE PLANS AND SPECIFICATIONS COMPLY WITH THE APPLICABLE MINIMUM BUILDING CODES AND THE APPLICABLE FIRE-SAFETY STANDARDS AS DETERMINED BY THE LOCAL AUTHORITY IN ACCORDANCE WITH THIS SECTION AND CHAPTER 633, FLORIDA STATUTES. TO THE BEST OF THE ARCHITECT'S KNOWLEDGE, THE SPACE HAS BEEN DESIGNED TO MEET THE REQUIREMENTS OF THE FLORIDA BUILDING CODE 8TH EDITION 2023 AND THE 8TH EDITION OF THE FLORIDA FIRE PREVENTION CODE BASED ON NFPA 1 FIRE CODE 2023 EDITION & NFPA 101 LIFE SAFETY CODE 2021, 8TH EDITION.

" NEW 2-STORY ADDITION "
LYONS RESIDENCE

1718 OSCEOLA STREET
JACKSONVILLE, FLORIDA 32204

THIS ITEM HAS BEEN DIGITALLY SEALED BY JOHN ALLMAND, ARCHITECT, ON 09/2025 USING A DIGITAL SIGNATURE. PRINTED COPIES OF THIS DOCUMENT ARE NOT CONSIDERED SIGNED AND SEALED AND SIGNATURE MUST BE VERIFIED ON ANY ELECTRONIC COPIES. APPROVED CONSTRUCTION DOCUMENTS ON SITE SHALL BEAR THE "APPROVED" SEAL FROM THE AHJ.

REVISIONS

#	DATE	DESCRIPTION
1		
2		
3		
4		
5		
6		
7		

STATE OF FLORIDA — JOHN ALLMAND — REGISTERED ARCHITECT

NOT FOR CONSTRUCTION

DATE: 09.12.2025

PRJCT #: 25.0177

SHEET

A3

SCHEMATIC DESIGN

1718 Osceola Street – HPC – COA application supplemental information

Photos of Area of Addition:

Front Elevation

Left Elevation

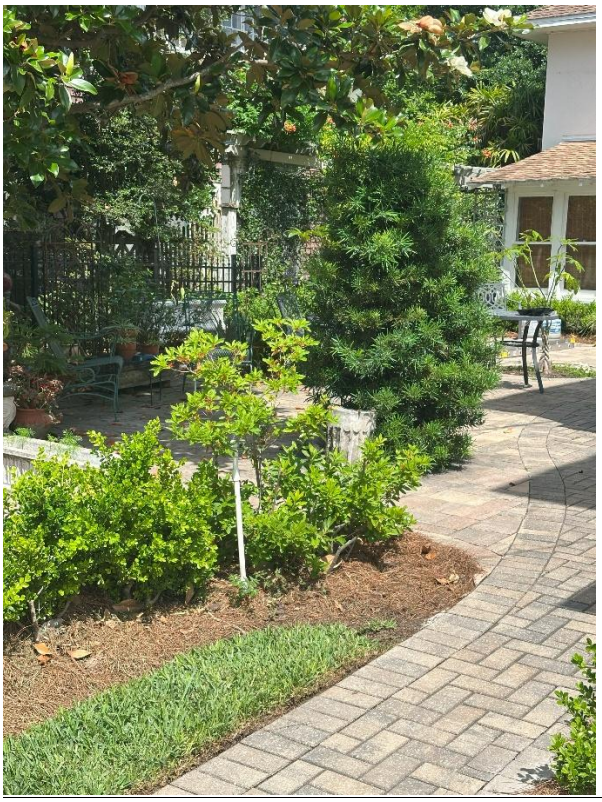

Left Elevation – Pool Area

Rear Elevation

Right Elevation

Lift Location at NW corner of residence

Lift Location in proximity to Carriage House – right / driveway side

End of Photos of Area Of Addition

1718 Osceola Street – HPC – COA application supplemental information

Overall Photos of Site:

Front Elevation

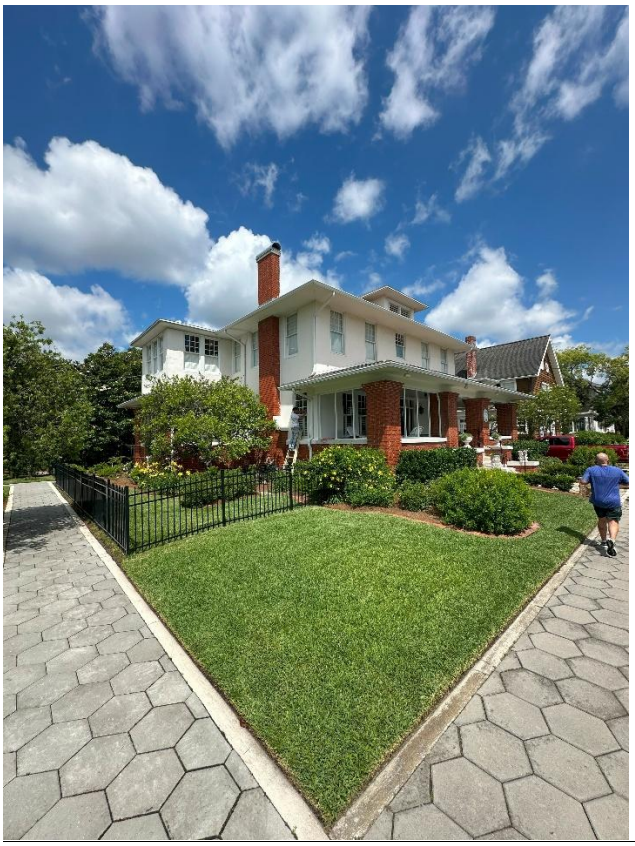

NW corner

Right Elevation

SW Corner

Rear Elevation

Right Elevation

End of overall photos of site

EDEN COAST LLC

Where Tradition Meets GREEN

Wave Raised Panel

Wood never looked this good for this long!

EDEN COAST LLC – Manufacturer of Custom Composite Garage Doors.

8/4 Dogwood with Arch/S5

If you can dream it, we can build it!

At Eden Coast, we understand that the finishing details of your home are unique and special. Therefore, we proudly stand on our guiding principle, "If you can dream it, we can build it."

What sets us apart is our dedication to you. Our superior craftsmanship, innovative manufacturing and finishing capabilities allow us to accomplish just about any architectural design you can dream. We are committed to giving you the look you love without the maintenance.

So, take my advice, go on, dream a little and let us serve you.

Sincerely,

Duane Laricey
President

Leatherwood/W3/4/4 Arched Window with Optional Decorative Hardware

Providence with Arch and Custom Molding/S6

Raised Panel/Cherry Match

We can customize your door, and still eliminate maintenance for years to come.

We construct our doors by overlaying commercial or residential steel sections with our environmentally friendly, composite materials. We use different board thicknesses. From ½" to 1 ½", our different board dimensions allow us to create the best detail in the industry.

Custom Raised Panel/W4

CUSTOM INLAID MOLDINGS & TRIMS ARE AVAILABLE ON ALL DESIGNS.

Louisville/W4

EDEN COAST DOORS ARE DESIGNED TO BE MAINTENANCE FREE.

OUR UNIQUE FINISHING TECHNIQUES ALLOW US TO OFFER TRADITIONAL WOOD COLORS SUCH AS CEDAR, OAK AND MAHOGANY, AS WELL AS FIVE OTHER STANDARD COLORS. WE ALSO CUSTOM MATCH MANY TYPES OF WOODS AND FINISHES.

Eden Coast is happy to offer a **5 YEAR WARRANTY** on the finish of all of our stain-finished doors.

Custom Raised Panel/Custom Mahogany Match/Option H Window

Magnolia with Arch/W5 with Optional Decorative Hardware

Leatherwood Custom/Custom Color/Option H Window with Optional Decorative Hardware

Leatherwood Custom/Mahogany Color
with Optional Decorative Hardware

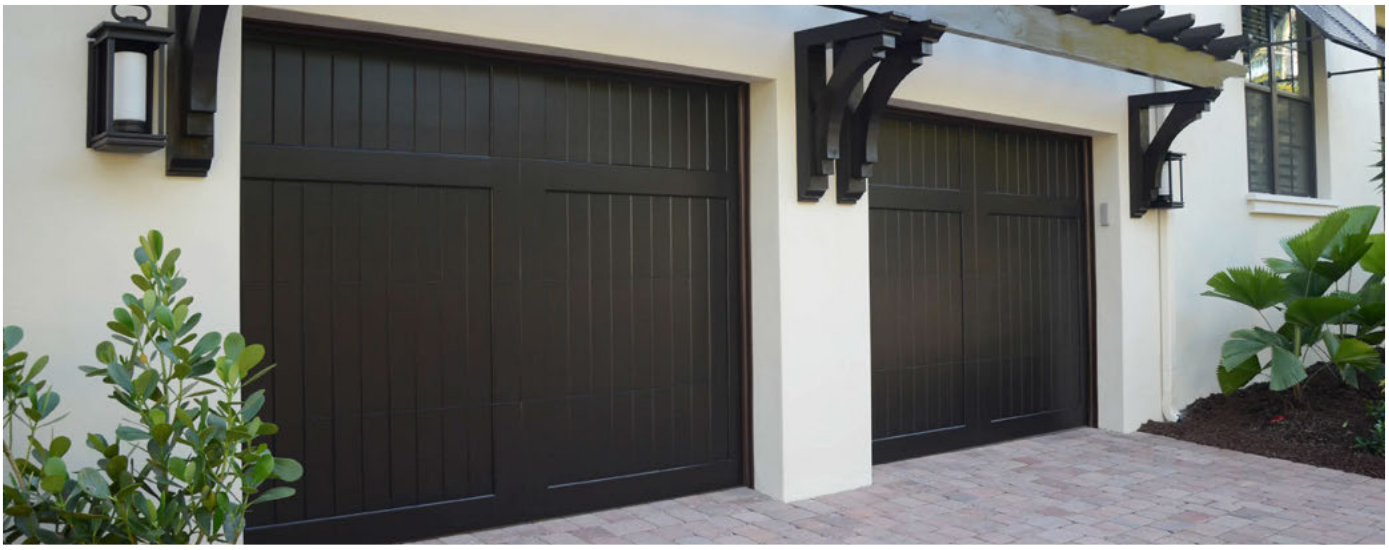

Providence

Magnolia with Arch, and Optional Clavos

Birmingham

Custom Horizontal Plank

Custom Recessed Panel

Magnolia with Arch

Custom Raised Panel with Decorative Molding

Custom Birmingham with Impact Glass

Raised Panel

Dogwood

Custom Design and Paint

BACKED BY THE STRONGEST GUARANTEE IN THE INDUSTRY.

WE PRE-FINISH IN ANY PAINT COLOR, INCLUDING BLACK.

No matter the design, all of our overlays are impervious to moisture, mold and mildew. Because we don't use wood, there are no wood feeding insects, no cracking, warping or splitting. A **10 YEAR WARRANTY** is available on some of our painted doors.

Magnolia with Arch

Birmingham/White Automotive Paint/Option D Window

Custom Design in Combination Paint/Stain Finish

Hawthorne

Louver Painted

Louver Painted

Louver Painted

Louver Stained

Raised Panel

Custom Birmingham

Bridgemill

Custom Design

Birmingham with Clear Glass

Louver Design in Paint Finish/Custom Color

OUR MOST POPULAR DESIGNS

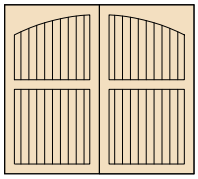
LEATHERWOOD

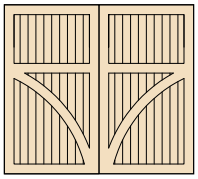
ANDERSON

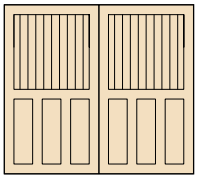
ASHEVILLE

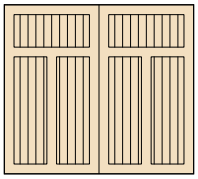
BIRMINGHAM

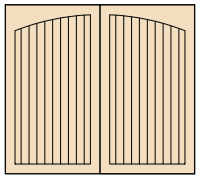
BRIDGEMILL

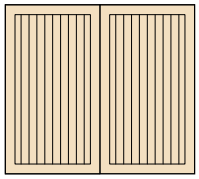
CAMBRIDGE

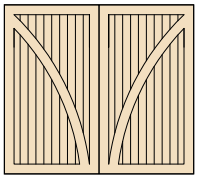
CHARLESTON

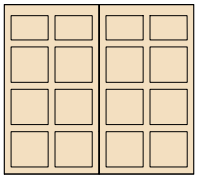
DOGWOOD

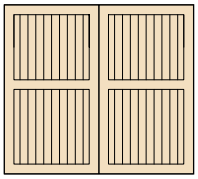
HAMPTON

YOUR DREAM DOOR HERE!

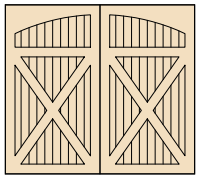
LOUISVILLE

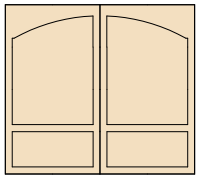
MAGNOLIA-ARCH

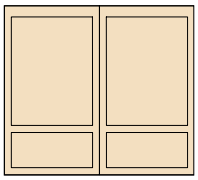
MAGNOLIA

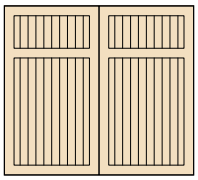
PROVIDENCE

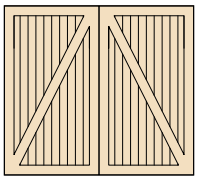
SARATOGA

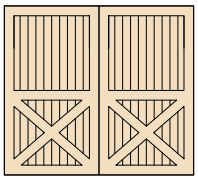
ST. AUGUSTINE

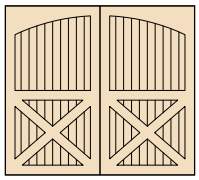
SUMMERHAVEN

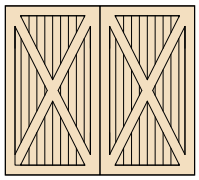
WILLIAMSBURG

V-GROOVE, BEAD BOARD OR SMOOTH BACKINGS AVAILABLE

- **A** Environmentally friendly, composite material.
- **B** Board thickness ranges from 1/2" to 1 1/2" to achieve desired detail.
- **C** Custom molding, routed or square edges available.
- **D** 2" steel sandwich door with foam insulation.

Foam Options:

Polystyrene foam door
R value – 11.24

Polyurethane foam door
R value – 20.04

All of our materials are proudly **MADE IN THE USA.**

ENDLESS POSSIBILITIES

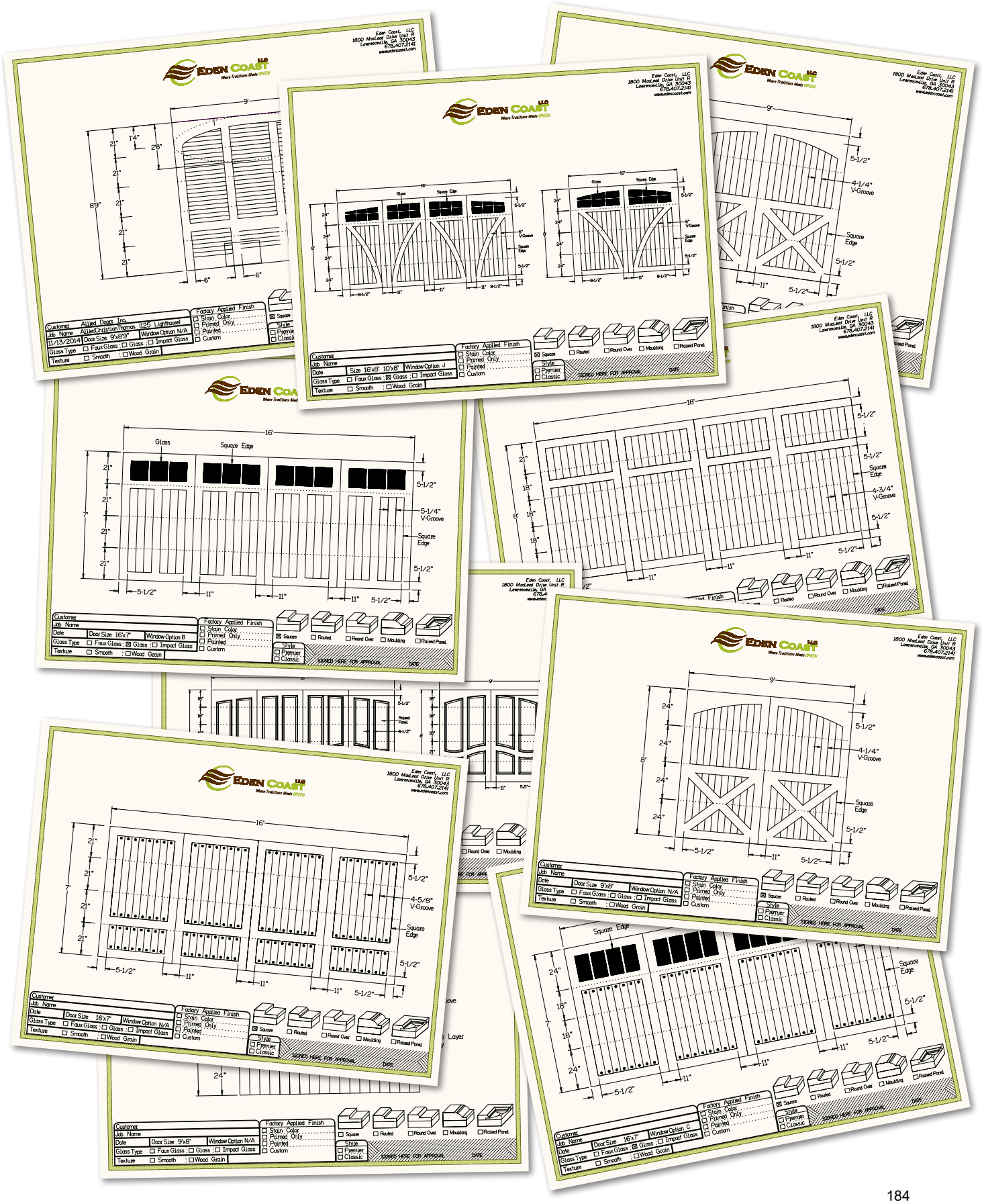

WINDOW OPTIONS

Windows and glass options are completely customizable. From our standard designs, to your custom design, all of our windows are custom built. Glass options range from standard DSB to insulated antique glass.
Just let us know what you're looking for.

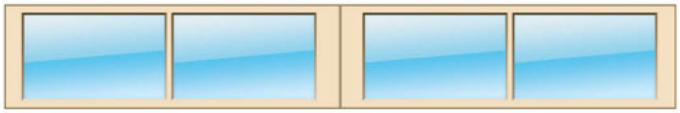
OPTION A

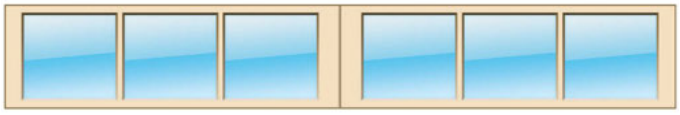
OPTION B

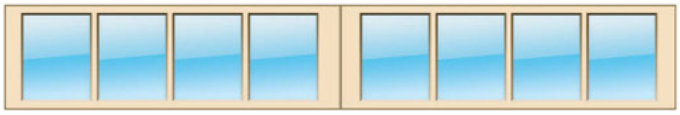
OPTION C

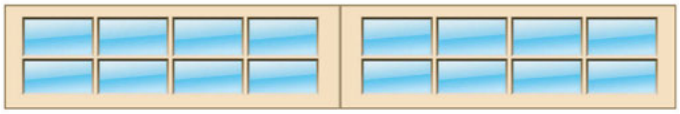
OPTION D

OPTION E

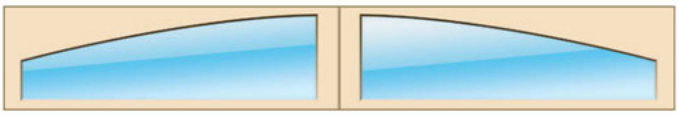
OPTION F

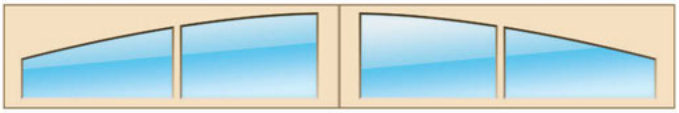
OPTION G

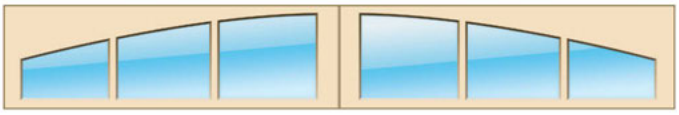
OPTION H

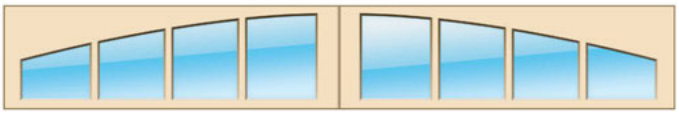
OPTION I

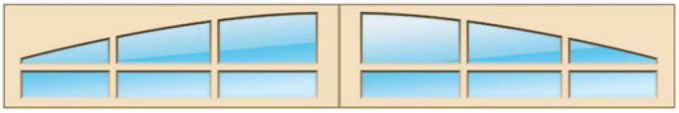
OPTION J

OPTION K

IMPACT GLASS

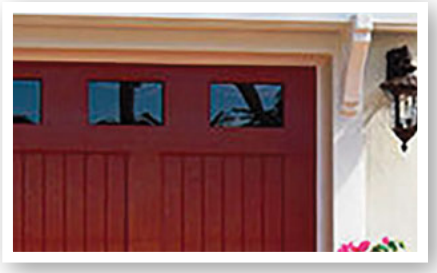
IMPACT GLASS

FAUX GLASS

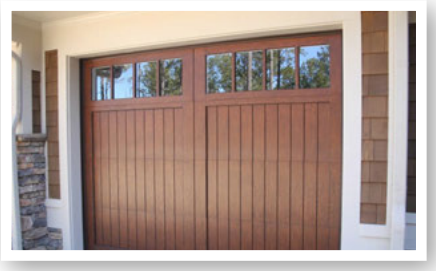
STANDARD GLASS

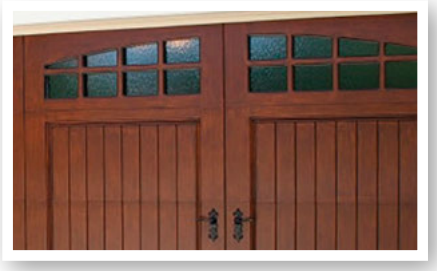
DECORATIVE FROSTED GLASS

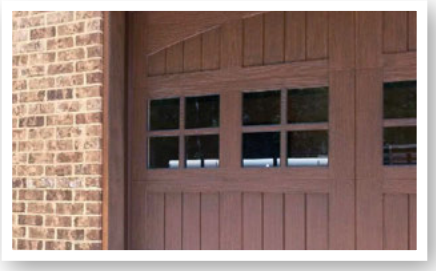
GLASS IN 3RD SECTION

PRE-FINISH OPTIONS

Eden Coast offers 8 standard stain colors available in a smooth or wood grain texture. We can also custom match any stain to meet your needs.

SMOOTH

S1

S2

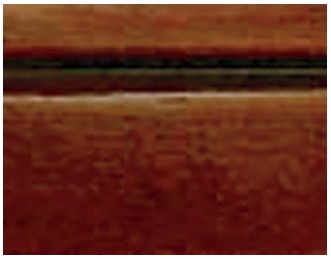
S3

S4

S5

S6

S7

S8

WOOD GRAIN

W1

W2

W3

W4

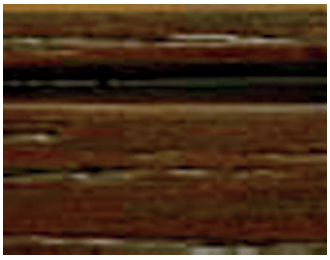
W5

W6

W7

W8

EDEN COAST LLC

Where Tradition Meets GREEN

CREATE YOUR CUSTOM ARCHITECTURAL EXPRESSION WITH PRODUCTS THAT DEFINE SUSTAINABILITY & INNOVATION

HOW MAY WE SERVE YOU?

1800 MacLeod Drive | Unit R | Lawrenceville, GA 30043
Phone: (678) 407-2141 | Toll Free (888) 407-2114 | Fax (678) 407-2116
www.edencoast.com | sales@edencoast.com

PELLA® RESERVE™ TRADITIONAL

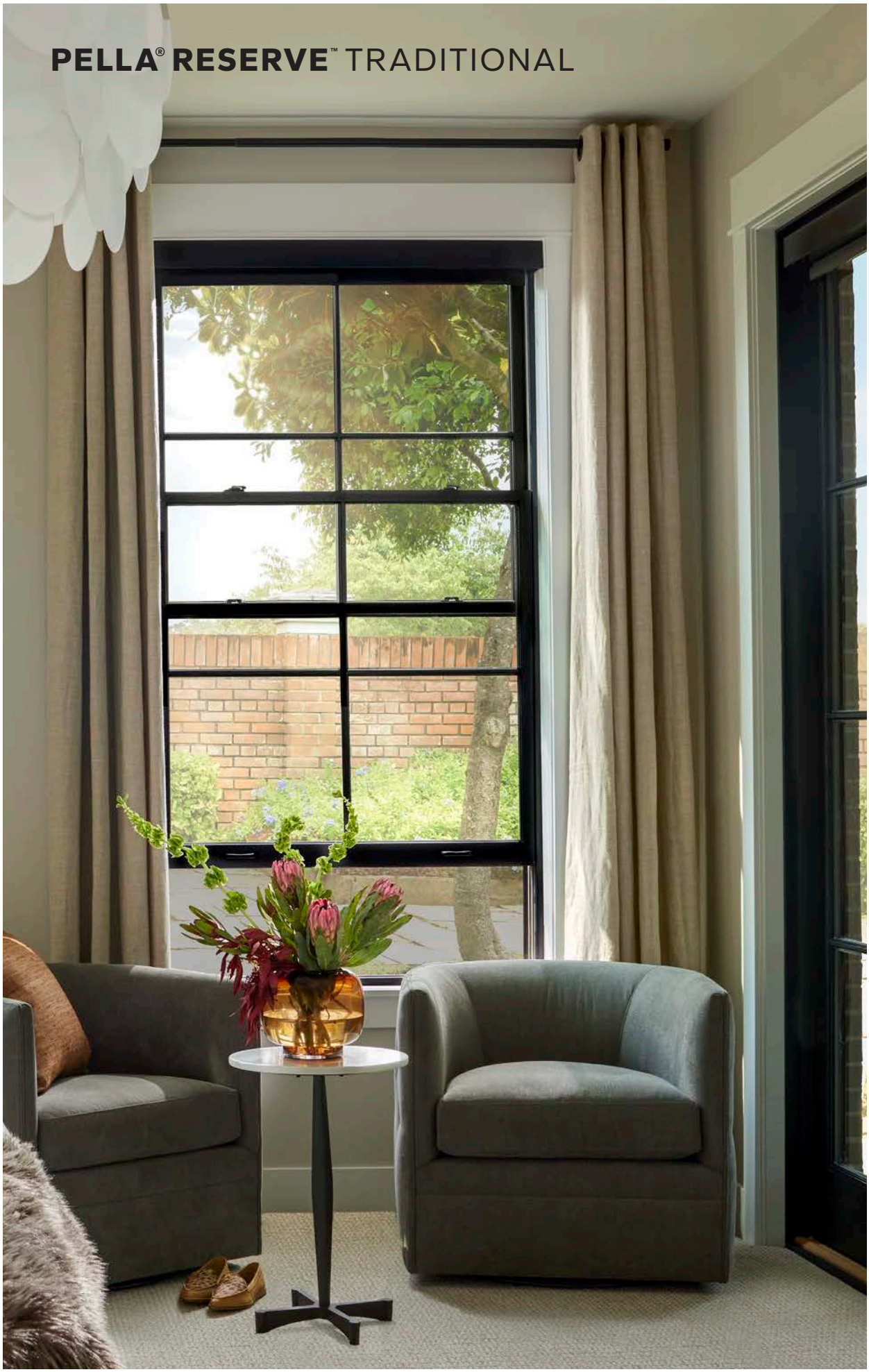

ALUMINUM-CLAD WOOD WINDOWS & PATIO DOORS

EXQUISITELY DESIGNED WINDOWS AND DOORS WITH UNPARALLELED HISTORICAL DETAILING.

WHY YOU CAN TRUST PELLA

At Pella, we don't just create windows and doors. We innovate with purpose, design with passion, build with integrity and deliver with pride.

RATED #1 BY HOMEOWNERS FOR INNOVATION[1]

We are continually striving to improve what we do and how we do it. That drive has earned us 150 patents and counting for amazing innovations. In 1925 we opened our doors with the patented Rolscreen® retractable screen, a time-tested innovation that is still one of our most desired features today.

RATED #1 BY HOMEOWNERS FOR HIGHEST QUALITY[1]

We make products specifically for you with meticulous care and attention. Our wood craftsmen have been honing their skills, on average, for over 14 years — that's longer than it takes for most to earn their PhD. And it doesn't stop there. Our product designs are tested beyond industry standards, so you can trust them to perform. Door designs are tested to 100,000 open and close cycles, and double-hung and casement window designs are tested at least 6,000 times.

THE BEST LIMITED LIFETIME WARRANTY FOR WOOD WINDOWS AND PATIO DOORS[2]

You can feel confident in your investment. We pride ourselves on providing exceptional quality, exceeding expectations and going beyond requirements. That's why we stand behind all of our wood windows and patio doors with a limited lifetime warranty.[3]

[1] Study of homeowner perceptions of leading national brands. Study commissioned by Pella, 2021.

[2] Based on comparing written limited warranties of leading national wood window and wood patio door brands. See written limited warranties for complete details, including exceptions and limitations, at pella.com/warranty, or contact Pella Customer Service.

[3] See written limited warranties for complete details, including exceptions and limitations, at pella.com/warranty, or contact Pella Customer Service.

OUR DEDICATED TEAM IS PART OF YOUR PROJECT'S POTENTIAL. WE PROVIDE SOLUTIONS TO HELP COMPLETE YOUR PROJECT."

— ALAN PICKETT,
PELLA ARCHITECTURAL SOLUTIONS

WHY CHOOSE WOOD?

Get the beauty and warmth of natural wood, our most customizable designs and exceptional energy efficiency. All Pella wood products are made with high-quality wood, metal and manufacturing processes, regardless of product line.

EXCLUSIVE WOOD PROTECTION

Pella's exclusive EnduraGuard® wood protection is applied after the pieces have been cut and milled, but prior to final assembly, providing advanced protection against the elements.

DESIGNED FOR LONG-LASTING DURABILITY

Intentional jamb-on-sill design helps seal the end grain of the wood and elevates it off the rough opening, reducing the potential to absorb moisture. For added strength and durability, our three-way corner joints are made up of mortise-and-tenon, metal fasteners and commercial adhesive.

QUALITY EXTERIOR AND INTERIOR FINISHES

Extruded aluminum-clad exteriors feature through-stile construction for exceptional durability and EnduraClad® finishes that resist fading and chalking. Interiors can be factory pre-finished to save time. Our prefinish is applied prior to final assembly and kiln-cured for a quality aesthetic.

Pella LIMITED LIFETIME WARRANTY

THE BEST LIMITED LIFETIME WARRANTY FOR WOOD WINDOWS AND PATIO DOORS*

You can be confident in your investment. At Pella, we are committed to designing and building wood products with exceptional quality and durability. This is supported by:

ENDURAGUARD® WOOD PROTECTION
Advanced protection for wood against the effects of moisture, decay, stains from mold and mildew — as well as termite damage.

EXTERIOR ALUMINUM CLADDING
Exceptionally durable aluminum cladding with EnduraClad® exterior finish helps protect windows and patio doors for years.

INSULATING GLASS SEAL
A long-lasting insulating glass seal provides a clear view and exceptional energy efficiency.

* Based on comparing written limited warranties of leading national wood window and wood patio door brands. See written limited warranty for details, including exceptions and limitations, at pella.com/warranty or contact Pella Customer Service.

190

EVERY DETAIL MATTERS

Created for those who refuse to settle for anything less than extraordinary, Pella Reserve – Traditional products provide unparalleled historical detailing. From authentic hardware and a disappearing screen to sash lugs that allow tilting, we've thought of every detail.

WHY CHOOSE PELLA® RESERVE™ — TRADITIONAL?

Revel in the authenticity and bring your design vision to life. Exuding the tenets of traditional designs, Pella Reserve – Traditional products provide historical elements with uncompromised attention to detail.

HISTORIC PUTTY PROFILE

Further your aesthetic with the putty profile, recreated with historically accurate angles — providing meaningful depth and a realistic shadow. Pella Reserve products offer the industry's deepest sash dimensions for a richer and more dramatic aesthetic for your project.

THROUGH-STILE CONSTRUCTION

Essential to the tradition of window making, butt joinery and through-stile construction create authentic proportions and emulate historic window design.

INTEGRAL LIGHT TECHNOLOGY®

Pella's Integral Light Technology helps capture the look of true-divided-light without sacrificing energy efficiency.

AUTHENTIC HARDWARE

Complement your project with historically authentic spoon-lock window hardware. Our Antiek casement window hardware is inspired by period furniture to deliver authentic, traditional style. Add charm to patio doors with premium hardware created in collaboration with Baldwin®.

AVAILABLE IN THESE WINDOW AND PATIO DOOR STYLES:

Angle-Top Window · **Awning Window** · **Bay or Bow Window** · **Casement Window** · **Push-Out Casement Window** · **Corner Window** · **Curve-Top Window** · **Fixed Window**

Double-Hung Window · **Single-Hung Window** · **Hinged Patio Door** · **Sliding Patio Door** · **Bifold Patio Door** · **Multi-Slide Patio Door**

Special shapes also available.

ACHIEVE YOUR VISION WITHOUT CONCESSIONS

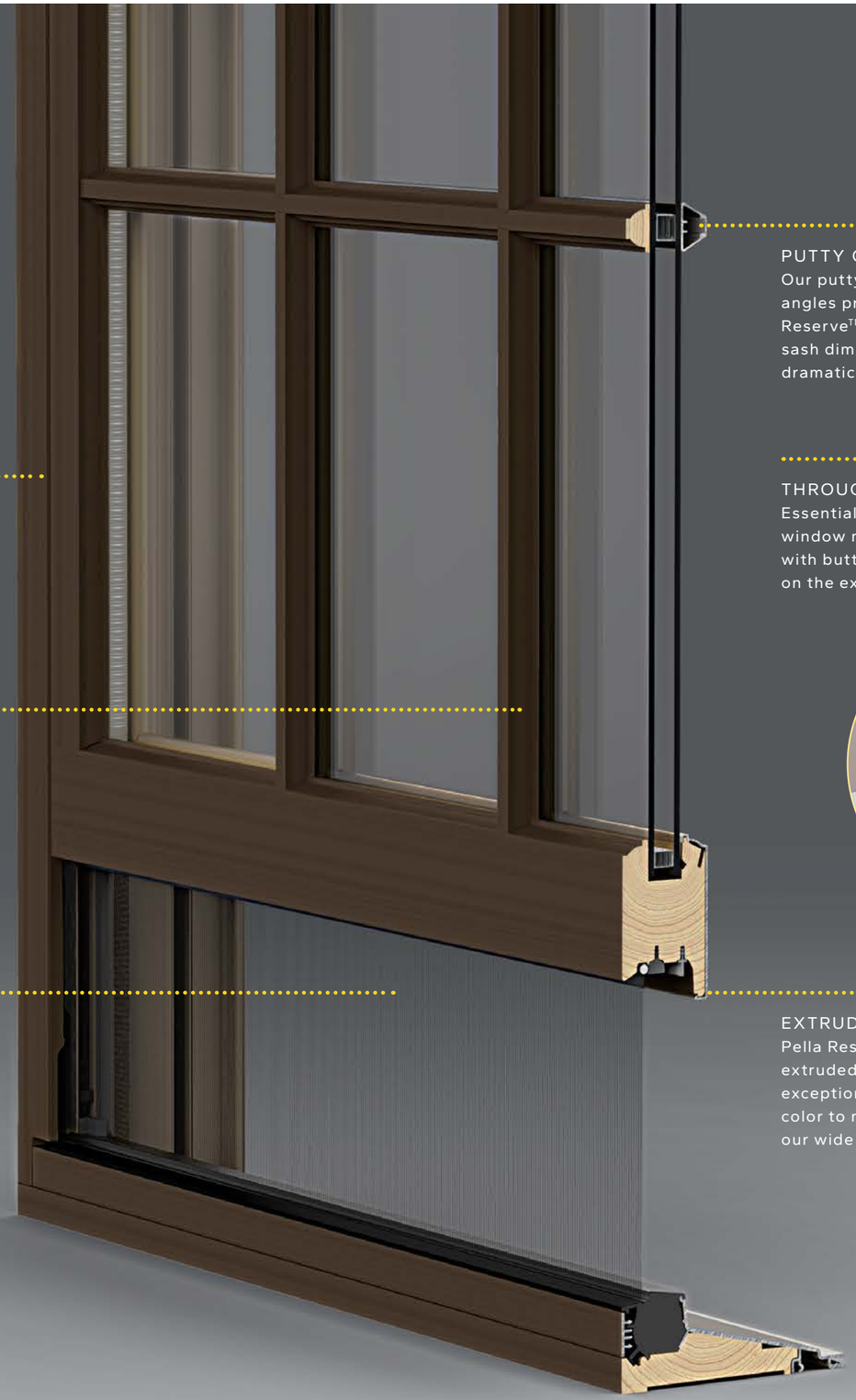

TAILOR-MADE SOLUTIONS

Partner with Pella. From preliminary drawings to installation, Pella's expert team of architects, engineers, drafters and consultants can work to deliver custom window and door solutions for your project.

AUTHENTIC LOOK OF TRUE DIVIDED LIGHT

Our Integral Light Technology® grilles help capture the look of true-divided-light without sacrificing energy performance, giving you a more authentic look.

INTEGRATED ROLSCREEN®

The Integrated Rolscreen retractable screen provides a cleaner, more polished look. The Integrated Rolscreen is a double- and single-hung screen that appears when you open the window, and rolls away, out of sight, when you close it.

PUTTY GLAZE PROFILE

Our putty profile with historically accurate angles provides a realistic shadow. Pella® Reserve™ products offer the industry's deepest sash dimension for a richer, deeper and more dramatic aesthetic for your project.

THROUGH-STILE CONSTRUCTION

Essential to the authenticity of traditional window making, historical accuracy is achieved with butt joinery and through-stile construction on the exterior cladding.

EXTRUDED ALUMINUM EXTERIORS

Pella Reserve products are available with extruded aluminum-clad exteriors for exceptional durability. Create a custom exterior color to meet your design needs or choose from our wide variety of color options.

WE KNOW DETAILS MAKE ALL THE DIFFERENCE. THAT'S WHY PELLA FOCUSES ON THE HISTORICAL DETAILS TO DELIVER THE LEVEL OF AUTHENTICITY YOU DESIRE."

— ALAN PICKETT,
PELLA ARCHITECTURAL SOLUTIONS

THE BEST OF BOTH WORLDS

The Integrated Rolscreen® is there when you need it and hidden when you don't. Stored safely inside the window when it's closed the retractable screen gives a cleaner, more polished look and eliminates maintenance of seasonal screen removal and storage.

COLORS & FINISHES

Wood Types

Choose the wood species that best complements your project's interior.

Custom solutions:

Pine | Douglas Fir | Mahogany | White Oak | Red Oak | Cherry | Maple

Prefinished Pine Interior Colors

When you select pine, we can prefinish in your choice of a variety of paints and stains. Unfinished or primed and ready-to-paint are also available.

White | Bright White | Linen White | Natural Stain | Golden Oak Stain | Early American Stain | Provincial Stain

Dark Mahogany Stain | Red Mahogany Stain | Espresso Stain | Charcoal Stain | Black Stain

Extruded Aluminum-Clad Exterior Colors

Our low-maintenance EnduraClad® exterior finish resists chalking and fading. Take durability further with EnduraClad Plus protective finish, which meets the industry's highest exterior coating standard to defend against chalking and fading.*

Black | White | Brown | Fossil

Iron Ore | Portobello | Putty | Almond | Classic White | Brick Red | Hartford Green

Pearl Gray | Soft Linen | Satin Steel | Matte Gray | Wolf Gray | Spice Red | Sage

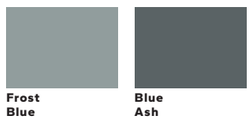

Frost Blue | Blue Ash

Custom colors are also available.

* EnduraClad Plus protective finish is not available with all colors. See your local Pella sales representative for availability.

WINDOW HARDWARE

Classic Collection

Get a timeless look with authentic styles in classic finishes.

Fold-Away Crank
Antiek

Spoon-Style Lock

Finishes:

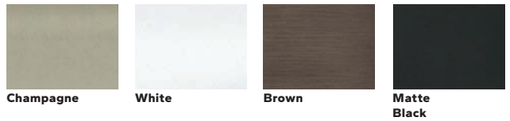

Champagne | White | Brown | Matte Black | Oil-Rubbed Bronze | Satin Nickel | Satin Brass

Essential Collection

Select from popular designs and finishes to suit every style.

Fold-Away Crank

Cam-Action Lock

Finishes:

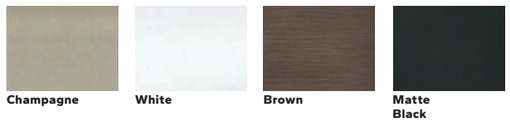

Champagne | White | Brown | Matte Black | Oil-Rubbed Bronze | Satin Nickel | Satin Brass

PATIO DOOR HARDWARE

Classic Collection

BALDWIN

Choose timeless pieces, created in collaboration with Baldwin® Hardware, for a look that will never go out of style.

Hinged & Bifold Patio Door Handle
Virago

Sliding & Multi-Slide Patio Door Handle
Ambrose

Multi-Slide Patio Door Handle[1, 2]

Finishes:

Matte Black | Oil-Rubbed Bronze | Satin Nickel | Satin Brass

Essential Collection

Elevate your style and transform your home with elegant selections.

Hinged & Bifold Patio Door Handle

Sliding Patio Door Handle

Multi-Slide Patio Door Handle[1, 2]

Finishes:

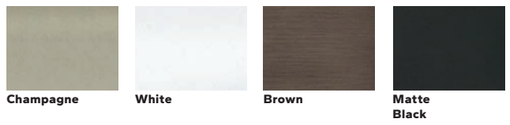

Champagne | White | Brown | Matte Black | Oil-Rubbed Bronze | Satin Nickel | Satin Brass

Additional hardware collections available. See your local Pella sales rep for more options.

[1] Flush multi-slide handle is a Pella exclusive design.
[2] Flush multi-slide handle is not available in Champagne.

GRILLES

Grille Types

Choose the look of true divided light, or make cleaning easier by selecting grilles-between-the-glass.

Putty Glaze Integral Light Technology® with Ogee Interior[1] 5/8", 7/8" or 1-1/4"

Ogee Integral Light Technology®[1] 7/8", 1-1/4" or 2"

Aluminum Grilles- Between-the-Glass[2] 3/4"

Grilles-Between-the-Glass Interior Colors:[2]

Black | **White** | **Brown** | **Fossil** | **Ivory** | **Harvest** | **Cordovan**

GLASS

InsulShield® Low-E Glass[3]

Advanced Low-E insulating dual- or triple-pane glass with argon[4]

AdvancedComfort Low-E insulating dual-pane glass with argon

NaturalSun Low-E insulating dual- or triple-pane glass with argon[4]

NaturalSun+ Low-E insulating dual-pane glass with argon[4]

SunDefense™ Low-E insulating dual- or triple-pane glass with argon[4]

SunDefense+ Low-E insulating dual-pane glass with argon[4]

Additional Glass Options

Laminated (non-impact-resistant)[5,6], tinted[3,5] or obscure[3,5] glass also available on select products

STC (Sound Transmission Class)-improved dual-pane sound control glass[4,7]

Impact-Resistant glass[4,5]

ADDED PEACE OF MIND

Integrated Security Sensors

Choose optional, built-in security sensors powered by Insynctive® technology so you can monitor windows and doors while at home or away with the Pella Insynctive App.[8] Learn more at connectpella.com.

[1] Color-matched to your product's interior and exterior color.
[2] Appearance of exterior grille color may vary depending on the Low-E insulating glass selection.
[3] Optional high-altitude InsulShield Low-E glass is available with or without argon on select products.
[4] Available on select products only. See your local Pella sales representative for availability.
[5] Available with Low-E insulating glass with argon on select products.
[6] For best performance, the laminated glass may be in the interior or exterior pane of the insulating glass, depending on the product.
[7] Sound control glass consists of dissimilar glass thickness (5mm/3mm).
[8] Requires the Pella Insynctive App on a smart device, an Insynctive Bridge and a wireless home internet router with internet connection.

THE BEST LIMITED LIFETIME WARRANTY FOR WOOD WINDOWS AND PATIO DOORS*

Pella wood products are backed by the best limited lifetime warranty for wood windows and patio doors.* A ten-year limited warranty for Baldwin hardware is included. See written limited warranty for details, including exceptions and limitations, at pella.com/warranty.

NOTE: Product specifications may change without notice.
Actual colors may vary from those shown and products may vary slightly from illustrations and photos.

LEARN MORE AT PELLA.COM OR CALL 833-44-PELLA

---

* Based on comparing written limited warranties of leading national wood window and wood patio door brands. See Pella written Limited Warranty for details, including exceptions and limitations, at pella.com/warranty, or contact Pella Customer Service at 877-473-5527.

©2023 Pella Corporation. All rights reserved. PRT1123 | W358802

Arsenault, Caleb - PDCM

From: Jamieson, Payton - PDCU
Sent: Friday, September 26, 2025 4:16 PM
To: Arsenault, Caleb - PDCM
Subject: Re: Review for Accessory Structure Additions and Pool at 1718 Osceola Street

Caleb, no zoning issues!

From: Arsenault, Caleb - PDCM <CArsenault@coj.net>
Sent: Tuesday, September 16, 2025 11:47 AM
To: Jamieson, Payton - PDCU <PJamieson@coj.net>
Subject: RE: Review for Accessory Structure Additions and Pool at 1718 Osceola Street

Good morning,

Sure thing, thank you!

Best regards,

Caleb Arsenault, MHP
City Planner I
Historic Preservation Section | Planning Department
214 North Hogan Street, Suite 300
Jacksonville, FL 32202
Office: **904–255–7854**

From: Jamieson, Payton - PDCU <PJamieson@coj.net>
Sent: Tuesday, September 16, 2025 11:47 AM
To: Arsenault, Caleb - PDCM <CArsenault@coj.net>
Subject: Re: Review for Accessory Structure Additions and Pool at 1718 Osceola Street

Hi Caleb,

The plans didn't attach for 1718 Osceola Street. Can you send them to me to review?

Payton Jamieson
City Planner I
City of Jacksonville | Planning and Development Department
214 North Hogan Street, Suite 3047
Office : 904-255-7832

A NEW DAY.

From: Cox, Kaysie - PDCU <KaysieC@coj.net>
Sent: Tuesday, September 16, 2025 11:44 AM
To: Jamieson, Payton - PDCU <PJamieson@coj.net>
Cc: Wells, Arimus - PDCM <ArimusW@coj.net>; Arsenault, Caleb - PDCM <CArsenault@coj.net>; Corrigan, Connor - PDCU <CCorrigan@coj.net>
Subject: RE: Review for Accessory Structure Additions and Pool at 1718 Osceola Street

Payton,

Can you please review and respond? Let me or Connor know if you have any questions.

Kaysie Cox
City Planner Supervisor – Current Planning Division
City of Jacksonville | Planning Department
214 North Hogan Street, Suite 300
Jacksonville, FL 32202
Office: 904-255-7800

From: Arsenault, Caleb - PDCM <CArsenault@coj.net>
Sent: Tuesday, September 16, 2025 11:19 AM
To: Corrigan, Connor - PDCU <CCorrigan@coj.net>

Cc: Cox, Kaysie - PDCU <KaysieC@coj.net>; Wells, Arimus - PDCM <ArimusW@coj.net>
Subject: Review for Accessory Structure Additions and Pool at 1718 Osceola Street

Good morning,

At your earliest convenience, could you please have one of your planners review the attached plans for consistency with the Zoning Code? The property is 1718 Osceola Street.

Best regards,

Caleb Arsenault, MHP
City Planner I
Historic Preservation Section | Planning Department
214 North Hogan Street, Suite 300
Jacksonville, FL 32202
Office: **904–255–7854**

Arsenault, Caleb - PDCM

From: Arsenault, Caleb - PDCM
Sent: Tuesday, October 14, 2025 1:31 PM
To: 'Josiah Duff'; John Drum
Subject: RE: 1718 Osceola St + Reviews

Good afternoon,

To answer both of your questions in one message, yes this application is on track for next week's meeting. I will send out our Staff Report this Friday for your review, however we have conditioned the design to have a window at the center of the second floor façade on the right elevation and at the center of the first **and** second floor of the rear elevation. Because this differs from what you are proposing, this application would be placed on the COA agenda rather than the consent agenda unless you are fine with those conditions. I believe that those two conditions reflect the only differences between your proposal and our recommendations.

Best regards,

Caleb Arsenault, MHP
City Planner I
Historic Preservation Section | Planning Department
214 North Hogan Street, Suite 300
Jacksonville, FL 32202
Office: **904–255–7854**

From: Josiah Duff <Josiah@jaaarchitecture.com>
Sent: Tuesday, October 14, 2025 12:05 PM
To: John Drum <jdrum@jaaarchitecture.com>; Arsenault, Caleb - PDCM <CArsenault@coj.net>
Subject: RE: 1718 Osceola St + Reviews

EXTERNAL EMAIL: This email originated from a non-COJ email address. Do not click any links or open any attachments unless you trust the sender and know the content is safe.

Caleb,

Specifically - We want to know if excluding these windows will keep us from being put on the consent agenda.

A bit more background – We originally had windows in these locations, but after meeting with the fire marshal, we were told that these walls are so close to the property line that every window would have to be fire rated.
So, as it's an accessory structure in the rear yard, we opted to go for approval without the added cost and complexity.

Josiah

From: John Drum <jdrum@jaaarchitecture.com>
Sent: Tuesday, October 14, 2025 11:15 AM
To: Arsenault, Caleb - PDCM <CArsenault@coj.net>
Cc: Josiah Duff <Josiah@jaaarchitecture.com>
Subject: Re: 1718 Osceola St + Reviews

Caleb,
We are on track for the October Commission meeting next week. I am checking to see if you wanted to see these window suggestions changed on the plans or if the recommendations are part of the JHPC final order if things progress forward?
Thank you,
John

From: Arsenault, Caleb - PDCM <CArsenault@coj.net>
Sent: Wednesday, October 1, 2025 4:59:57 PM
To: John Drum <jdrum@jaaarchitecture.com>
Cc: Wells, Arimus - PDCM <ArimusW@coj.net>; Josiah Duff <Josiah@jaaarchitecture.com>
Subject: RE: 1718 Osceola St + Reviews

Good afternoon,

I was able to bring this application to our internal design review meeting this morning. Below is a summary of our recommendations to the proposed design:

- We recommend that windows be added to the right side of the accessory structure addition. Ideally, we recommend a full size 9/1 window on the first and second floor, however we understand that the spacing and use of the first floor as a garage may limit the placement of a window on the first floor.
- We recommend that windows be added to the rear side of the accessory structure addition. We recommend that 9/1 windows be added to the first and second floor of the addition on this side of the accessory structure.
- We recommend that garage doors have light openings along the top rather than being solid designs.

Below I have attached highlighted areas showing where we recommend adding the window openings:

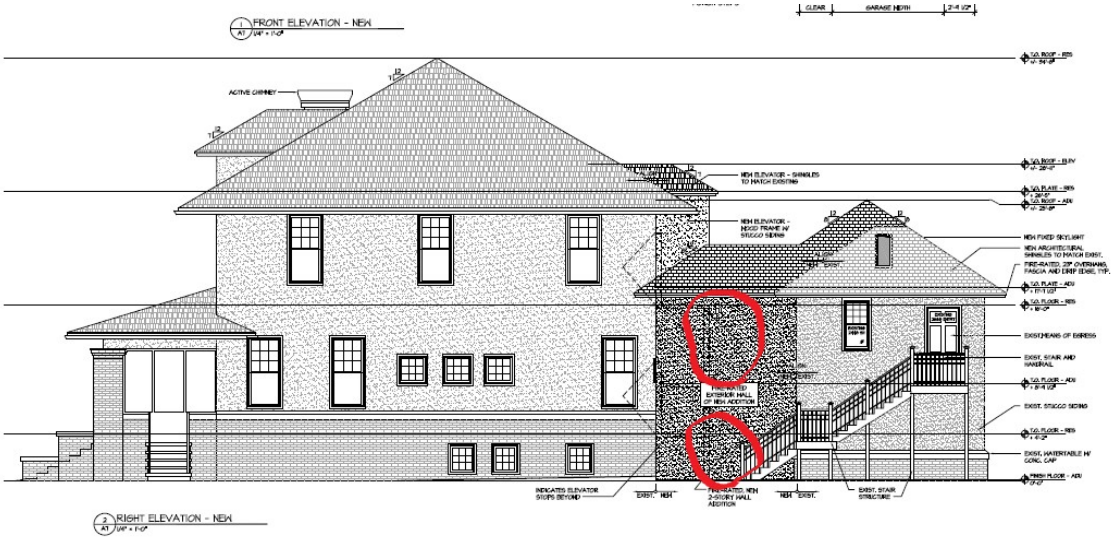

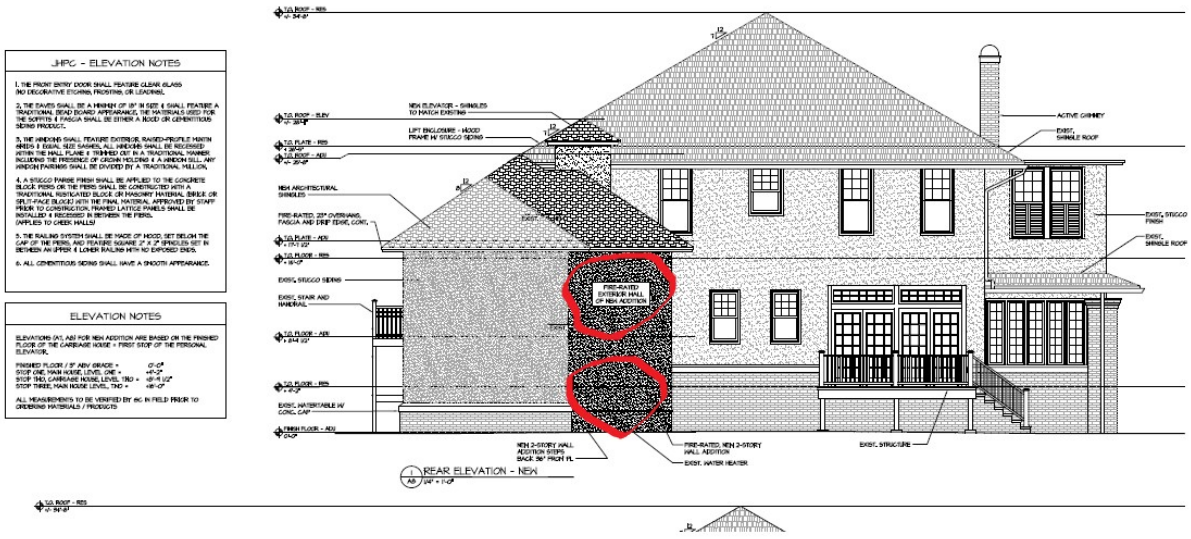

Best regards,

Caleb Arsenault, MHP
City Planner I
Historic Preservation Section | Planning Department
214 North Hogan Street, Suite 300
Jacksonville, FL 32202
Office: **904–255–7854**

From: Arsenault, Caleb - PDCM
Sent: Friday, September 26, 2025 10:27 AM
To: 'John Drum' <jdrum@jaaarchitecture.com>
Cc: Wells, Arimus - PDCM <ArimusW@coj.net>; Josiah Duff <Josiah@jaaarchitecture.com>
Subject: RE: 1718 Osceola St + Reviews

Good morning,

Received, thank you! I will return our comments on the proposed designs as soon as possible. In the meantime, I will prepare our Staff Report.

Best regards,

Caleb Arsenault, MHP
City Planner I
Historic Preservation Section | Planning Department
214 North Hogan Street, Suite 300
Jacksonville, FL 32202
Office: **904–255–7854**

From: John Drum <jdrum@jaaarchitecture.com>
Sent: Friday, September 26, 2025 10:14 AM
To: Arsenault, Caleb - PDCM <CArsenault@coj.net>
Cc: Wells, Arimus - PDCM <ArimusW@coj.net>; Josiah Duff <Josiah@jaaarchitecture.com>
Subject: Re: 1718 Osceola St + Reviews

EXTERNAL EMAIL: This email originated from a non-COJ email address. Do not click any links or open any attachments unless you trust the sender and know the content is safe.

Good Morning Caleb,

Please see the attached public notice signs and installation photos for the 1718 Osceola St / COA 25-32959

John Drum
JAA Architecture
(904) 379-5108 x 216

From: Arsenault, Caleb - PDCM <CArsenault@coj.net>
Sent: Tuesday, September 23, 2025 10:28 AM
To: John Drum <jdrum@jaaarchitecture.com>
Cc: Wells, Arimus - PDCM <ArimusW@coj.net>; Josiah Duff <Josiah@jaaarchitecture.com>
Subject: RE: 1718 Osceola St + Reviews

Good morning,

Received, thank you. The proposed scope of work requires review by the Jacksonville Historic Preservation Commission (JHPC). The sufficiency report for this application has been approved for the **October 22nd** meeting if the below deadlines are met.

Please be advised that **Application for Certificate of Appropriateness (COA-25-32959)** is now ready for payment. In order to submit the necessary materials for filing, please complete the following items:

- Attached is the invoice. The check(s) should be made out to the Tax Collector and can be paid at the Tax Collector's Office (**214 N. Hogan Street, 2nd Floor**).
- Please return a copy of the paid invoice to me via email or to the Historic Preservation Section (**214 N. Hogan Street, 3rd Floor**).
- The required public notice signs (**2, along all streets the property fronts)** and affidavit are also ready for pick-up. The signs are located outside the elevators on the 3rd floor in the Ed Ball building (214 N. Hogan St). The signs will need to be posted by **October 8th**. Please send a copy of the signed affidavit as well as pictures of the signs posted on each of the street facing sides of the property.

So long as we receive the receipt of payment by **September 26th** your application can be scheduled for the Jacksonville Historic Preservation Commission (JHPC) meeting on **October 22nd.**

Best regards,

Caleb Arsenault, MHP
City Planner I
Historic Preservation Section | Planning Department
214 North Hogan Street, Suite 300
Jacksonville, FL 32202
Office: **904–255–7854**

From: John Drum <jdrum@jaaarchitecture.com>
Sent: Monday, September 22, 2025 12:02 PM
To: Arsenault, Caleb - PDCM <CArsenault@coj.net>
Cc: Wells, Arimus - PDCM <ArimusW@coj.net>; Josiah Duff <Josiah@jaaarchitecture.com>
Subject: Re: 1718 Osceola St + Reviews

EXTERNAL EMAIL: This email originated from a non-COJ email address. Do not click any links or open any attachments unless you trust the sender and know the content is safe.

Good Morning Caleb,

Part Two - Supplemental Information for the 1718 Osceola St COA application as requested:

- Photo montage for overall site attached
- Photo montage for area of addition attached

Please let me know if I may provide any further information or clarifications.

John Drum
JAA Architecture
(904) 379-5108 x 216

From: Arsenault, Caleb - PDCM <CArsenault@coj.net>
Sent: Tuesday, September 16, 2025 2:24 PM
To: John Drum <jdrum@jaaarchitecture.com>; Josiah Duff <Josiah@jaaarchitecture.com>
Cc: Wells, Arimus - PDCM <ArimusW@coj.net>
Subject: RE: 1718 Osceola St + Reviews

Good afternoon,

My apologies, in addition to the previously requested items, the following are required in order to review and meet sufficiency as well:

- Overall photos of the site
- Photos of the areas of addition

Best regards,

Caleb Arsenault, MHP

City Planner I

Historic Preservation Section | Planning Department

214 North Hogan Street, Suite 300

Jacksonville, FL 32202

Office: **904–255–7854**

From: Arsenault, Caleb - PDCM
Sent: Tuesday, September 16, 2025 2:18 PM
To: John Drum <jdrum@jaaarchitecture.com>; 'JOSIAH@JAAARCHITECTURE.COM' <JOSIAH@JAAARCHITECTURE.COM>
Cc: Wells, Arimus - PDCM <ArimusW@coj.net>
Subject: RE: 1718 Osceola St + Reviews

Good afternoon,

I have been assigned to review your application for a **Certificate of Appropriateness (COA)**. I have forwarded the plans to the **Current Planning Division** for their review while we review the proposed design. In the meantime, please provide the following so that we can fully review the proposed alterations:

- Please provide the correct owner information so that we can update the application appropriately
- Please provide the product information for the proposed doors, garage doors, windows, railing, etc.
- Please provide dimensions on the site plan, including the dimensions of the pool, the proposed additions, etc.

Best regards,

Caleb Arsenault, MHP

City Planner I

Historic Preservation Section | Planning Department

214 North Hogan Street, Suite 300

Jacksonville, FL 32202

Office: **904–255–7854**

From: Wells, Arimus - PDCM <ArimusW@coj.net>
Sent: Tuesday, September 16, 2025 10:56 AM
To: John Drum <jdrum@jaaarchitecture.com>
Cc: Arsenault, Caleb - PDCM <CArsenault@coj.net>
Subject: RE: 1718 Osceola St + Reviews

Good Morning, John,

Awesome, thank you. Your application has been assigned to Caleb.

Best Regards,

Arimus

--

Arimus T. Wells, MPA

City Planner Supervisor

Historic Preservation Section

Planning Department

214 North Hogan Street, Suite 300

Jacksonville, FL 32202

Office: 904-255-7824

From: John Drum <jdrum@jaaarchitecture.com>
Sent: Monday, September 15, 2025 3:36 PM
To: Wells, Arimus - PDCM <ArimusW@coj.net>
Subject: Re: 1718 Osceola St + Reviews

EXTERNAL EMAIL: This email originated from a non-COJ email address. Do not click any links or open any attachments unless you trust the sender and know the content is safe.

Good Afternoon Arimus,

I have uploaded this renovation to the portal for the addition we reviewed with you last month in hopes of getting on the consent agenda. This was the 2 story garage addition in the SJQ with a small personal elevator and wood deck connecting it to the main house.

Thank you,

John

John Drum
JAA Architecture

(904) 379-5108 x 216

From: Wells, Arimus - PDCM <ArimusW@coj.net>
Sent: Friday, August 8, 2025 10:13 AM
To: Wells, Arimus - PDCM <ArimusW@coj.net>; John Drum <jdrum@jaaarchitecture.com>; John Allmand <john@jaaarchitecture.com>; Josiah Duff <Josiah@jaaarchitecture.com>; Koleyan Oun <koleyan@jaaarchitecture.com>
Subject: RE: 1718 Osceola St + Reviews
When: Wed 8/13/2025 10:30 AM - 11:30 AM
Where: Ed Ball Building, 214 N. Hogan St, 3rd Floor

Hi Arimus,

We have a few projects that we'd like to review with you prior to the next Commission submission/meeting. What availabilities do you have next week that we may schedule a JAA meeting for? Koleyan from our office will coordinate John Allmand's schedule.

1718 Osceola St

1339 Challen Ave

3849/3855 Riverside Ave.

Thank you,

John

John Drum

Project Manager

JAA Architecture, Inc.

License: AR92748

2063 Oak Street • Jacksonville, FL 32204
904-379-5108 x 216
jdrum@jaaarchitecture.com
www.jaaarchitecture.com

COA-25-32709

1206 Hubbard St

October 22, 2025

Report of the Jacksonville Planning and Development Department
Certificate of Appropriateness Application COA-25-32709

Address: 1206 Hubbard Street, RE# 072993-0000

Location: Northwest corner of Hubbard Street and 2nd Street East

Owner: JoAnn Tredennick
1206 Hubbard Street
Jacksonville, FL 32206

Applicant: JoAnn Tredennick
1206 Hubbard Street
Jacksonville, FL 32206

Year Built: *c.*1890

Designation: Springfield

Request: Alterations - Reroof

Summary Scope of Work:

1. Reroof with slate-like material on primary structure (JHPC)

Recommendation: **Approve with Conditions**

Conditions:

Reroof

1. The roofing material shall be the synthetic slate roof tile submitted by the applicant and match the pattern that is historically documented on the roof.
2. The use of synthetic slate-like material shall only replace the existing asphalt shingled section of the roof. The turret is not part of this reroofing application.
3. If any deteriorated wood visible from the exterior needs to be repaired (rafter ends, soffits, fascia, etc.) during the course of the work, the repairs shall be made with like materials. If wholesale replacement is necessary and the existing materials are not historic, then the replacement materials shall be historically appropriate.
4. The roofing materials shall not be stacked on the roof in one location. Historic structures are often fragile, and the roof cannot support the weight of a large stack of shingles in one location. Severe damage to the structure may result.

PROJECT DESCRIPTION

COA-25-32709 seeks to install a slate-like roof on the structure at 1206 Hubbard Street, a contributing structure within the Springfield Historic District. The subject site is a rectangular-shaped corner lot which has access off 2nd Street and Hubbard Street. The scope of work would involve the removal of the existing asphalt shingles that are currently on the main part of the structure. The replacement material will be of a synthetic slate roof tile that reflects the design of a slate roof tile. This was chosen by the applicant to match the existing real slate roof tiles that are on the turret attached the structure. The synthetic roof tile would be installed to have a similar pattern to the existing asphalt shingles.

STAFF SUMMARY AND ANALYSIS

Staff considered the applicable Design Guidelines for the Historic District and the Ordinance Code criteria found in Sections 307.106(k) and 307.106(l). The following is Staff's analysis:

- The structure existing at 1206 Hubbard Street is shown on the 1897 Sanborn map as being two-and-a-half stories tall with a three-story turret with roofing material that can be determined to be metal, slate tile, and/or asbestos shingles. This is denoted with the open circle on each of the roof surfaces as a non-combustible roofing material. The one-story wraparound porch has been also shown to be shingled with no material noted.
- The recorded roofing material listed on the Florida Master Site File (FMSF) form from 1975 during the survey of the Springfield Historic District states that it was asbestos shingles.

There was no mention of slate roofing material on the turret and additionally, there were no previous permits submitted before 2003 referencing reroofing of any kind.

- In 2003, a reroof permit was submitted that determined that the turret had a slate roof that needed to be replaced when the applicant took ownership that same year.
- The Historic District Design Guidelines for the Springfield Historic District references "Roofs and Roof Surfaces" and lists Standards Two, Six, and Nine of the *Secretary of the Interior's Standards for Rehabilitation*.
    - Standard Two refers to how the removal of historic characteristics of the property shall be avoided. In the proposed replacement with slate-like material, the design of the shingles will be similar to that of the existing asphalt shingles. This maintains consistency with Standard Two.
    - Standard Six refers to how features requiring replacement shall be replaced with those that match the design with documentation if it differs from the existing material. Based on documentation that was found from Sanborn Maps and historic photos, the roof was shingled in design and was made of a non-combustible material. The turret has been documented as having a slate roof with the main structure having asbestos shingles. Consistent with Standard Six, the proposed slate-like roof material will allow a continuous design of the roof to match the existing slate roof in design, pattern, and texture.
    - Standard Nine refers to the exterior alterations that are made shall not destroy the historic materials that characterize the property. The proposed slate-like shingles were chosen as a way to further protect the home from damage while also complimenting the existing architectural characteristics of the slate roof on the turret on the structure. These proposed exterior alterations are consistent with Standard Nine.
- Although the Springfield Historic District Guidelines specifically call out the typical roofing materials for the Queen Anne architectural style, the home has documentation of a slate roof on the turret that has been a part of its material list of prominent architectural features for over 20 years per COA-03-776. The proposed slate-like material for the remaining part of the roof to replace the asphalt shingles will extend this architectural detail throughout the structure. This will not detract from its architectural significance and allow it to be consistent with Section 307.106(l)(1-3).
- The proposed work can be completed within a reasonable period of time, consistent with Section 307.106(l)(4).
- Consistent with Section 307.106.(k)(2, 3, and 4) the proposed alterations of the roofing material honor the attached turret that has been a prominent feature of the home ever since it was constructed in the late 1890s. The slate roof that is on this feature has remained part of the structure since the applicant owned the home and was a noted feature before they had obtained ownership. The proposed slate-like material will match the pattern of the asphalt shingle and will not create a large discrepancy in appearance when installed.

- Consistent with Section 307.106(k)(6) the proposed installation of slate-like material to extend the feature that appears on the roof of the turret is based on the pictorial evidence found attached with the FMSF form from the initial survey of the Historic District.
- Ever since the applicant owned the home in 2003, this Queen Anne styled residential home was revitalized and restored very close to its original and former glory over the years. Proper maintenance and processes have been followed to ensure that this structure maintains its significance as part of the Springfield Historic District. The changes that have been made over time have been based on historical documentation and proper research. This further contributes to this proposed alteration being consistent with Section 307.106(k)(8).

For these reasons, it is the position of the Planning and Development Department that the proposed work under the stated conditions is consistent with:

- Section 307.106(l) General Standards: 1, 2, 3, and 4
- Section 307.106(k) Guidelines on Alterations: 2, 3, 4, 6, and 8
- Historic District Design Guidelines, Section on "Roofs and Roof Surfaces"

CODE CRITERIA AND DESIGN GUIDELINES

General Criteria

- 307.106(k)(1) - The effect of the proposed work on the landmark, landmark site or property within an historic district upon which such work is to be done;

- 307.106(k)(2) - The relationship between such work and other structures on the landmark site or other property in the historic district;

- 307.106(k)(3) – The extent to which the historic, architectural, or archaeological significance, architectural style, design, arrangement, texture and materials of the landmark or the property will be affected;

- 307.106(k)(4) - Whether the plans may be carried out by the applicant within a reasonable period of time.

Alterations

- 307.106(l)(2) – The distinguishing original qualities or character of a building, structure, or site shall not be destroyed. The removal or alteration of any historic material or distinctive architectural features shall be avoided when possible.

- 307.106(l)(3) – Each building, structure, and site shall be recognized as a product of its own time. An alteration which has no historical basis and which seeks to create an earlier appearance shall be discouraged.

- 307.106(l)(4) – Changes which may have taken place in the course of time are evidence of the history and development of a building, structure, or site. These changes may have

acquired significance in their own right, and this significance shall be recognized and respected.

- 307.106(l)(6) – Deteriorated architectural features shall be repaired rather than replaced, wherever possible. In the event replacement is necessary, the new material shall match the material being replaced in composition, design, color, texture, and other visual qualities. However, technologically advanced materials shall be considered and used as replacement alternatives. Repair or replacement of missing architectural features shall be based on accurate duplications of features, substantiated by historical, physical, or pictorial evidence rather than on conjectural designs or the availability of different architectural elements from other buildings or structures.

- 307.106(m)(8) - *Architectural details.* Architectural details including materials and textures shall be treated so as to make a landmark compatible with its original architectural style and character and to preserve and enhance the architectural style or character of a landmark or historic district. The Commission will give recommendations as to appropriate colors for any landmark or historic district.

Historic District Design Guidelines, "Roofs and Roof Surfaces"

- Secretary of the Interior's Standards for Rehabilitation (2): The historic character of a property shall be retained and preserved. The removal of historic materials or alteration of features and spaces that characterize a property shall be avoided.

- Secretary of the Interior's Standards for Rehabilitation (6): Deteriorated historic features shall be repaired rather than replaced. Where the severity of deterioration requires replacement of a distinctive feature, the new feature shall match the old in design, color, texture and other visual qualities and, where possible, materials. Replacement of missing features shall be substantiated by documentary, physical or pictorial evidence.

- Secretary of the Interior's Standards for Rehabilitation (9): New additions, exterior alterations, or related new construction shall not destroy historic materials that characterize the property. The new work shall be differentiated from the old and shall be compatible with the massing, size, scale, and architectural features to protect the historic integrity of the property and its environment.

LOCATION MAP

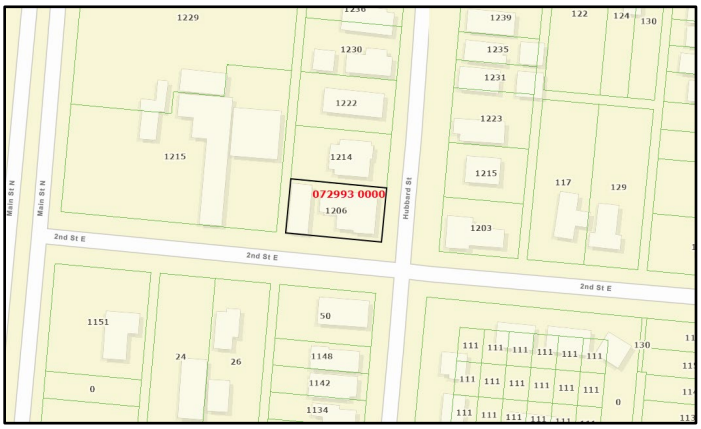

JACKSONVILLE SANBORN MAP SCREENSHOT

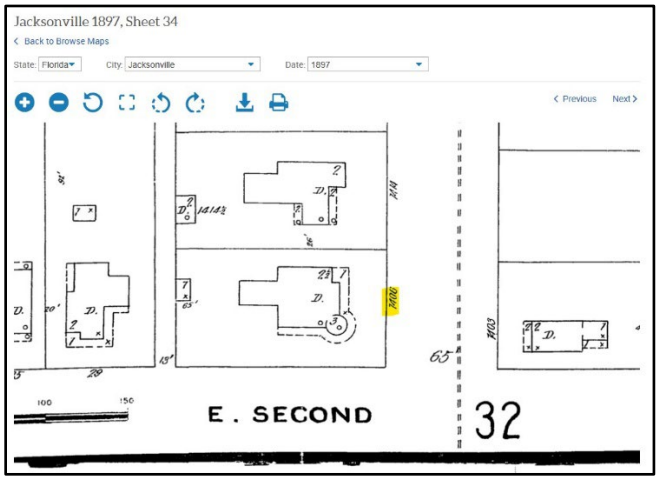

(Sanborn Map, Jacksonville 1897, Sheet 34)

CLOSE-UP OF SUBJECT PROPERTY ON SANBORN MAP

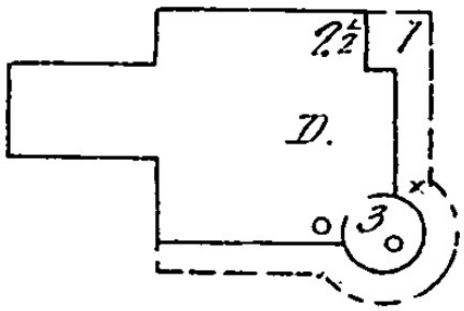

(Sanborn Map, Jacksonville 1897, Sheet 34)

PICTURES OF PROPERTY WITH POSTED SIGN

PICTURES OF SUBJECT PROPERTY

PROPOSED MATERIAL SPECS FROM BRAVA WITH EXAMPLE OF INSTALLATION

Application For Certificate Of Appropriateness

Application Info

Tracking #	32709	**Application Status**	FOUND SUFFICIENT
Date Started	07/22/2025	**Date Submitted**	07/26/2025

Planning and Development Department Info

COA # COA-25-32709

Admin Review ☑

Admin Recommendation FORWARD

Admin Date Of Action 8/14/2025

Forwarded to JHPC ☑

JHPC Meeting Date 10/22/2025

Staff Recommendation N/A

JHPC Recommendation N/A

JHPC Date Of Action N/A

Admin Details
N/A

JHPC Details
N/A

General Information On Applicant

Last Name TREDENNICK **First Name** JOANN **Middle Name**

Company Name

Mailing Address 1206 HUBBARD ST.

City JACKSONVILLE **State** FL **Zip Code** 32206

Phone 904 860 5158 **Fax** **Email** JOANN.TREDENNICK@GMAIL.COM

General Information On Owner(s)

Agent represents ◉ Owner ○ Contractor ○ Architect ○ Consultant ○ Other

Last Name TREDENNICK **First Name** JOANN **Middle Name**

Company/Trust Name

Mailing Address 1206 HUBBARD ST.

City JACKSONVILLE **State** FL **Zip Code** 32206

Phone 9048605158 **Fax** **Email** JOANN.TREDENNICK@GMAIL.COM

Agent represents ○ Owner ○ Contractor ○ Architect ○ Consultant ◉ Other

Last Name MEEKS **First Name** JACK **Middle Name**

Company/Trust Name

Mailing Address 1206 HUBBARD ST

City	State	Zip Code
JACKSONVILLE	FL	32206

Phone	Fax	Email
9042105742		JMEEKS@JACKMEEKSCPA.COM

Description Of Property

Property Appraiser's RE #(s) (10 digit number with a space ###### ####)

Map	RE#
	072993 0000

Location Of Property

General Location
Springfield Historic District

House #	Street Name, Type and Direction	Zip Code
1206	HUBBARD ST	32206

Type Of Improvement

- ☐ **Addition**
- ☐ **Driveway**
- ☐ **New Construction**
- ☐ **Accessory Structures**
- ☐ **Alteration**
- ☐ **Relocation**
- ☐ **Window Replacement**
- ☐ **Other/Minor Repairs**
- ☐ **Fencing**
- ☐ **Demolition**
- ☑ **Reroof**

Existing Roof Material Composition Shingles (3 Tab/Architectural)

Proposed Roof Material Other

If there is more than one roof material on the structure, please apply for a separate COA.

Structure Type Primary Structure

Describe proposed work below. Note affected features and changes in design or materials. Be as specific, brief, and legible as possible.
(Example: reroof; replacing gray 3-tab shingles with black architectural shingles).

Proposed Work

Addition Information

Is this a violation? Check the box if it is. ☐

If you have been working with a planner choose one from the list

Reroof/Minor Repairs

For reroofs and minor repairs there are no required documents. However, once a planner is assigned and reviews the request, they may need additional documents or pictures to process your request.

Additional Documents Provided

Application Certification

For applications that can be approved administratively, there is no application fee.

For all applications that must go before the Historic Preservation Commission, a fee will be applied based on the type of work performed.

Application completeness review: All applications for Certificate of Appropriateness ("Application") will be reviewed for completeness by Planning and Development Department Staff. Any Application determined to be incomplete, will be returned to the applicant with comments detailing the deficiencies. No further action on the Application will take place until the application deficiencies are addressed. Once the Application is determined to be complete, Planning and Development Department Staff will prepare an invoice for the cost of the Application.

Payment deadline: The Invoice must be paid by the payment deadline in order to have the Application heard on the next scheduled Jacksonville Historic Preservation Commission (JHPC) regular meeting. The payment deadline is outlined on the City of Jacksonville's Planning and Development Department Website. Only sufficient applications will be invoiced. It is for the benefit of the applicant to supply staff with a sufficient applications in advance of the payment deadline. Due to the complexity and volume of Applications received by the Planning and Development Department, there is no guarantee that COA Applications submitted on the day of the payment deadline will be heard at the next regular meeting of the JHPC.

I, hereby, certify that I am the owner or the authorized agent of the owner(s) of the property described herein, that all answers to the questions in this application and all information contained in the material attached to and made a part of this application, are accurate and true to the best of my knowledge and belief. I also attest by my signature that all required information for this application is completed and duly attached in the prescribed order. Furthermore, if the package is found to be lacking the above requirements, I understand that the application will be returned for correct information.

☑ I UNDERSTAND THE ABOVE DISCLAIMER REGARDING APPLICATION REVIEW. I UNDERSTAND THE ABOVE DISCLAIMER REGARDING APPLICATION REVIEW. AGREED TO AND SUBMITTED.

MEEKS JACK L
1206 HUBBARD ST
JACKSONVILLE, FL 32206-5022

2024

R-072993-0000

PRINTED 10/10/2024
BY: pao

Map Id: 6412 101100.22 1.05 1.00 1.00 SE SPRINGFIELD

BUILDING CHARACTERISTICS

CATEGORY	TYPE	%	PTS
Exterior Wall	4 SINGLE SIDING	75	21.00
Exterior Wall	14 WOOD SHINGLE	25	10.00
Roof Struct	3 GABLE OR HIP	100	6.00
Roofing Cover	3 ASPH/COMP SHNG	100	4.00
Interior Wall	5 DRYWALL	100	28.00
Int Flooring	12 HARDWOOD	100	13.00
Heating Fuel	4 ELECTRIC	100	1.00
Heating Type	4 FORCED-DUCTED	100	4.00
Air Cond	3 CENTRAL	100	7.00

CATEGORY	UNITS	ADJ
Stories	3.00	0
Bedrooms	5.00	0
Baths	3.50	0
Rooms / Units	1.00	0

BASE RATE ADJ	ADJ
Quality Adjustment	1.4500
Mkt/Design Factor	1.0000
Size Adj.	0.9000
TOTAL ADJUSTED POINTS	133
DEPRECIATION ADJ	ADJ

TYPE	STYLE	CLS	QUA	HX %	NHX %	LOC	% COMP
0104	01	4	05	100.00	0.00	1.00	100

REPL. COST NEW	AYB	EYB	DT	NORM	% GOOD
542,314	1899	2000	R2	14.50	85.50%

SAR	AREA	B	H	P.of B.	EFF. AREA	DPR VALUE
BAS	1,744		X	100	1,744	191,579
FOP	711			30	213	23,398
FUA	2,349		X	95	2,232	245,186
USP	130			25	32	3,515
	4,934			4,093	4,221	$463,678

ACREAGE 0.00 PRICE/SF 109.85

0100 Single Family

** VALUE SUBJECT TO CHANGE **

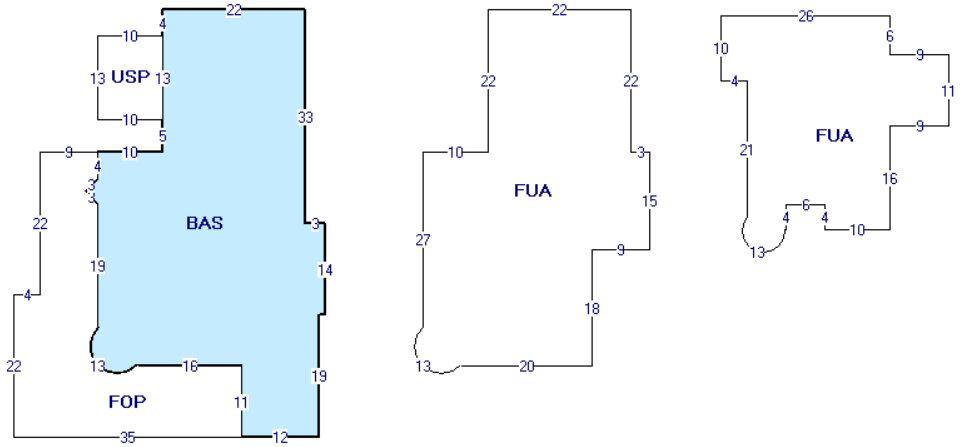

BUILDING: 1 AKA:

SITE ADDRESS: 1206 HUBBARD ST JACKSONVILLE 32206- 0104 SFR 3 STORY

Duval County Property Appraisers Office Tax Dist USD1

VALUE SUMMARY

PRIMARY VALUATION METHOD	CAMA
BUILDING VALUE	533,632
EXTRA FEATURE VALUE	2,551
TOTAL MARKET LAND VALUE	112,035
MARKET VALUE OF AG LAND	0
TOTAL LAND VALUE AG + COMMON	0
MARKET VALUE	648,218
ASSESSED VALUE	356,811
CAP BASE YEAR	2006
TAXABLE VALUE	306,811
EXEMPTIONS	HB HX
TOTAL EXEMPTIONS VALUE	50,000
SENIOR EXEMPTION VALUE	0
SR/HISTORIC TAXABLE VALUE	N/A

PERMIT NO.	TP	ST.	DESCRIPTION	EST VALUE	ISSUE DATE
B14663866	ALTS	C	INSTALL LOAD	18,200	10/23/2014
31072	ALTS	C		30,000	06/03/2005
53319	BLDG			90,000	09/29/2003

BUILDING DIMENSIONS

FUA:135,1:=W26 S10 E4 S21 D2R6F225 N4 E6 S4 E10 N1 6 E9 N11 W9 N6 $ FUA:95,0:=W22 S22 W10 S27 D6R6F1 80 E20 N18 E9 N15 W3 N22 $ BAS:45,0:=W22 S4 S18 W 10 S4 D2L2 D2R2 S19 D6R6F180 E16 S11 E12 N19 E1 N1 4 W3 N33 $ USP:23,4:=W10 S13 E10 N13 $ FOP:13,22 :=W9 S22 W4 S22 E35 N11 W16 U6L6G180 N19 U2L2 U2R2 N4 $.

BUILDING NOTES

LN	VOLUME / YEAR	PAGE / CLERK	DATE OF SALE	IN	QU	VI	RE	SALES PRICE	NOTE AMOUNT	MAC	MAC AMOUNT	GRANTOR	GRANTEE	SALES NOTE
1	11112	00678	05/16/2003	WD	Q	I	02	280000	0	N	0	ALBAO NORMAN P		20030602
2	08879	01503	03/05/1998	WD	Q	I	02	130000	0	N	0	CONTARINI OSVALDO		980401
3	06146	01183	06/13/1986	WD	U	I	01	82000	0	N	0			
4	05650	00790	05/13/1983	WD	U	I	11	65000	0	N	0			

LN	OB/XF CODE	DESCRIPTION	BLD	HX %	NHX %	LENGTH	WIDTH	UNITS	GRADE	FACTOR	UNIT PRICE	ADJ UNIT PRICE	ORIG COND	ACTUAL YEAR	EFF YEAR	YEAR ON ROLL	% COND	OB/XF MKT VALUE
1	FPMR7	Fireplace Masonry	1	100.00	0.00	0	0	2.00	5	100	4,398.75	6,378.19	100	1970	1970		20	2,551

APPRAISAL DATES	DATE	APPRAISED BY
BUILDING	01/19/2006	JMB
LAND LINES	07/12/1993	KJP
VALUE REVIEW	05/06/2024	EMP
TRIENNIAL	05/19/2010	EAG
INCOME		

LT	LN	USE CODE	LAND USE DESCRIPTION	HX %	NHX %	RD	LOC ZONE	FRONT	DEPTH	SIZE FACTOR	UNITS	UNIT TYPE	DT	DPTH FACT	COND FACTOR	UNIT PRICE	ADJ UNIT PRICE	LAND VALUE
C	1	0101	RES MD 8-19 UNITS PER AC	100.00	0.00		RMD-S	70.00	125.00	100.00	70.00	F	1	0.97	1.00	1,650.00	1,600.50	112,035

LN	DATE	BLD	USER ID	CD	PARCEL NOTES

BUILDING CHARACTERISTICS

0100 Single Family

** VALUE SUBJECT TO CHANGE **

CATEGORY	TYPE	%	PTS
Exterior Wall	4 SINGLE SIDING	100	28.00
Roof Struct	3 GABLE OR HIP	100	6.00
Roofing Cover	3 ASPH/COMP SHNG	100	4.00
Interior Wall	5 DRYWALL	100	28.00
Int Flooring	8 SHEET VINYL	100	5.00
Heating Fuel	4 ELECTRIC	100	1.00
Heating Type	4 FORCED-DUCTED	100	4.00
Air Cond	3 CENTRAL	100	7.00

CATEGORY	UNITS	ADJ
Stories	2.00	0
Bedrooms	1.00	0
Baths	1.00	0
Rooms / Units	1.00	0

BASE RATE ADJ	ADJ
Quality Adjustment	1.0000
Mkt/Design Factor	1.0000
Size Adj.	1.0900
TOTAL ADJUSTED POINTS	102
DEPRECIATION ADJ	ADJ

TYPE	STYLE	CLS	QUA	HX %	NHX %	LOC	% COMP
0106	01	4	03	100.00	0.00	1.00	100

REPL. COST NEW	AYB	EYB	DT	NORM	% GOOD
90,263	2004	2004	R3	22.50	77.50%

SAR	AREA	B	H	P.of B.	EFF. AREA	DPR VALUE
BAS	644		X	100	644	46,636
FGR	644			50	322	23,318
	1,288		644		966	$69,954

ACREAGE 0.00 PRICE/SF 72.42

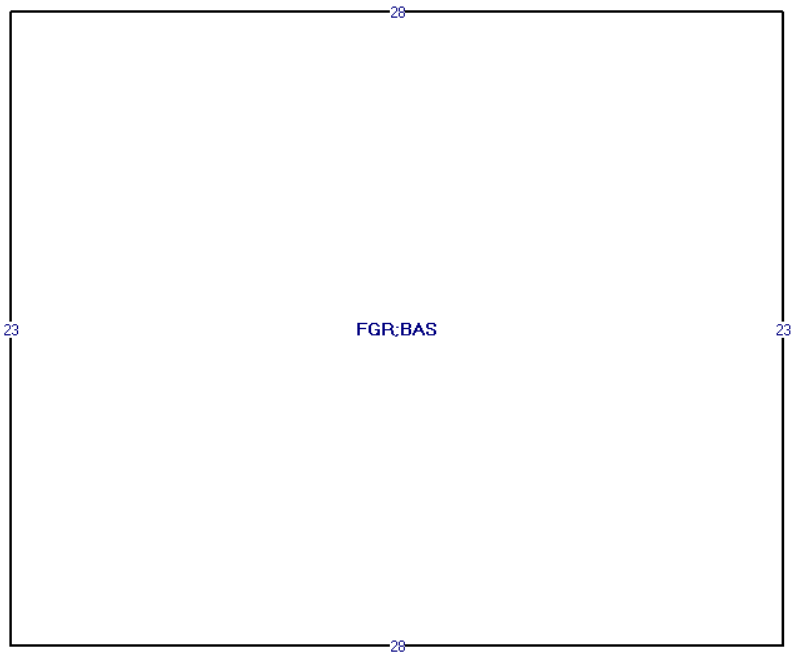

BUILDING: 2 AKA:

SITE ADDRESS: 1206 HUBBARD ST, JACKSONVILLE 32206- 0106 GARAGE APT

Duval County Property Appraisers Office Tax Dist USD1

VALUE SUMMARY

PRIMARY VALUATION METHOD	CAMA
BUILDING VALUE	533,632
EXTRA FEATURE VALUE	2,551
TOTAL MARKET LAND VALUE	112,035
MARKET VALUE OF AG LAND	0
TOTAL LAND VALUE AG + COMMON	0
MARKET VALUE	648,218
ASSESSED VALUE	356,811
CAP BASE YEAR	2006
TAXABLE VALUE	306,811
EXEMPTIONS	HB HX
TOTAL EXEMPTIONS VALUE	50,000
SENIOR EXEMPTION VALUE	0
SR/HISTORIC TAXABLE VALUE	N/A

PERMIT NO.	TP	ST.	DESCRIPTION	EST VALUE	ISSUE DATE
B14663866	ALTS	C	INSTALL LOAD	18,200	10/23/2014
31072	ALTS	C		30,000	06/03/2005
53319	BLDG			90,000	09/29/2003

BUILDING DIMENSIONS

FGR;BAS(L28 D23 R28 U23).

BUILDING NOTES

LN	VOLUME / YEAR	PAGE / CLERK	DATE OF SALE	IN	QU	VI	RE	SALES PRICE	NOTE AMOUNT	MAC	MAC AMOUNT	GRANTOR	GRANTEE	SALES NOTE
1	11112	00678	05/16/2003	WD	Q	I	02	280000	0	N	0	ALBAO NORMAN P		20030602
2	08879	01503	03/05/1998	WD	Q	I	02	130000	0	N	0	CONTARINI OSVALDO		980401
3	06146	01183	06/13/1986	WD	U	I	01	82000	0	N	0			
4	05650	00790	05/13/1983	WD	U	I	11	65000	0	N	0			

LN	OB/XF CODE	DESCRIPTION	BLD	HX %	NHX %	LENGTH	WIDTH	UNITS	GRADE	FACTOR	UNIT PRICE	ADJ UNIT PRICE	ORIG COND	ACTUAL YEAR	EFF YEAR	YEAR ON ROLL	% COND	OB/XF MKT VALUE

APPRAISAL DATES

	DATE	APPRAISED BY
BUILDING		
LAND LINES	07/12/1993	KJP
VALUE REVIEW	05/06/2024	EMP
TRIENNIAL	05/19/2010	EAG
INCOME		

LT	LN	USE CODE	LAND USE DESCRIPTION	HX %	NHX %	RD	LOC ZONE	FRONT	DEPTH	SIZE FACTOR	UNITS	UNIT TYPE	DT	DPTH FACT	COND FACTOR	UNIT PRICE	ADJ UNIT PRICE	LAND VALUE

LN	DATE	BLD	USER ID	CD	PARCEL NOTES

City of Jacksonville, Florida

Planning Department

Community Planning Division
214 North Hogan Street, Suite 300
Jacksonville, FL 32202
(904) 255-7800
www.coj.net

ONE CITY. ONE JACKSONVILLE.

NOTICE OF PUBLIC HEARING SIGN POSTING AFFIDAVIT FOR APPLICATION FORWARDED TO THE JACKSONVILLE HISTORIC PRESERVATION COMMISSION

Date: _____

Address: _____

COA#: COA-25-32709

Owner: JoAnn Tredennick and Jack Meeks

As required by Sec. 307.106.(f) of the City of Jacksonville Ordinance Code: The applicant for a certificate of appropriateness shall post signs at intervals of not more than 200 feet along all street sides of land upon which the request for a certificate of appropriateness is made. Signage should be posted at least 14 days prior to the scheduled public hearing. Where the land does not have frontage on a public street, the signs shall be erected on the nearest street right-of-way with an attached notation indicating generally the direction and distance to the land upon which the application for a certificate of appropriateness has been filed, or at such other locations and at such intervals, as determined by the Planning and Development Department, as will ensure that the signs will be seen by as many persons as possible. The signs shall be maintained by the applicant until a final determination has been made by the Commission on the application for a certificate of appropriateness. If the signs are not posted within the time requirements, the public hearing notice will be deemed inadequate and no action shall be taken until proper posting is accomplished. The signs shall be removed by the applicant within ten days after final action.

I hereby attest that the attached pictures show the NOTICE OF PUBLIC HEARING SIGNS

provided to me for application 32709 were posted on the property/site located at:

072993 0000
Real Estate Number(s)

1206 Hubbard St.
Street Address

Jacksonville, FL 32206
City, State Zip Code

Printed Name JoAnn Tredennick

Signature JoAnn Tredennick

Dated this 3 day of October, 20 25

D. Previously Deferred Items to be Heard

Jacksonville
Historic Preservation
Commission

COA-25-32249

1552 Pearl St N

August 27, 2025

Revised Report of the Jacksonville Planning Department
Certificate of Appropriateness Application COA-25-32249

Address: 1552 North Pearl Street, RE# 071164-0000

Location: West side of North Pearl Street, between West 5th Street and West 6th Street

Owner: Lauren Prater
10752 Deerwood Park Boulevard, Suite 100
Jacksonville, Florida 32256

Applicant: Same as Owner

Year Built: *c.* 1910 *(Florida Master Site File)*

Designation: Springfield; Contributing

Request: Alteration - Window Replacement

Summary Scope of Work:

1. Replacement of twenty-three (23) wood 1-over-1 windows with a vinyl replacement product

Recommendation: **Approve with Conditions**

Conditions:

Window Replacement of 23 Windows

1. As depicted on the pictures submitted by the applicant, the only windows approved for replacement are windows numbered 1-23.
2. The lozenge windows on the first-floor front elevation shall not be replaced.
3. All new windows shall fit the original openings both horizontally and vertically and be recessed **2 - 4 inches** within the opening (not flush with the wall or have permanent nailing fins).
4. Any sash-style window groupings shall have traditional 4-6 inch flat mullions between window units.
5. All new windows shall be vinyl, wood, wood clad, and/or wood blend.
6. All windows shall be installed in accordance with the latest version of the HPS Window Supplement.

General Conditions

7. All preparation for painting shall utilize gentle means such as hand scraping/sanding, heat guns, and strippers. No abrasive cleaning methods such as rotary sanding, sandblasting, extreme high-pressure washing, or torches shall be used.
8. Any exterior trim work, including traditional sill, sideboards, and header with crown molding, shall be retained or replicated in wood or cementitious materials, but not vinyl.
9. Prior to the final inspection of any building permit, the owner or their agent shall submit to the Historic Preservation Section an affidavit and any supplementary evidence that verifies compliance with all conditions of the COA Final Order.

PROJECT DESCRIPTION

COA-25-32249 seeks to replace twenty-three (23) windows on a contributing structure within the Springfield Historic District. Built in 1910, the single-family structure is a two-story Frame Vernacular home characterized by its split-level asbestos shingle siding on the second-floor and rectangular Permastone on the first-floor, full-width front porch, 1-over-1 and lozenge-over-1 windows. As proposed, the applicant is seeking to replace twenty-three (23) wood 1-over-1 windows with a vinyl 1-over-1 window product. Their reasoning for installing a vinyl product is because it is cheaper compared to wood, wood-blend, or wood clad products.

The applicant proposes replacing twenty-three (23) windows on the structure with one-over-one vinyl windows. However, since this is a contributing structure, the replacement of wood windows with vinyl windows requires the review of the Jacksonville Historic Preservation Commission.

STAFF SUMMARY AND ANALYSIS

Staff considered the applicable Design Guidelines for the Springfield Historic District and the Ordinance Code criteria found in Sections 307.106(k) and 307.106(l). The following is Staff's analysis:

- Staff conducted its first site visit on April 22, 2025, and noted that the structure has a total of twenty-six (26) wood windows instead of the twenty-three (23) windows depicted on the applicant's submitted window survey. One (1) window is a wood lozenge-over-1 window, and the applicant wishes to retain this historic window. Another (1) window located on the rear second-floor elevation is a picture window made of a wood frame with plexiglass and its opening height is shorter than the height of two (2) surrounding windows. The applicant proposed to enclose this window, and they were previously approved under **COA-25-32234** to enclose this window along with other exterior alterations.
- The windows on the structure are majority wood 1-over-1 windows with some in great condition, some in fair condition, some in need of repair, and two (2) with termite damage or termite droppings. After a site visit conducted on August 7, 2025, it is the determination of Staff that while eleven (11) of the windows on the structure are not beyond reasonable repair, all of the windows except for three (3) are non-original to the structure.
- During the site visit conducted August 7, 2025, it was determined by Staff that while the existing windows on the structure are wood, the majority of the windows were replaced far after the structure was constructed in 1910. Based on the features of these windows, it appears majority of the windows were installed in the 1960s-1970s. Various windows on the structure have sashes that are ill-fitting, incompatible sizes, and beveled features—all of which differ from the windows deemed original to the structure.
- Out of the windows proposed for replacement, only three (3) are deemed to be original to the structure (window labeled 1, 17, and 18). The lozenge windows on the first-floor front elevation are also deemed original to the structure and are not proposed for replacement. The windows deemed original to the structure had a different design on the sashes and their sashes had a different thickness than the non-original windows.
- Twelve (12) windows are heavily decayed, have pieces with wood rot, have termite damage, or have water damage. These historic windows are inoperable and in disrepair. As such, the existing windows in their current state do not positively contribute to the character of the structure. Therefore, the conditioned work is consistent with Section 307.106(l)(2).
- After reviewing the Building Inspection Division's permitting systems and Staff records, there are no records indicating that the windows on the structure have been replaced. The 1985 *Florida Master Site File* for this property recorded the windows as double-hung sash, 1-over-1, wood, transom/sidelights, double-hung sash 1-over-1 wood Victorian lead glass upper pane. This leads Staff to believe that these windows are original or have gained historic significance, consistent with Section 307.106(l)(4)
- Consistent with Section 307.106(l)(6), replacement windows, as conditioned, will be of technologically advanced material and shall visually match the material being replaced.

- The Springfield Design Guidelines, Section on Windows, state that replacement windows "should match the original sash, pane size, configuration, glazing, muntin detail, and profile." The conditioned replacement windows match the original design according to documentation noted in the Florida Master Site File, which stated the windows on the structure were a majority of one-over-one windows.
- As conditioned, the replacement windows will match the existing windows in design (one-over-one) and visual qualities. The conditioned replacement windows will also mimic the features of the existing windows and will be constructed of either vinyl, wood, or a wood-blended material, consistent with the Design Guidelines for the Springfield Historic District.
- New windows will provide longevity to the remaining historic fabric of the structure. While the historic wood windows are being replaced, the relationship between this property and others in the area would be improved, as the conditioned scope of work would be replacing the existing deteriorated windows with new wood, wood-blend, or wood-clad windows that follow the same design and size of the existing historic windows, as conditioned. For these reasons, the alteration is consistent with Sections 307.106(k)(1 - 3).
- As stated by the contractor at the site visit conducted August 7, 2025, the new vinyl windows will be recessed 2 to 3 inches within the wall plane. As such, installation of the proposed replacement product is consistent with the Historic Preservation Window Supplement.

For these reasons, it is the position of the Planning and Development Department that the proposed work under the stated conditions is consistent with:

1. Section 307.106(k) General Standards: 1-3
2. Section 307.106(l) Guidelines on "Alterations": 2, 4 and 6
3. Historic District Design Guidelines, Section on "Windows, Awnings, and Shutters"
4. Historic Preservation Section Window Supplement

CODE CRITERIA AND DESIGN GUIDELINES

General Criteria

- 307.106(k)(1) - The effect of the proposed work on the landmark, landmark site or property within an historic district upon which such work is to be done;
- 307.106(k)(2) - The relationship between such work and other structures on the landmark site or other property in the historic district;
- 307.106(k)(3) - The extent to which the historic, architectural, or archaeological significance, architectural style, design, arrangement, texture and materials of the landmark or the property will be affected;

Alterations

- 307.106(l)(2) - The distinguishing original qualities or character of a building, structure, or site shall not be destroyed. The removal or alteration of any historic material or distinctive architectural features shall be avoided when possible.
- 307.106(l)(4) - Changes which may have taken place in the course of time are evidence of the history and development of a building, structure, or site. These changes may have acquired significance in their own right, and this significance shall be recognized and respected.
- 307.106(l)(6) - Deteriorated architectural features shall be repaired rather than replaced, wherever possible. In the event replacement is necessary, the new material shall match the material being replaced in composition, design, color, texture, and other visual qualities. However, technologically advanced materials shall be considered and used as replacement alternatives. Repair or replacement of missing architectural features shall be based on accurate duplications of features, substantiated by historical, physical, or pictorial evidence rather than on conjectural designs or the availability of different architectural elements from other buildings or structures.

Historic District Design Guidelines, "Windows, Awnings, and Shutters"

- Standard 6: Deteriorated historic features shall be repaired rather than replaced. Where the severity of deterioration requires the replacement of a distinctive feature, the new feature shall match the old in design, color, texture, and other visual qualities and, where possible, materials.
- Windows, Recommend #2: "Improve the thermal performance of existing windows and doors through adding or replacing weather-stripping and adding storm windows which are compatible with the character of the building, and which do not damage window frames."

- Windows, Recommend #3: "Replace missing or irreparable windows on significant elevations with new windows that match the original in material, size, general muntin, and mullion proportion and configuration, and reflective qualities of the glass."
- Windows, Avoid #6: "Replacing windows that contribute to the character of a building with those that are incompatible in size, configuration, and reflective qualities or which alter the setback relationship between window and wall."

LOCATION MAP

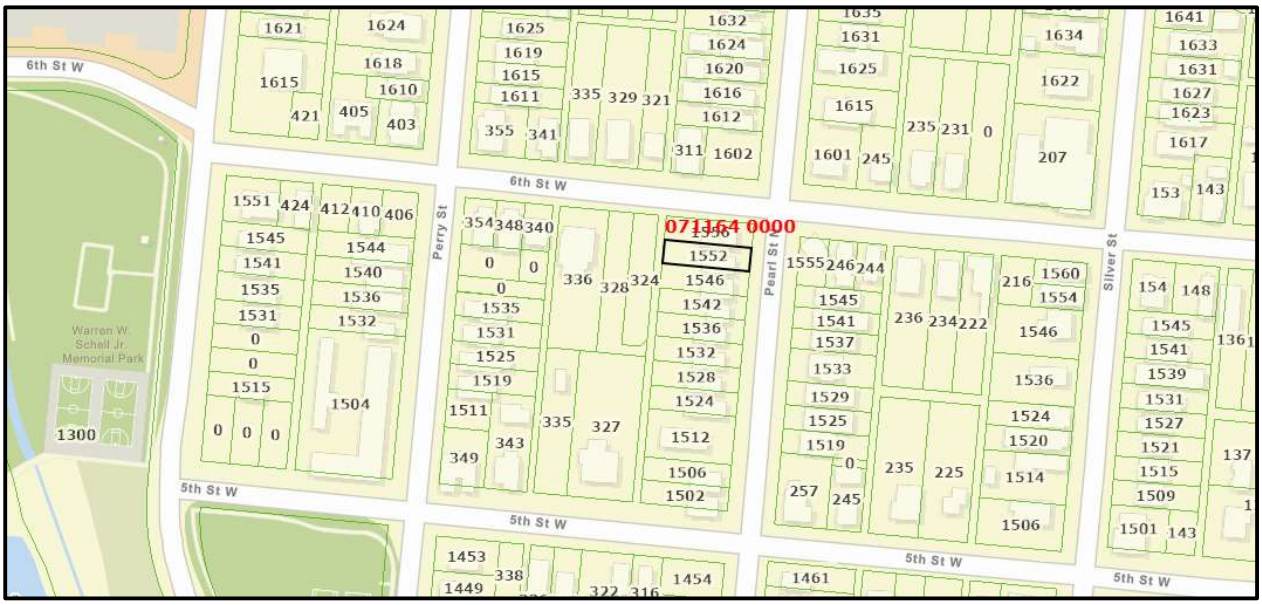

PICTURE OF SUBJECT PROPERTY WITH POSTED SIGN

1985 FLORIDA MASTER SITE FILE PICTURE

HISTORIC SPRINGFIELD SOCIETY'S PICTURE TAKEN IN 2001

NEW

EXHIBITS

09/24/25

WILTON SIMPSON
COMMISSIONER

Florida Department of Agriculture and Consumer Services
Division of Agricultural Environmental Services

WOOD-DESTROYING ORGANISMS INSPECTION REPORT

Rule 5E-14.142, F.A.C., Florida Administrative Code

SECTION 1 – GENERAL INFORMATION

Inspection Company:

Amarro Pest Termite WDO LLC
Inspection Company Name

Business License Number: JB321003

3384 Canyon Falls Dr
Company Address:

Phone Number: 9045018410

Green Cove Springs, Florida, 32043
Company City, State and Zip Code

Date of Inspection: 11/07/2024

Inspector's Name and Identification Card Number: Jonathan Marroletti (Print Name) JE310757 (ID Card No.)

Address of Property Inspected: 1552 N Pearl St, Jacksonville, FL 32206

Structure(s) on Property Inspected: Single Family Residence

Inspection and Report requested by: Lauren Prater c/o Southern Brothers Inspections
Name and Contact Information

Report Sent to Requestor and to: Southern Brothers Inspections
Name and Contact Information if different from above

SECTION 2 – INSPECTION FINDINGS – CONSUMERS SHOULD READ THIS SECTION CAREFULLY

THIS REPORT IS MADE ON THE BASIS OF WHAT WAS VISIBLE AND READILY ACCESSIBLE AT THE TIME OF INSPECTION AND DOES NOT CONSTITUTE A GUARANTEE OF THE ABSENCE OF WOOD-DESTROYING ORGANISMS (WDOs) OR DAMAGE OR OTHER EVIDENCE UNLESS THIS REPORT SPECIFICALLY STATES HEREIN THE EXTENT OF SUCH GUARANTEE.

This report does not cover areas such as, but not limited to, those that are enclosed or inaccessible, areas concealed by wall-coverings, floor coverings, furniture, equipment, stored articles, insulation or any portion of the structure in which inspection would necessitate removing or defacing any part of the structure.
This property was not inspected for any fungi other than wood-decaying fungi, and no opinion on health related effects or indoor air quality is provided or rendered by this report. Individuals licensed to perform pest control are not required, authorized or licensed to inspect or report for any fungi other than wood-destroying fungi, nor to report or comment on health or indoor air quality issues related to any fungi. Persons concerned about these issues should consult with a certified industrial hygienist or other person trained and qualified to render such opinions.***A wood-destroying organism (WDO) means an arthropod or plant life which damages and can reinfest seasoned wood in a structure, namely, termites, powder post beetles, old house borers, and wood-decaying fungi.***

NOTE: This is NOT a structural damage report. It should be understood that there may be damage, including possible hidden damage present. FURTHER INVESTIGATION BY QUALIFIED EXPERTS OF THE BUILDING TRADE SHOULD BE MADE TO DETERMINE THE STRUCTURAL SOUNDNESS OF THE PROPERTY.

Based on a visual inspection of accessible areas, the following findings were observed:
(See Page 2, Section 3 to determine which areas of the inspected structure(s) may have been inaccessible.)

A. ☐ **NO visible signs of WDO(s) (live, evidence or damage) observed.**

B. ☑ **VISIBLE** evidence of WDO(s) was observed as follows:

☐ **1. LIVE WDO(s):**
(Common Name of Organism and Location – use additional page, if needed)

☑ **2. EVIDENCE** of WDO(s) (dead wood-destroying insects or insect parts, frass, shelter tubes, exit holes, or other evidence):
Wood decay fungi observed at multiple windows throughout the home at the exterior, at front porch base of bottoms guardrail at transition, at front porch decking, at adjacent trim at front post entrance, at soffits and fascia throughout the perimeter or the home in multiple areas, at front porch ceiling, at floor sheathing and floor joists under kitchen in crawlspace. Drywood termite damage observed at multiple interior windows throughout home, at multiple ceiling joists in attic space.
(Common Name, Description and Location – Describe evidence – use additional page, if needed)

☑ **3. DAMAGE** caused by WDO(s) was observed and noted as follows
Damage from Wood decay fungi observed at multiple windows throughout the home at the exterior, at front porch base of bottoms guardrail at transition, at front porch decking, at adjacent trim at front post entrance, at soffits and fascia throughout the perimeter or the home in multiple areas, at front porch ceiling, at floor sheathing and floor joists under kitchen in crawlspace. Drywood termite damage observed at multiple interior windows throughout home, at multiple ceiling joists in attic space.
(Common Name, Description and Location of all visible damage – Describe damage – use additional page, if needed)

CONTINUED ON PAGE TWO

SECTION 3 – OBSTRUCTIONS AND INACCESSIBLE AREAS: The following areas of the structure(s) inspected were obstructed or inaccessible. NO INFORMATION on the status of wood-destroying organisms or damage from wood-destroying organisms in these areas is provided in this report.

In addition to those areas described in consumer information on Page 1, Section 2; the following specific areas were not visible and/or accessible for inspection. The descriptions and reasons for inaccessibility are stated below:

☑ Attic **SPECIFIC AREAS:** Behind insulation, ducting, edges and corners of attic

REASON: These items can create a physical barrier and hide evidence of WDO, architectural design prevents full access to edges and corners of attic

☑ Interior **SPECIFIC AREAS:** Behind furnishings, appliances, behind floor and drywall, paint, etc

REASON: These items can create a physical barrier and hide evidence of WDO

☑ Exterior **SPECIFIC AREAS:** Behind siding, landscaping, paint, decks, etc

REASON: These items can create a physical barrier and hide evidence of WDO

☑ Crawlspace **SPECIFIC AREAS:** Limited access to unsafe locations - Behind plumbing, insulation, ducting, framing edges,

REASON: These items can create a physical barrier and hide evidence of WDO

☐ Other: **SPECIFIC AREAS:**

REASON:

SECTION 4 – NOTICE OF INSPECTION AND TREATMENT INFORMATION

EVIDENCE of previous treatment observed: ☐ Yes ☑ No If Yes, the structure exhibits evidence of previous treatment. List what was observed:

(State what visible evidence was observed to suggest possible previous treatment – use additional page, if needed)

NOTE: The inspecting company can give no assurances with regard to work done by other companies. The company that performed the treatment should be contacted for information on treatment history and any warranty or service agreement which may be in place.

A Notice of Inspection has been affixed to the structure at: Electrical panel

(State the location)

This Company has treated the structure(s) at the time of inspection ☐ Yes ☑ No

If Yes: Common name of organism treated:

(Common name of organism)

Name of Pesticide Used: Terms and Condition of Treatment:

Method of treatment: ☐ Whole structure ☐ Spot Treatment:

Specify Treatment Notice Location:

SECTION 5 – COMMENTS AND FINANCIAL DISCLOSURE

Comments: Please read comments in their entirety! We encourage you to call our office with any questions or concerns before an inspection period or contract limitation lapses. (904) 501-8410 It is advised and imperative that repairs to noted damages be addressed by licensed contractors of appropriate trades. Photographs and images of the subject property are included for general notes of damage locations. The included photographs are intended for location reference only and do not specifically represent all locations of damages noted in your report. This is a limited visual inspection – please be aware that wood destroying organisms can be covered or obstructed from view via construction materials/methods, paint, wallpaper, finishes, personal items, furnishings, and other obstructions. Wood destroying organisms may not be detected for a period before VISIBLE damage is achieved. There is a possibility that hidden WDO activity is present and may exist with in limited conditions noted in this report and elsewhere. It is for this reason we highly advise assuming current treatment bonds, if available, or establishing an Annual Termite Treatment Agreement if one does not exist on the subject property. We are only reporting on wood destroying organisms as labeled and prescribed by state laws/statutes. We are not structural engineers and cannot therefore confirm if damages are structural in nature. Neither the company (licensee) nor the inspector has any financial interest in the property inspected or is associated in any way in the transaction or with any party to the transaction other than for inspection purposes.

(Use additional pages if necessary)

Neither the company (licensee) nor the inspector has any financial interest in the property inspected or is associated in any way in the transaction or with any party to the transaction other than for inspection purposes.

Signature of Licensee or Agent: 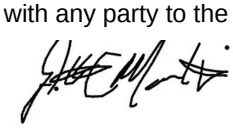

Date: 11/07/2024

Address of Property Inspected: 1552 N Pearl St, Jacksonville, FL 32206

Inspection Date: 11/07/2024

Bureau of Inspection and Incident Response, (850) 617-7996

PHOTOS

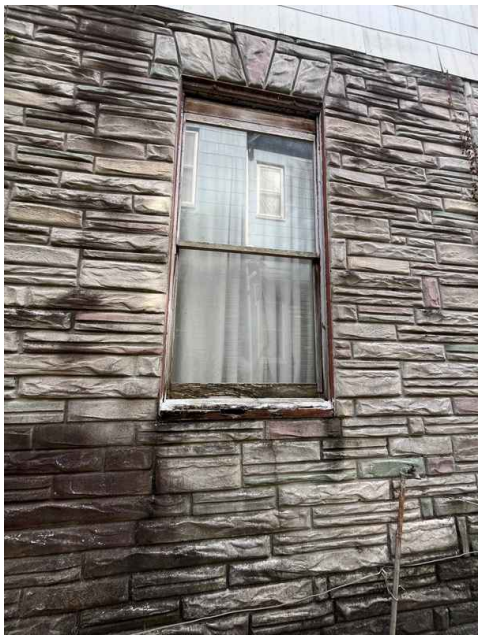

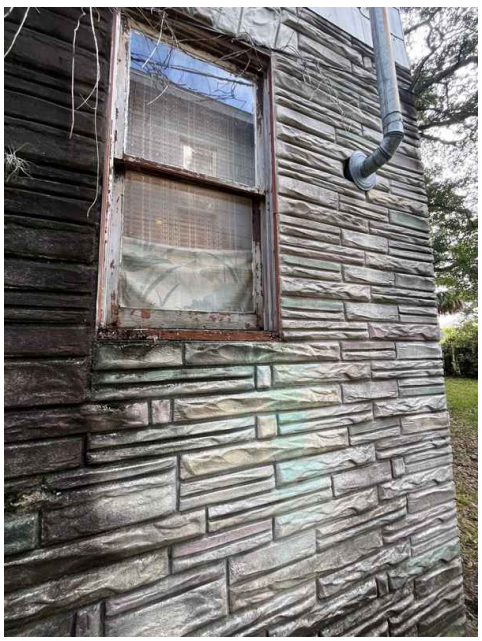

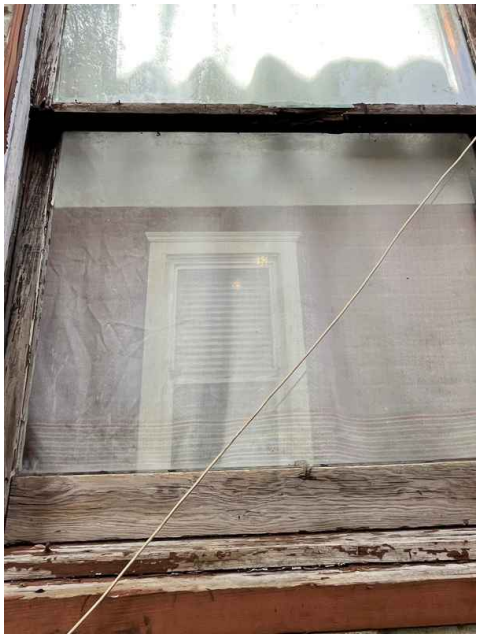

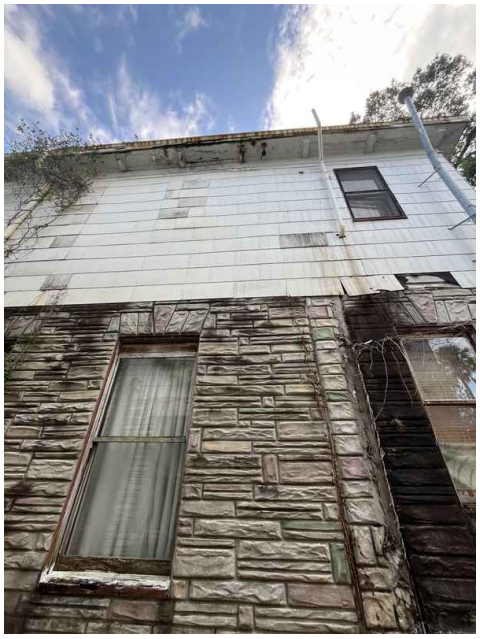

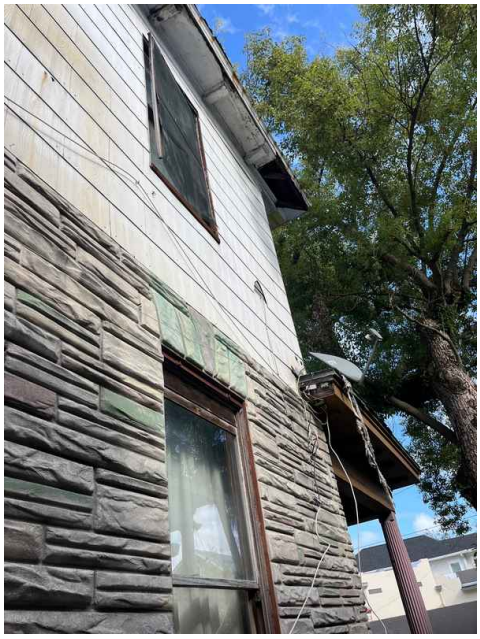
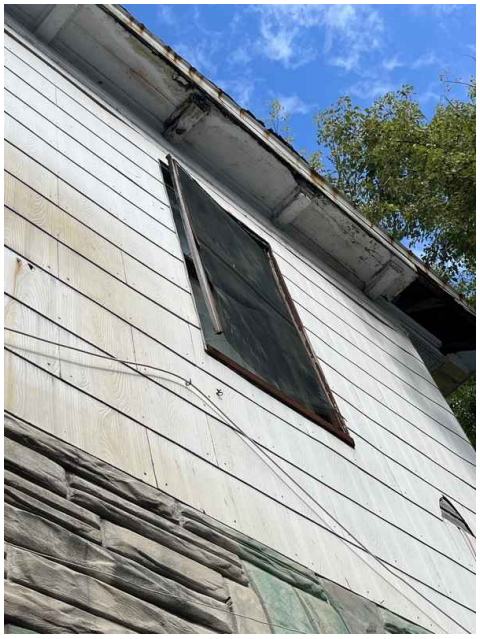

WINCORE™
WINDOWS & DOORS

250 Staunton Turnpike, Parkersburg, WV 26104

7700 / 9900 Series Vinyl Double Hung Window

"NON-IMPACT"

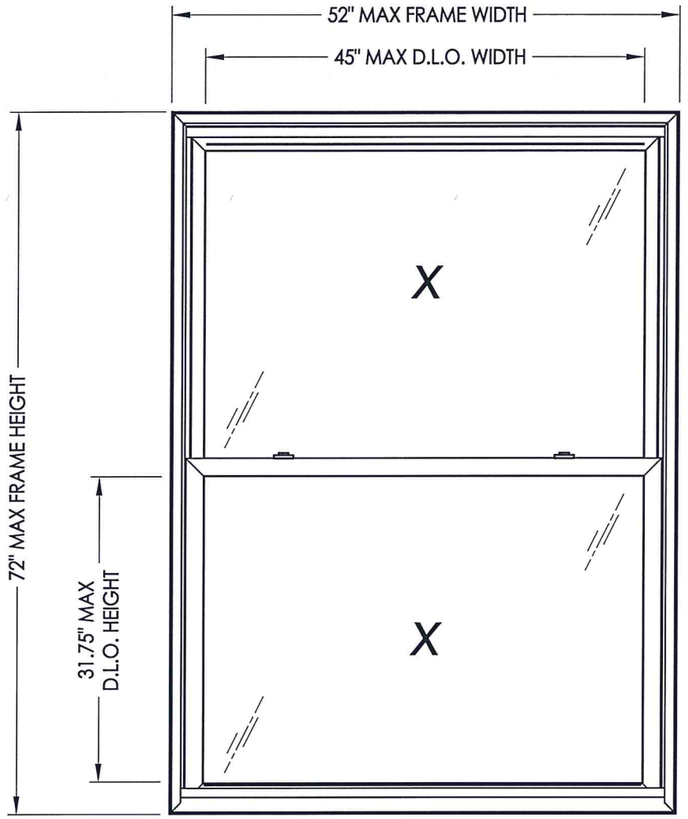

GENERAL NOTES

1. This product has been evaluated and is in compliance with the 7th Edition (2020) Florida Building Code (FBC) structural requirements excluding the "High Velocity Hurricane Zone" (HVHZ).

2. Product anchors shall be as listed and spaced as shown on details. Anchor embedment to base material shall be beyond wall dressing or stucco.

3. When used in areas requiring wind borne debris protection this product is required to be protected with an impact resistant covering that complies with FBC Sections 1609.1.2 & R301.2.1.2.

4. For 2x stud framing construction, anchoring of these units shall be the same as that shown for 2x buck masonry construction.

5. Site conditions that deviate from the details of this drawing require further engineering analysis by a licensed engineer or registered architect.

TABLE OF CONTENTS

SHEET#	DESCRIPTION
1	Typical elevations, design pressures and general notes
2	Horizontal cross sections
3	Vertical cross sections
4	Buck and frame anchoring
5	Bill of materials, components & glazing details

MAX. FRAME DIMENSION	MAX. D.L.O. DIMENSION	GLASS TYPE	DESIGN PRESSURE (PSF)	
			POSITIVE	NEGATIVE
32.0" X 58.0"	25.0" X 24.75"	G1, G2	+55.0	-55.0
52.0" X 40.0"	45.0" X 15.75"	G1, G2	+45.0	-45.0
48.0" X 42.0"	41.0" X 16.75"	G1, G2	+45.0	-45.0
44.0" X 46.0"	37.0" X 18.75"	G1, G2	+45.0	-45.0
40.0" X 52.0"	33.0" X 21.75"	G1, G2	+45.0	-45.0
36.0" X 56.0"	29.0" X 23.75"	G1, G2	+45.0	-45.0
32.0" X 64.0"	25.0" X 27.75"	G1, G2	+45.0	-45.0
52.0" X 44.0"	45.0" X 17.75"	G1, G2	+40.0	-40.0
48.0" X 48.0"	41.0" X 19.75"	G1, G2	+40.0	-40.0
44.0" X 52.0"	37.0" X 21.75"	G1, G2	+40.0	-40.0
40.0" X 58.0"	33.0" X 24.75"	G1, G2	+40.0	-40.0

MAX. FRAME DIMENSION	MAX. D.L.O. DIMENSION	GLASS TYPE	DESIGN PRESSURE (PSF)	
			POSITIVE	NEGATIVE
36.0" X 64.0"	29.0" X 27.75"	G1, G2	+40.0	-40.0
32.0" X 70.0"	25.0" X 30.75"	G1, G2	+40.0	-40.0
52.0" X 50.0"	45.0" X 20.75"	G1, G2	+35.0	-35.0
48.0" X 54.0"	41.0" X 22.75"	G1, G2	+35.0	-35.0
44.0" X 60.0"	37.0" X 25.75"	G1, G2	+35.0	-35.0
40.0" X 66.0"	33.0" X 28.75"	G1, G2	+35.0	-35.0
36.0" X 72.0"	29.0" X 31.75"	G1, G2	+35.0	-35.0
52.0" X 60.0"	45.0" X 25.75"	G1, G2	+30.0	-30.0
48.0" X 64.0"	41.0" X 27.75"	G1, G2	+30.0	-30.0
44.0" X 70.0"	37.0" X 30.75"	G1, G2	+30.0	-30.0
40.0" X 72.0"	33.0" X 31.75"	G1, G2	+30.0	-30.0
52.0" X 72.0"	45.0" X 31.75"	G1, G2	+25.0	-25.0

L.F. SCHMIDT LICENSE No. 43409 STATE OF FLORIDA PROFESSIONAL ENGINEER
July 2, 2020

Documents Prepared By:
Lyndon F. Schmidt
P.E. No. 43409

R.W. BUILDING CONSULTANTS, INC.
P.O. Box 230, Valrico, FL 33595
Phone No.: 813.659.9197
FBPE Registry No. 9813

PRODUCT: 7700 / 9900 SERIES Vinyl Double Hung Window

PART OR ASSEMBLY: TYPICAL ELEVATION, DESIGN PRESSURES & GENERAL NOTES

NO.	DATE	REVISIONS	
5	7/02/20	UPDATE TO 7TH ED. (2020) FBC	LFS
4	6/01/17	UPDATE TO 6TH ED. (2017) FBC	LFS
3	5/10/16	REVISE INSTALLATION SCREWS	LFS
2	1/27/15	UPDATE TO 5TH ED. (2014) FBC	LFS
1	8/25/14	REVISE SERIES NO.	JK
			BY

DATE: 6/23/14
SCALE: N.T.S.
DWG. BY: JK
CHK. BY: LFS
DRAWING NO.: FL-15819.8
SHEET 1 OF 5

© 2014 R.W. BUILDING CONSULTANTS INC.

R:\Clients\Wincore PERMANENT\A - Florida Product Approvals\FL-15819 Double Hung\C - Drawings\2020 FBC\FL-15819.8.dwg, FL-15816.8

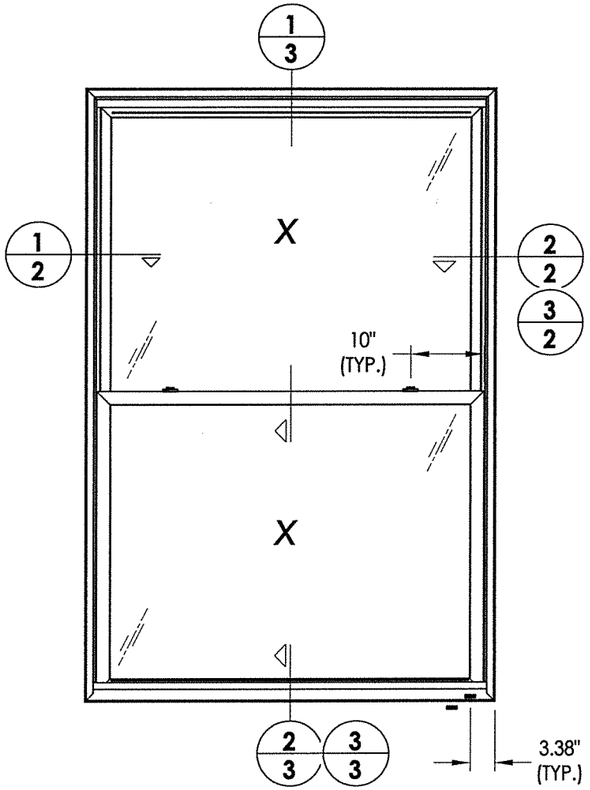

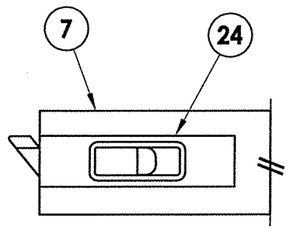

DETAIL 1

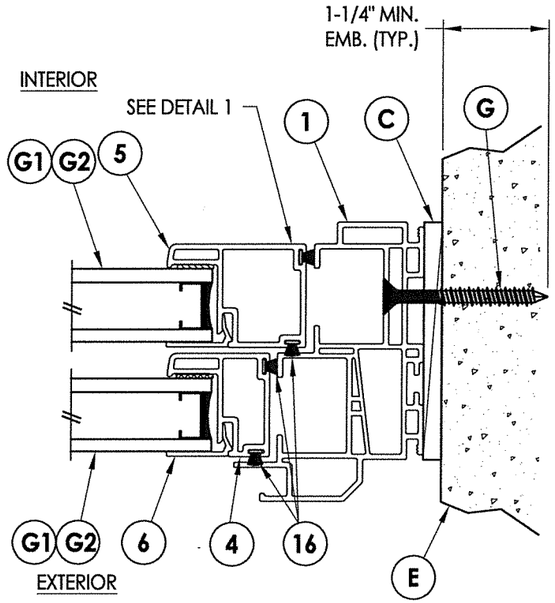

2/2 HORIZONTAL CROSS SECTION
Shown direct to masonry

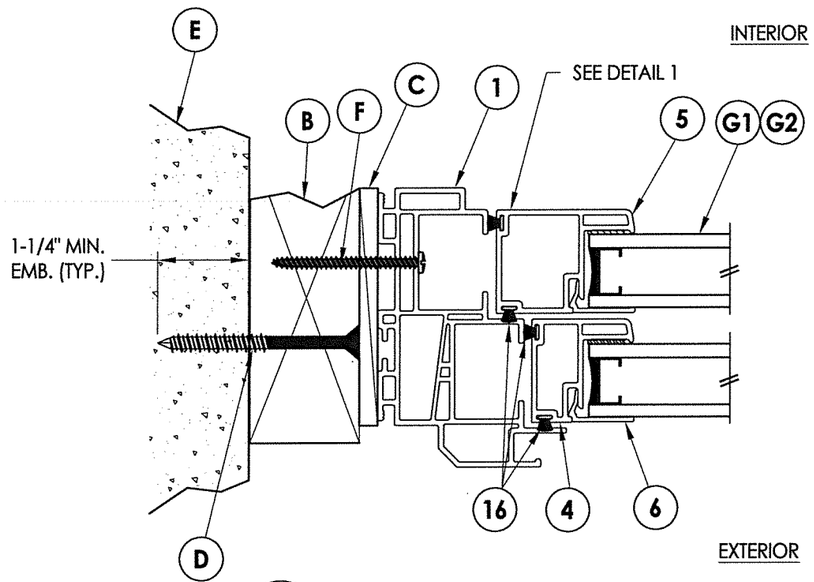

1/2 HORIZONTAL CROSS SECTION
Shown w/ 2X buck

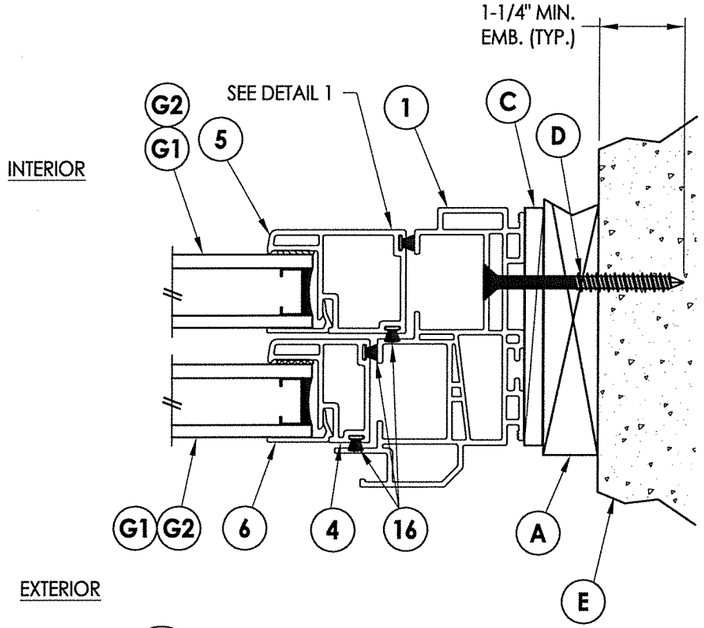

3/2 HORIZONTAL CROSS SECTION
Shown w/ 1X buck

T. F. SCHMIDT LICENSE No. 43409 STATE OF FLORIDA PROFESSIONAL ENGINEER

July 2, 2020

Documents Prepared By:
Lyndon F. Schmidt
P.E. No. 43409

R.W. BUILDING CONSULTANTS, INC.
P.O. Box 230, Valrico, FL 33595
Phone No.: 813.659.9197
FBPE Registry No. 9813

PRODUCT: 7700 / 9900 SERIES Vinyl Double Hung Window

PART OR ASSEMBLY: HORIZONTAL CROSS SECTIONS

NO.	DATE	REVISIONS	BY
5	7/02/20	UPDATE TO 7TH ED. (2020) FBC	LFS
4	6/01/17	UPDATE TO 6TH ED. (2017) FBC	LFS
3	5/10/16	REVISE INSTALLATION SCREWS	LFS
2	1/27/15	UPDATE TO 5TH ED. (2014) FBC	LFS
1	8/25/14	REVISE SERIES NO.	JK

DATE: 6/23/14
SCALE: N.T.S.
DWG. BY: JK
CHK. BY: LFS
DRAWING NO.: FL-15819.8
SHEET 2 OF 5

© 2014 R.W. BUILDING CONSULTANTS INC.

R:\Clients\Wincore PERMANENT\A - Florida Product Approvals\FL-15819 Double Hung\C - Drawings\2020 FBC\FL-15819.8.dwg, 2.5

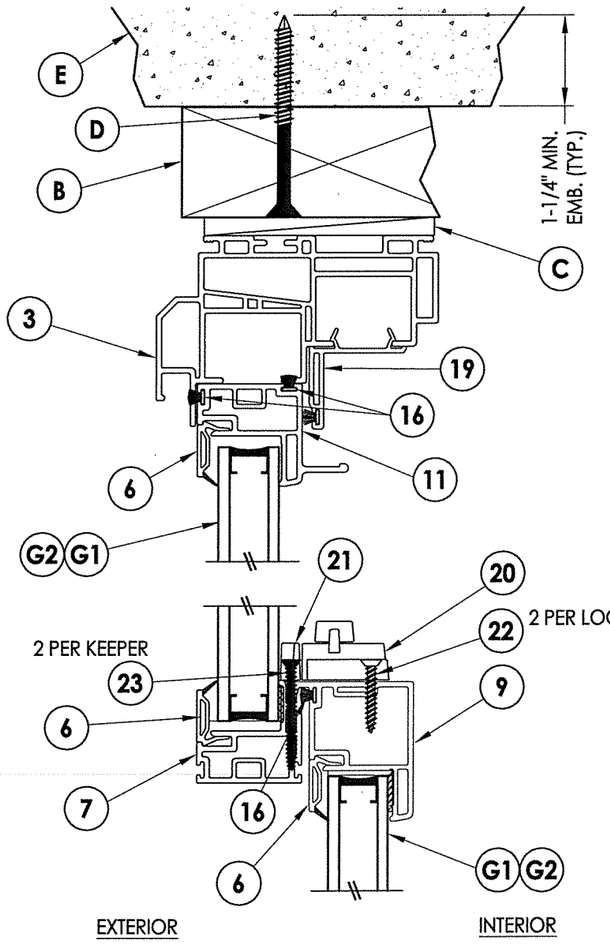

1/3 VERTICAL CROSS SECTION
Shown w/ 2X buck

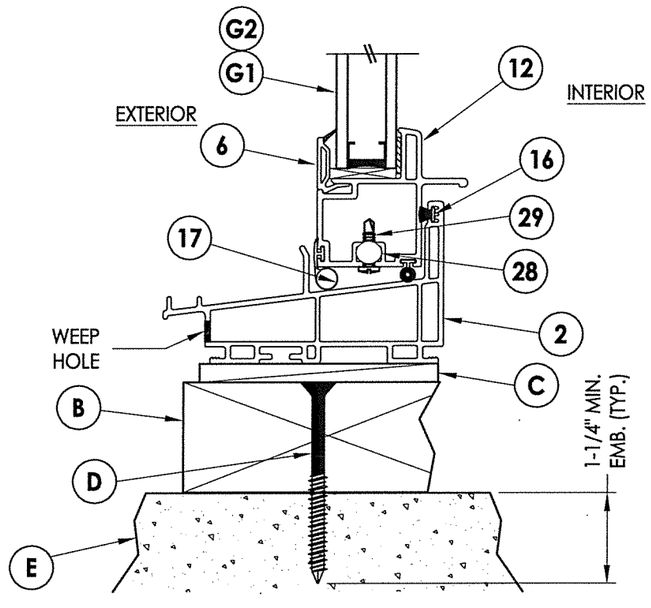

2/3 VERTICAL CROSS SECTION
Shown w/ 2X buck

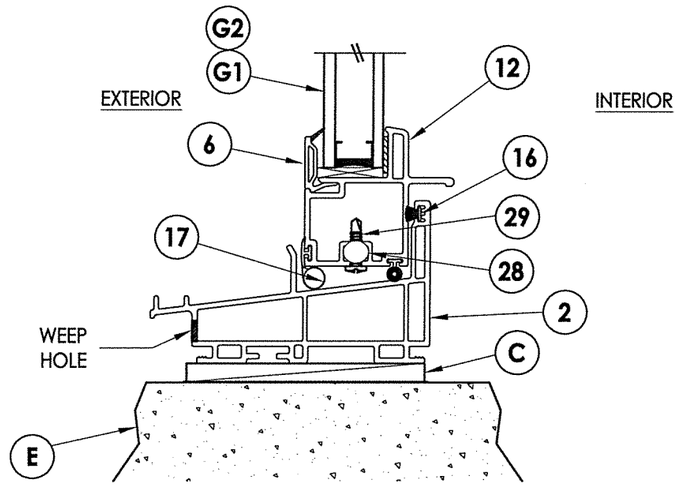

3/3 VERTICAL CROSS SECTION
Shown direct to masonry

L. F. SCHMIDT LICENSE No. 43409 STATE OF FLORIDA PROFESSIONAL ENGINEER

July 2, 2020

Documents Prepared By:
Lyndon F. Schmidt
P.E. No. 43409

R|W BUILDING CONSULTANTS, INC.
P.O. Box 230, Valrico, FL 33595
Phone No.: 813.659.9197
FBPE Registry No. 9813

PRODUCT:
7700 / 9900 SERIES
Vinyl Double Hung Window

PART OR ASSEMBLY:
VERTICAL
CROSS SECTIONS

NO.	DATE	REVISIONS	BY
5	7/02/20	UPDATE TO 7TH ED. (2020) FBC	LFS
4	6/01/17	UPDATE TO 6TH ED. (2017) FBC	LFS
3	5/10/16	REVISE INSTALLATION SCREWS	LFS
2	1/27/15	UPDATE TO 5TH ED. (2014) FBC	LFS
1	8/25/14	REVISE SERIES NO.	JK

DATE: 6/23/14
SCALE: N.T.S.
DWG. BY: JK
CHK. BY: LFS
DRAWING NO.:
FL-15819.8
SHEET 3 OF 5

© 2014 R.W. BUILDING CONSULTANTS INC.

R:\Clients\Wincore PERMANENT\A - Florida Product Approvals\FL-15819 Double Hung\C - Drawings\2020 FBC\FL-15819.8.dwg, 3.5

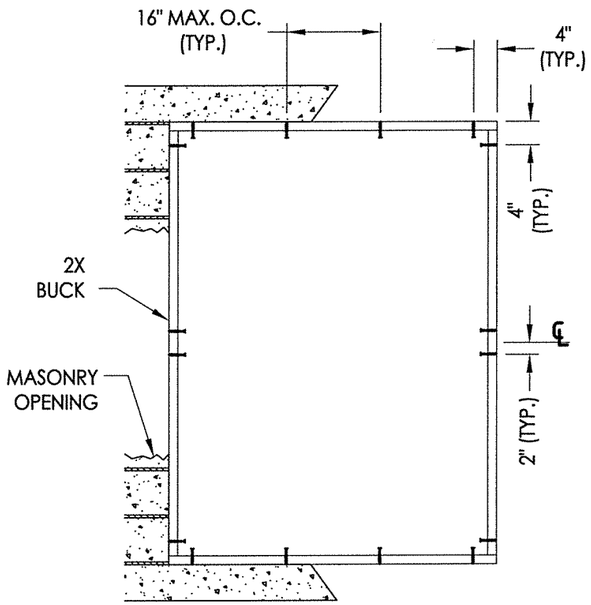

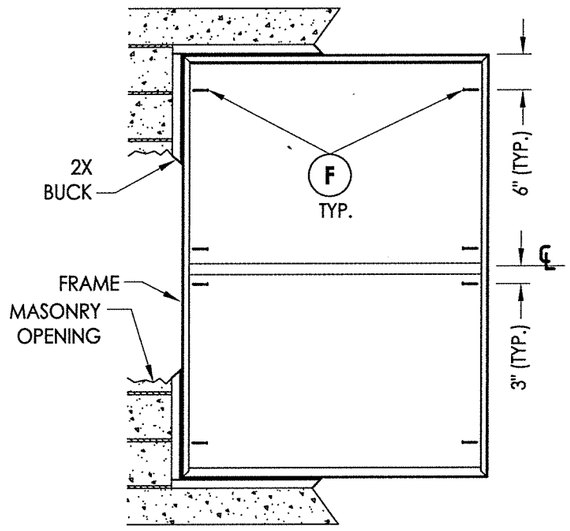

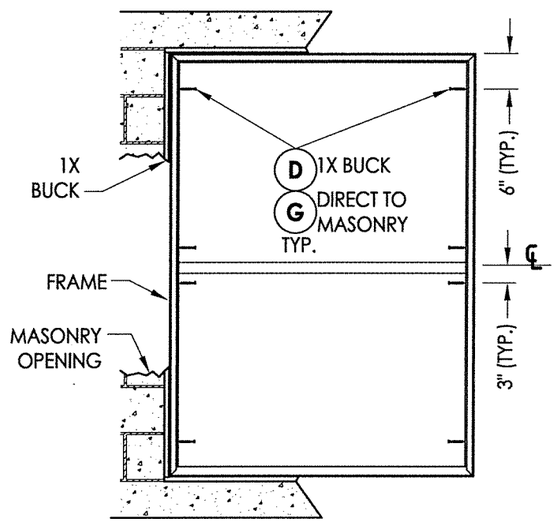

BUCK ANCHORING

FRAME ANCHORING
2X Buck

FRAME ANCHORING
1X Buck
Direct to masonry

CONCRETE ANCHOR NOTES:

1. *Concrete anchor locations at the corners may be adjusted to maintain the min. edge distance to mortar joints.*
2. *Concrete anchor locations noted as "MAX. ON CENTER" must be adjusted to maintain the min. edge distance to mortar joints, additional concrete anchors may be required to ensure the "MAX. ON CENTER" dimensions are not exceeded.*
3. *Concrete anchor table:*

ANCHOR TYPE	ANCHOR SIZE	MIN. EMBEDMENT	MIN. CLEARANCE TO MASONRY EDGE	MIN. CLEARANCE TO ADJACENT ANCHOR
ITW TAPCON®	1/4"	1-1/4"	2"	4"
ELCO ULTRACON®	1/4"	1-1/4"	1"	4"

WOOD SCREW INSTALLATION NOTES:

1. *Maintain a minimum 5/8" edge distance, 1" end distance, & 1" o.c. spacing of wood screws to prevent the splitting of wood.*

L. F. SCHMIDT LICENSE No. 43409 STATE OF FLORIDA PROFESSIONAL ENGINEER

July 2, 2020

Documents Prepared By:
Lyndon F. Schmidt
P.E. No. 43409

R|W BUILDING CONSULTANTS, INC.
P.O. Box 230, Valrico, FL 33595
Phone No.: 813.659.9197
FBPE Registry No. 9813

PRODUCT: 7700 / 9900 SERIES Vinyl Double Hung Window

PART OR ASSEMBLY: BUCK AND FRAME ANCHORING

NO.	DATE	REVISIONS	BY
5	7/02/20	UPDATE TO 7TH ED. (2020) FBC	LFS
4	6/01/17	UPDATE TO 6TH ED. (2017) FBC	LFS
3	5/10/16	REVISE INSTALLATION SCREWS	LFS
2	1/27/15	UPDATE TO 5TH ED. (2014) FBC	LFS
1	8/25/14	REVISE SERIES NO.	JK

DATE: 6/23/14
SCALE: N.T.S.
DWG. BY: JK
CHK. BY: LFS
DRAWING NO.: FL-15819.8
SHEET 4 OF 5

© 2014 R.W. BUILDING CONSULTANTS INC.

R:\Clients\Wincore PERMANENT\A - Florida Product Approvals\FL-15819 Double Hung\C - Drawings\2020 FBC\FL-15819.8.dwg, 4.5

BILL OF MATERIALS

ITEM #	DESCRIPTION	MATERIAL
A	1X BUCK SG >= 0.42	WOOD
B	2X BUCK SG >= 0.42	WOOD
C	1/4" MAX. SHIM SPACE	-
D	1/4" X 2-3/4" PFH ELCO OR ITW CONCRETE SCREW	STEEL
E	MASONRY - 3,000 PSI MIN. CONCRETE CONFORMING TO ACI 301 OR HOLLOW BLOCK CONFORMING TO ASTM C90	CONCRETE
F	#8 X 2" PAN HEAD/TRUSS HEAD WOOD SCREW (1-3/8" MIN. EMBEDMENT)	STEEL
G	1/4" X 2-1/4" PFH ELCO OR ITW CONCRETE SCREW	STEEL
1	FRAME JAMB* (DH 7701)	PVC
2	SILL* (DH 7703)	PVC
3	FRAME HEAD* (DH 7701)	PVC
4	UPPER SASH STILE* (SE 3035)	PVC
5	LOWER SASH STILE* (SE 3045)	PVC
6	GLAZING BEAD*	PVC
7	KEEPER RAIL UPPER SASH* (SE 3034)	PVC
9	LOCK RAIL LOWER SASH* (SE 3046)	PVC
11	TOP RAIL UPPER SASH* (SE 3037)	PVC
12	BOTTOM RAIL LOWER SASH* (SE 3047)	PVC
16	WEATHERSTRIP ULTRA FAB .270 PILE - 270 -1875B	-
17	WEATHERSTRIP SILLBULB (AMESBURY 32690)	-
19	HEAD ADAPTER* (DH 3005)	PVC
20	LOCK 8513 / 8845 LAWRENCE	PVC
21	KEEPER 2700 - 214 LAWRENCE	PVC
22	#8 X 1" PFH (VINYL LOCK SCREWS)	STEEL
23	#6 X 1-1/2" PFH (VINYL LOCK SCREWS)	STEEL
24	TOP SASH TILT LATCH - ASHLAND	PVC
28	PIVOT BAR - CALDWELL	-
29	#8 X 1/2" SELF TAPPING PPH SMS	STEEL

* THE APPROVED WHITE RIGID PVC EXTERIOR EXTRUSIONS FOR WINDOWS ARE TO BE PRODUCED BY EXTRUDERS LICENSEES IN "AAMA CERTIFICATION PROGRAMS FOR RIGID PVC EXTRUSIONS".

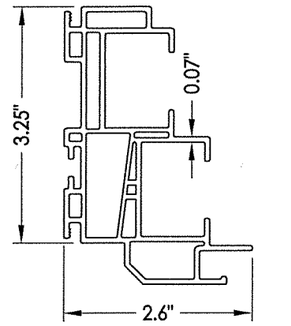

3 1 **FRAME HEAD & JAMB**

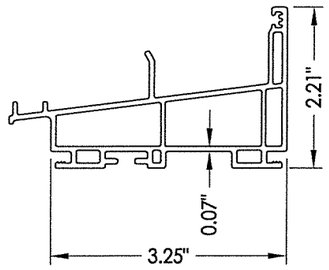

2 **SILL**

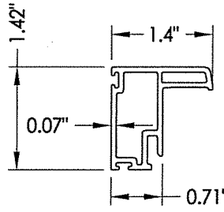

4 **SASH STILE** Top

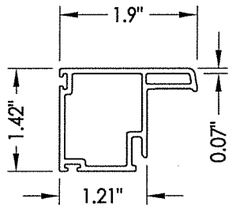

5 **SASH STILE** Bottom

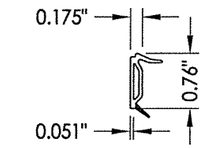

6 **GLAZING BEAD**

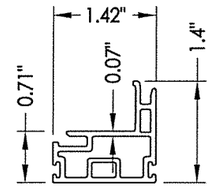

7 **KEEPER RAIL** Upper Sash

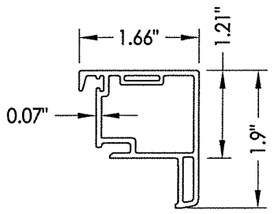

9 **LOCK RAIL** Lower Sash

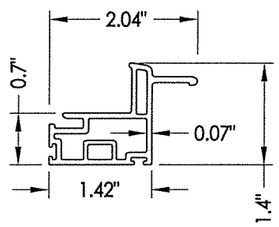

11 **TOP RAIL** Upper Sash

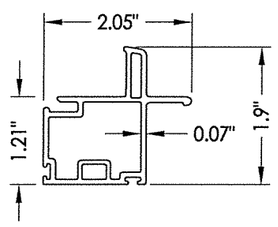

12 **BOTTOM RAIL** Lower Sash

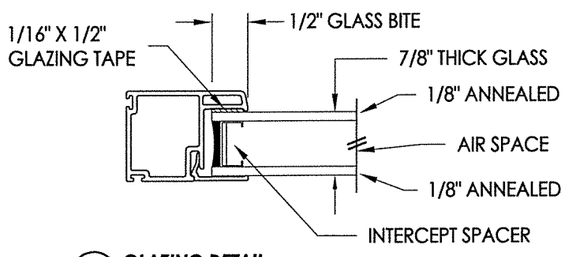

G1 **GLAZING DETAIL**
(See General Note 3, Sheet 1)

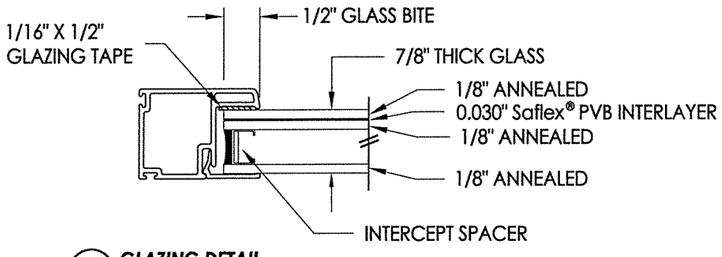

G2 **GLAZING DETAIL**
(See General Note 3, Sheet 1)

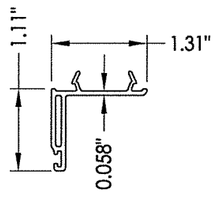

19 **HEAD ADAPTER**

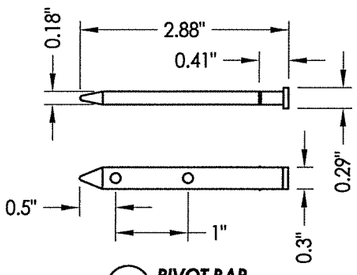

28 **PIVOT BAR**

STATE OF FLORIDA PROFESSIONAL ENGINEER
LYNDON F. SCHMIDT LICENSE No. 43409
July 2, 2020
Documents Prepared By:
Lyndon F. Schmidt
P.E. No. 43409
BUILDING CONSULTANTS, INC.
P.O. Box 230, Valrico, FL 33595
Phone No.: 813.659.9197
FBPE Registry No. 9813

PRODUCT: 7700 / 9900 SERIES Vinyl Double Hung Window

PART OR ASSEMBLY: BILL OF MATERIALS COMPONENTS & GLAZING DETAIL

NO.	DATE	BY	REVISIONS
5	7/02/20	LFS	UPDATE TO 7TH ED. (2020) FBC
4	6/01/17	LFS	UPDATE TO 6TH ED. (2017) FBC
3	5/10/16	LFS	REVISE INSTALLATION SCREWS
2	1/27/15	LFS	UPDATE TO 5TH ED. (2014) FBC
1	8/25/14	JK	REVISE SERIES NO.

DATE: 6/23/14
SCALE: N.T.S.
DWG. BY: JK
CHK. BY: LFS
DRAWING NO.: FL-15819.8
SHEET 5 OF 5

© 2014 R.W. BUILDING CONSULTANTS INC.

R:\Clients\Wincore PERMANENT\A - Florida Product Approvals\FL-15819 Double Hung\C - Drawings\2020 FBC\FL-15819.8.dwg, 5.5

Wells, Arimus - PDCM

From: Lauren Prater <lilaloconsulting@gmail.com>
Sent: Tuesday, September 16, 2025 2:31 PM
To: Julia Epstein
Cc: Wells, Arimus - PDCM
Subject: Re: COA-25-32249 at 1552 Pearl St N

EXTERNAL EMAIL: This email originated from a non-COJ email address. Do not click any links or open any attachments unless you trust the sender and know the content is safe.

I will forward your email to him and request clarification or an alternative. I believe he selected this product because it was previously accepted by the commissioners on a different project. I am very appreciative of your assistance and want to comply to get approval!

On Tue, Sep 16, 2025 at 2:00 PM Julia Epstein <jepstein@dasherhurst.com> wrote:

> Hi Lauren,
>
> I found this on another window manufactures website, you can see here that the bottom rail of this window which has a more historically accurate profile is about twice the size of the side and top rails. While the Historic commission and staff cannot dictact the size of these rails, we like to see a pronounced larger bottom rail on a double hung window.

MARVIN

Ultimate Double Hung

Section Details: Operating

Scale: 3" = 1' 0"

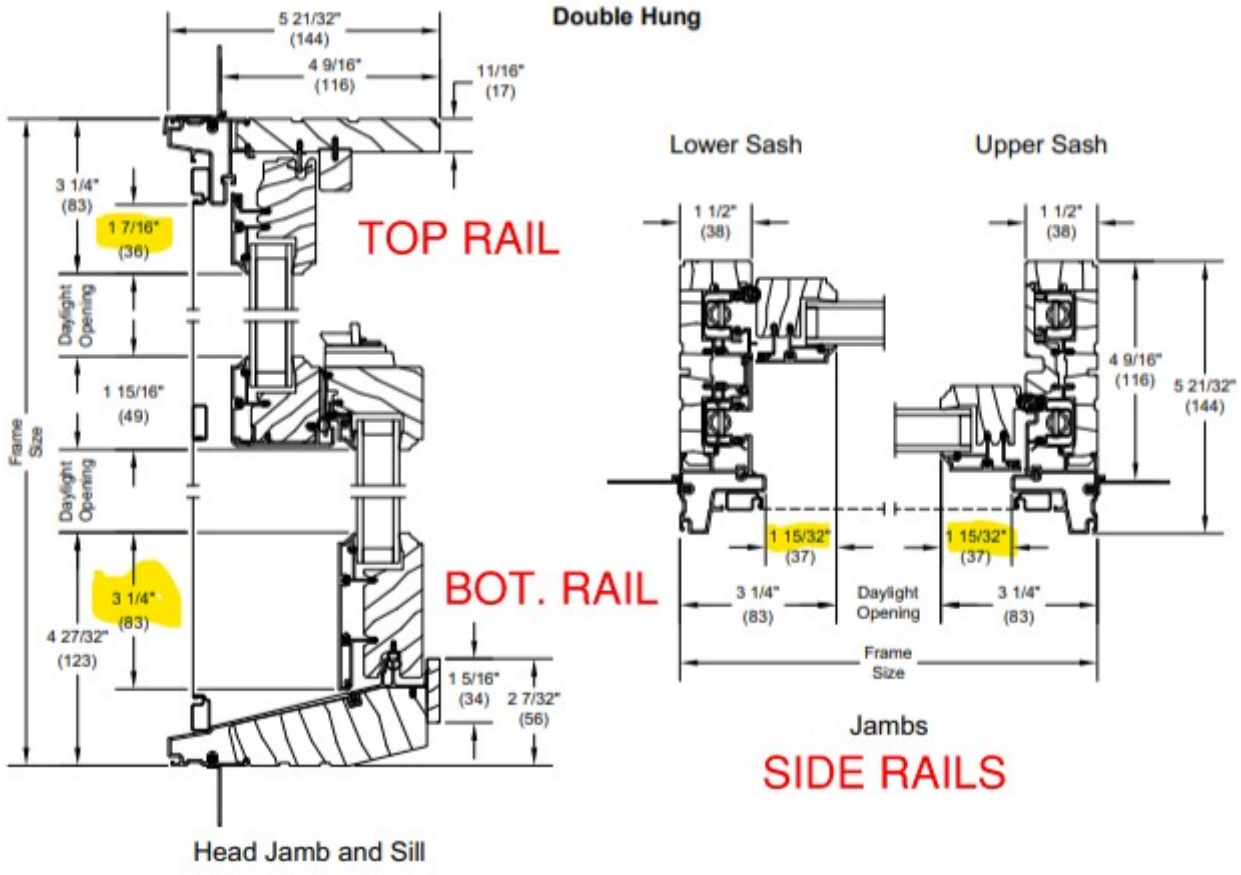

Thank you,

Julia Epstein, AIA, LEED AP BD+C

Architect I 904.425.5280

From: Lauren Prater <lilaloconsulting@gmail.com>

Sent: Tuesday, September 16, 2025 11:06 AM
To: Julia Epstein <jepstein@dasherhurst.com>
Cc: Wells, Arimus - PDCM <ArimusW@coj.net>
Subject: Re: COA-25-32249 at 1552 Pearl St N

Hi Julia and Arimus, can I help schedule a call with my window guy to ensure I give you what you need? If you have any questions regarding the specs, he will be able to help! I am not sure how to reconcile the information I have provided with the window supplement, or if this is outside of the supplement and I want to make sure we can answer the commissioner's questions.

On Mon, Sep 15, 2025 at 10:42 AM Julia Epstein <jepstein@dasherhurst.com> wrote:

> Hi Lauren,
>
> I'll see If I Have time to look at this today. The drawings you sent are a little confusing showing the parts and dimensions so I want to be sure I am understanding them correctly.
>
> Thank you,
>
> **Julia Epstein**, AIA, LEED AP BD+C
>
> Architect I 904.425.5280
>
> ---
>
> **From:** Wells, Arimus - PDCM <ArimusW@coj.net>
> **Sent:** Friday, September 12, 2025 3:22 PM
> **To:** Lauren Prater <lilaloconsulting@gmail.com>; Julia Epstein <jepstein@dasherhurst.com>
> **Subject:** RE: COA-25-32249 at 1552 Pearl St N
>
> Hi Lauren,
>
> Thank you for providing these. As for the WDO report, that will suffice.
>
> Best Regards,
>
> Arimus
>
> --

Arimus T. Wells, MPA

City Planner Supervisor

Historic Preservation Section

Planning Department

214 North Hogan Street, Suite 300

Jacksonville, FL 32202

Office: 904-255-7824

From: Lauren Prater <lilaloconsulting@gmail.com>
Sent: Wednesday, September 10, 2025 2:07 PM
To: Julia Epstein <jepstein@dasherhurst.com>; Wells, Arimus - PDCM <ArimusW@coj.net>
Subject: Re: COA-25-32249 at 1552 Pearl St N

EXTERNAL EMAIL: This email originated from a non-COJ email address. Do not click any links or open any attachments unless you trust the sender and know the content is safe.

Hi all, I wanted to follow up to confirm I have provided sufficient information.

On Fri, Sep 5, 2025 at 4:07 PM Lauren Prater <lilaloconsulting@gmail.com> wrote:

> Hi Julia and Arimus, thank you again for your instruction. Please see attached for the window specifications as well as the wdo. Please let me know if what I have provided meets the board's needs.
>
> Thank you and I look forward to hearing from you.

On Thu, Sep 4, 2025 at 4:02 PM Julia Epstein <jepstein@dasherhurst.com> wrote:

Hi Lauren,

Thank you for giving me a few days to put together something for you. I have attached a vinyl window design manual / Spec for Pella Windows to this email. This is a more cohesive package that shows the dimensions of the window that everyone would be looking for. Take a look through this and pay close attention to items that show dimensions like I have snipped below. I have also highlighted below reasons why historic agencies do not usually approve Vinyl windows.

- Vinyl windows typically don't match historic window dimensions / Proportions (This is why the dimensions for your window system is important, as historic double hung window typically have a larger bottom rail than the rest of the stile and rail)

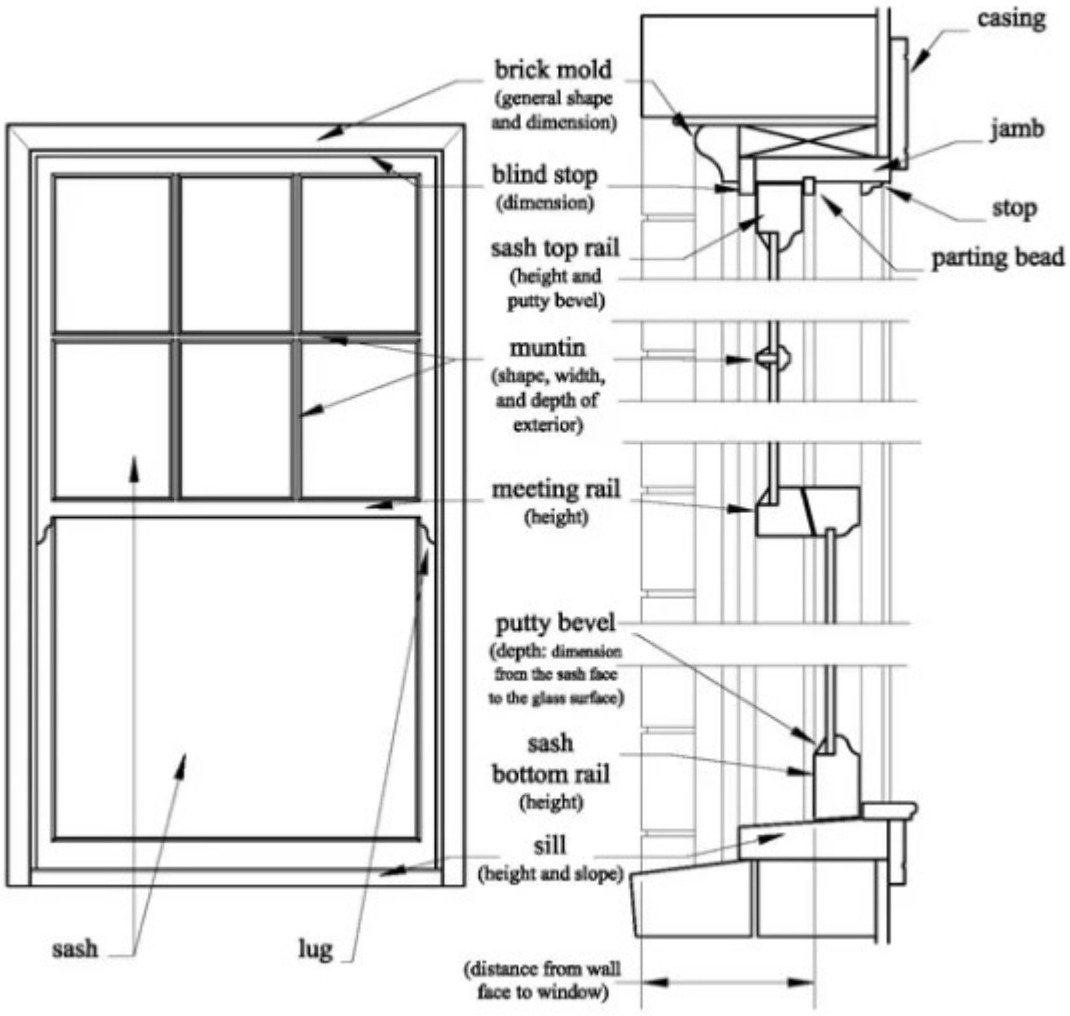

- Vinyl windows, if not a reputable brand, material can be flimsy and shiny
- Connection points at wood can be caulked and painted, vinyl can not do that, so if not a reputable brand, gaps can be seen where pieces come together, so this can be a visible difference from the sidewalk / street

(You can see below this window system does not have a much larger bottom rail as would be historically acceptable, so please ensure that window you are proposing for this installation has that as shown in the detail above)

REPLACEMENT FRAME
Standard Block Frame

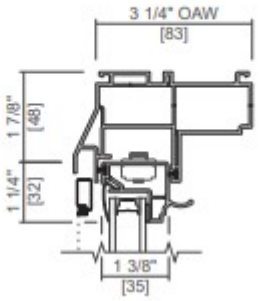

Encompass by Pella® Double-Hung Window

Unit Sections - 3-1/4" Replacement Frame

FULL SCREEN

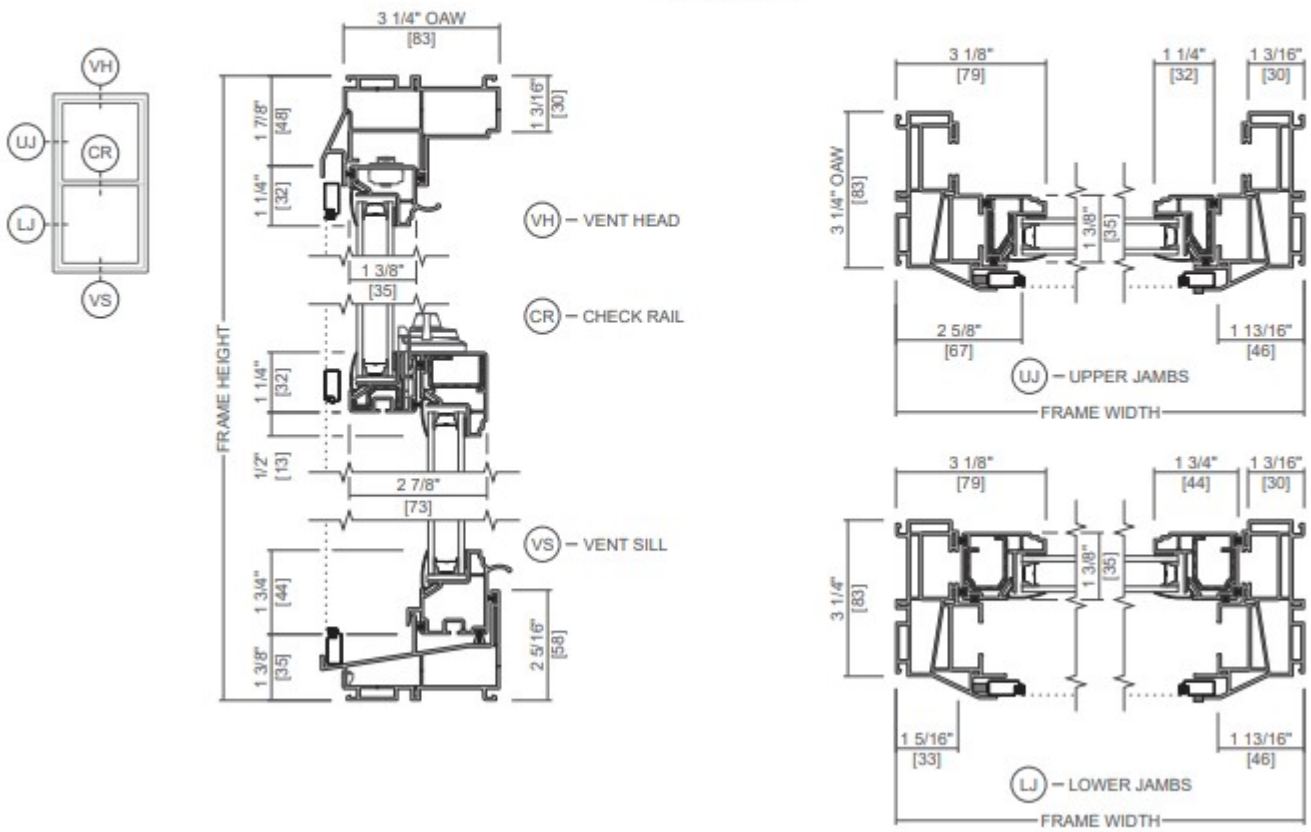

Let me know what you can get from your window company and we can go from there.

Thank you,

Julia Epstein, AIA, LEED AP BD+C

Architect | 904.425.5280

From: Wells, Arimus - PDCM <ArimusW@coj.net>
Sent: Thursday, August 28, 2025 1:27 PM
To: lilaloconsulting@gmail.com

Cc: Julia Epstein <jepstein@dasherhurst.com>
Subject: COA-25-32249 at 1552 Pearl St N

Hi Lauren,

As a follow-up to the Historic Preservation Commission meeting yesterday, I am connecting you with Commissioner Epstein. She will walk you through the terms of the window specifications sheet.

Also, Commissioner Hoff expressed interest is having you obtain a Wood Destroying Organism (WDO) report or written opinion from a window restoration professional regarding the condition of the window. I know Staff previously recommended this to you a few months ago, but I figured I would bring this to your attention again.

Best Regards,

Arimus

--

Arimus T. Wells, MPA

City Planner Supervisor

Historic Preservation Section

Planning Department

214 North Hogan Street, Suite 300

Jacksonville, FL 32202

Office: 904-255-7824

NEW

EXHIBITS

08/27/25

Window of Northeast Florida
9450 Philips Highway, Suite 7
Jacksonville, FL 32256
Phone: 904-443-7001

www.WindowWorldNEFL.com

Customer: Lauren Prater Phone (h) 516-343-3663

Install Address: 1552 N. Pearl st. Jacksonville Fl. Phone (w) _____

Bill Address: 32206 E-mail _____

- Work addendum -

- Remove + Replace 23 windows with Vinyl double hung windows.
- NO Muntins (Grids)

Installation Process to include removing interior quarter round. Sashes to be removed. New vinyl box frame window to be inserted, quarter round then reinstalled.

- (Any rotten wood on existing frame to be repaired @ 100.00 per board)
- everything to be caulked + sealed.
- New windows will be back set 2 3/4 inches from face of exterior.
- Existing original sashes to be saved for historic value.

You the buyer may cancel this transaction at any time prior to midnight of the third business day after the date of this transaction. Notice of cancellation must be in writing postmarked no later than midnight of the following third business day.
THIS IS A CUSTOM ORDER NOT FOR RESALE!

This Window World® Franchise is independently owned and operated by Wall to Wall Windows and Doors LLC d/b/a Window World of Northeast Florida, under license from Window World, Inc.

Salesman 8-08-25 Date

Owner Date

Owner Date

NEFL Extra Work 09-22 White Copy - Original Yellow Copy - File Pink Copy - Customer

Hayes Printing 336-667-1116

,

ORDER: 1665943
ORDER DATE: 8/8/2025
ORDER CONTACT:

QUOTE

INVOICE INFORMATION
House

,

SHIPPING INFORMATION
House

,

SHIP VIA:

ORDER	ORDER DATE	PO NUMBER	CUSTOMER REF	TERMS
1665943	8/8/2025		Lauren Prater	

ITEM	DESCRIPTION	QTY	SIZE	PRICE	TOTAL	
1	7700 DOUBLE HUNG WHITE REPLACEMENT FOAM WRAP ACCESSORY TRACK FILLER INSIDE TIP TO TIP CLEAR/CLEAR HALF SCREEN FIBERGLASS BALANCE TRACK COVER FLORIDA BUILDING CODE APPROVED PRODUCTS=[LC35-(36X72, RF=NO, GS=DS) FL15819.8] ESTAR CLIMATE ZONES=[N/A] SOLAR HEAT GAIN=[0.56] U-FACTOR=[0.46] VISIBLE TRANSMISSION=[0.59] CLEAR OPENING HEIGHT=[26.764] CLEAR OPENING SQUARE FEET=[5.353] CLEAR OPENING WIDTH=[28.803]	1	34 W X 69 H RO: 34.25 W X 69.25 H TTT: 34 W X 69 H			

TOTALS: 1 **SUBTOTAL:**

TOTAL:

COMMENT:

Drawings - Order: 1665943

ITEM 1		
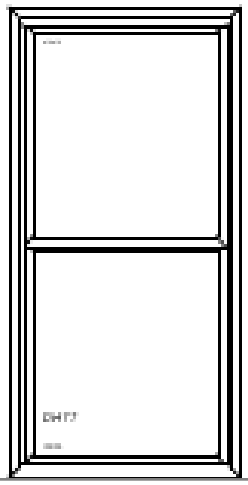		
7700 DOUBLE HUNG **34 W X 69 H** **QTY: 1**		

DIRECTV

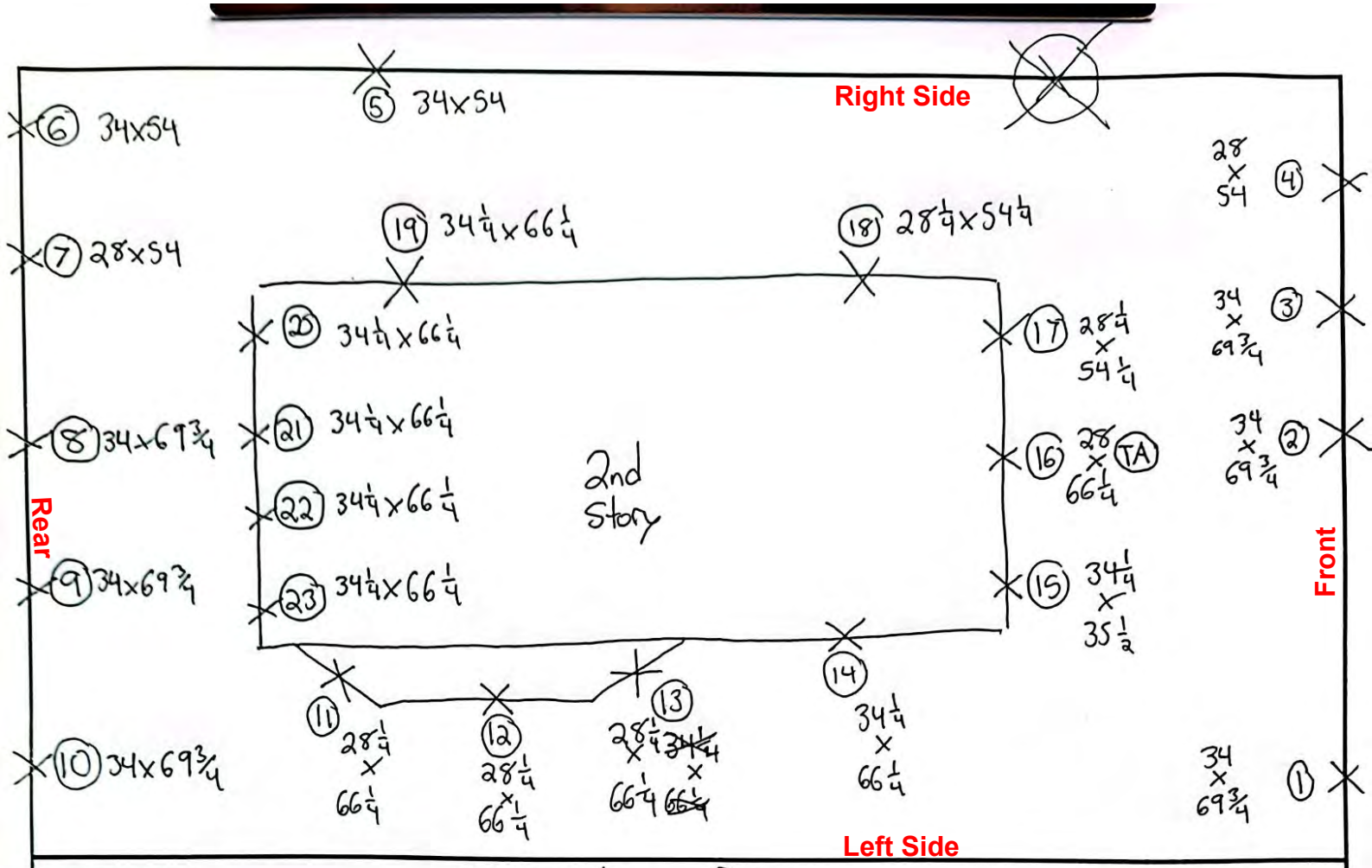

CONTRACT #_____ CUSTOMER: Lauren Prater _____ # OF STORIES____

Ext. Construction Type:_____

#	SERIES	MODEL	INT	EXT	WIDTH		HEIGHT	LEG	Mull	TEMP	OBS	GRIDS STYLE	GRIDS PATT.	ORIEL	SC	FIN
1																
2																
3																
4																
5																
6																
7																
8																
9																
10																
11																
12																
13																
14																
15																

Tracking # _____

COJ Window Survey Form – Cover Page

Date Completed _____

Required Documents

☑	Completed window survey form list to include **ALL** windows on the structure (often requires multiple pages)
☑	Photographs or drawings of each side of the structure with all windows numbered to correspond with the "Window #" in the survey form list
☑	Close-up detailed numbered photos showing all damage identified in the window survey form list
☑	Proposed replacement window product material (wood, vinyl, clad, etc.) and exterior grid pattern (3/1, 4/4, 6/6, 1/1, etc)

** Please note that if one of the required documents is not submitted with the application, it will cause a delay in the review/process time.*

Project Information

24	Total number of window openings
23	Number of windows that will be replaced
24	Number of historic/original windows
	Number of non-historic windows
4"	Exterior window sill depth in inches (Window Recession)

Definitions

- **Historic Windows:** Windows that have been on the structure for 50 or more years.
- **Non-Historic Windows:** Replacement windows that have been on the structure for less than 50 years
- **Original:** Windows that were installed when the structure was originally constructed.
- **Sill Depth:** How deep into the wall plane a window is recessed

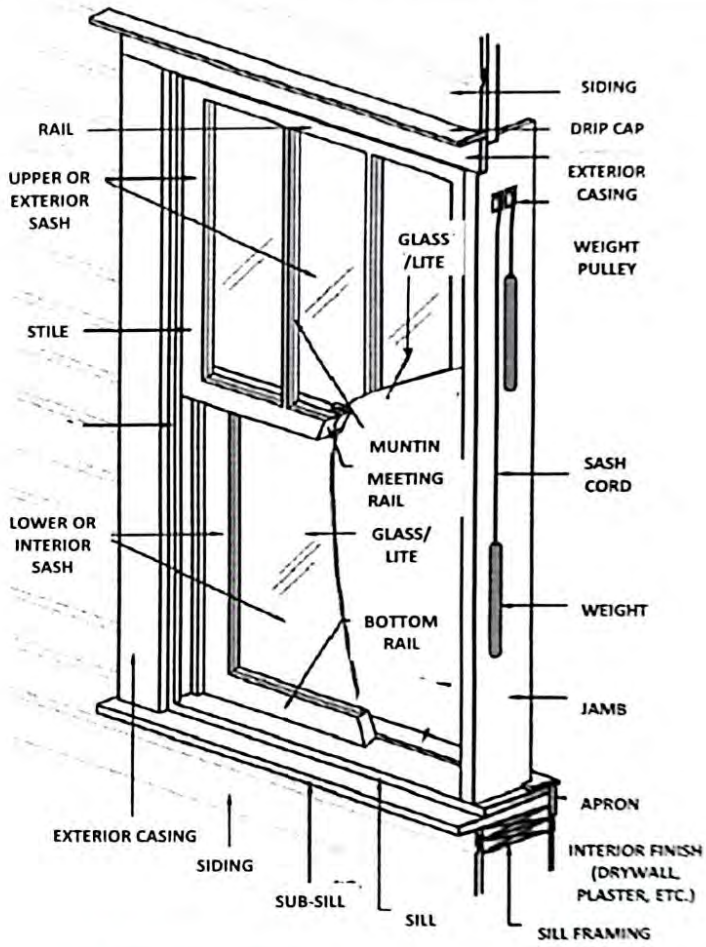

Authorization

I hereby certify that I have read and understand the information contained in the Window Survey Form and the HPS Window Supplement, that I am the owner or authorized agent for the owner with authority to complete this Form, and that all of the information contained in this application, including the attachments, is true and correct to the best of my knowledge.

Owner

Print name: _____

Signature: _____

Applicant or Agent *(if different than owner)*

Print name: _____

Signature: _____

COJ Window Survey Form – Page # ____ out of _____

Window #	Existing (Example)					Proposed (Example)			
	Material:	Dimensions:	Pattern:	Condition:	Damage:	Scope of Work	Material:	Dimensions:	Pattern:
1.	Wood	34x70	NONE	Bad	Rot	Replace	Vinyl	34x70	None
Additional Info:									

Window #	Existing					Proposed			
	Material:	Dimensions:	Pattern:	Condition:	Damage:	Scope of Work	Material:	Dimensions:	Pattern:
2.	Wood	34x70	None	Bad	Rot	Replace	Vinyl	34x70	None
Additional Info:									

Window #	Existing					Proposed			
	Material:	Dimensions:	Pattern:	Condition:	Damage:	Scope of Work	Material:	Dimensions:	Pattern:
3.	Wood	34x70	None	Bad	Rot	Replace	Vinyl	34x70	None
Additional Info:									

Window #	Existing					Proposed			
	Material:	Dimensions:	Pattern:	Condition:	Damage:	Scope of Work	Material:	Dimensions:	Pattern:
4	Wood	28x54	None	Bad	Rot	Replace	Vinyl	28x54	None
Additional Info:									

Window #	Existing					Proposed			
	Material:	Dimensions:	Pattern:	Condition:	Damage:	Scope of Work	Material:	Dimensions:	Pattern:
5	Wood	34x54	None	Bad	Rot	Replace	Vinyl	34x54	None
Additional Info:									

Window #	Existing					Proposed			
	Material:	Dimensions:	Pattern:	Condition:	Damage:	Scope of Work	Material:	Dimensions:	Pattern:
6	Wood	34x54	None	Bad	Rot	Replace	Vinyl	34x54	None
Additional Info:									

COJ Window Survey Form – Page # ____ out of _____

Window #	Existing					Proposed			
	Material:	Dimensions:	Pattern:	Condition:	Damage:	Scope of Work	Material:	Dimensions:	Pattern:
7.	Wood	28x54	None	Bad	Rot	Replace	Vinyl	28x54	None
Additional Info:									
Window #	**Existing**					**Proposed**			
	Material:	Dimensions:	Pattern:	Condition:	Damage:	Scope of Work	Material:	Dimensions:	Pattern:
8.	Wood	34x70	None	Bad	Rot	Replace	Vinyl	34x70	None
Additional Info:									
Window #	**Existing**					**Proposed**			
	Material:	Dimensions:	Pattern:	Condition:	Damage:	Scope of Work	Material:	Dimensions:	Pattern:
9.	Wood	34x70	None	Bad	Rot	Replace	Vinyl	34x70	None
Additional Info:									
Window #	**Existing**					**Proposed**			
	Material:	Dimensions:	Pattern:	Condition:	Damage:	Scope of Work	Material:	Dimensions:	Pattern:
10.	Wood	34x70	None	Bad	Rot	Replace	Vinyl	34x70	None
Additional Info:									
Window #	**Existing**					**Proposed**			
	Material:	Dimensions:	Pattern:	Condition:	Damage:	Scope of Work	Material:	Dimensions:	Pattern:
11.	Wood	28x66	None	Bad	Rot	Replace	Vinyl	28x66	None
Additional Info:									
Window #	**Existing**					**Proposed**			
	Material:	Dimensions:	Pattern:	Condition:	Damage:	Scope of Work	Material:	Dimensions:	Pattern:
12.	Wood	28x66	None	Bad	Rot	Replace	Vinyl	28x66	None
Additional Info:									

COJ Window Survey Form – Page # ____ out of _____

Window #	Existing					Proposed			
	Material:	Dimensions:	Pattern:	Condition:	Damage:	Scope of Work	Material:	Dimensions:	Pattern:
13.	Wood	28x66	None	Bad	Rot	Replace	Vinyl	28x66	None
Additional Info:									

Window #	Existing					Proposed			
	Material:	Dimensions:	Pattern:	Condition:	Damage:	Scope of Work	Material:	Dimensions:	Pattern:
14.	Wood	34x66	None	Bad	Rot	Replace	Vinyl	28x66	None
Additional Info:									

Window #	Existing					Proposed			
	Material:	Dimensions:	Pattern:	Condition:	Damage:	Scope of Work	Material:	Dimensions:	Pattern:
15	Wood	34x35	None	Bad	Rot	Replace	Vinyl	34x35	None
Additional Info:									

Window #	Existing					Proposed			
	Material:	Dimensions:	Pattern:	Condition:	Damage:	Scope of Work	Material:	Dimensions:	Pattern:
16	Wood	28x66	None	Bad	Rot	Replace	Vinyl	28x66	None
Additional Info:									

Window #	Existing					Proposed			
	Material:	Dimensions:	Pattern:	Condition:	Damage:	Scope of Work	Material:	Dimensions:	Pattern:
17	Wood	28x54	None	Bad	Rot	Replace	Vinyl	28x54	None
Additional Info:									

Window #	Existing					Proposed			
	Material:	Dimensions:	Pattern:	Condition:	Damage:	Scope of Work	Material:	Dimensions:	Pattern:
18	Wood	28x54	None	Bad	Rot	Replace	Vinyl	28x54	None
Additional Info:									

COJ Window Survey Form – Page # ____ out of _____

Window #	Existing					Proposed			
	Material:	Dimensions:	Pattern:	Condition:	Damage:	Scope of Work	Material:	Dimensions:	Pattern:
19.	Wood	34x66	None	Bad	Rot	Replace	Vinyl	34x66	None
Additional Info:									
Window #	**Existing**					**Proposed**			
	Material:	Dimensions:	Pattern:	Condition:	Damage:	Scope of Work	Material:	Dimensions:	Pattern:
20.	Wood	34x66	NONE	Bad	Rot	Replace	Vinyl	34x66	None
Additional Info:									
Window #	**Existing**					**Proposed**			
	Material:	Dimensions:	Pattern:	Condition:	Damage:	Scope of Work	Material:	Dimensions:	Pattern:
21.	Wood	34x66	None	Bad	Rot	Replace	Vinyl	34x66	None
Additional Info:									
Window #	**Existing**					**Proposed**			
	Material:	Dimensions:	Pattern:	Condition:	Damage:	Scope of Work	Material:	Dimensions:	Pattern:
22.	Wood	34x66	None	Bad	Rot	Replace	Vinyl	34x66	None
Additional Info:									
Window #	**Existing**					**Proposed**			
	Material:	Dimensions:	Pattern:	Condition:	Damage:	Scope of Work	Material:	Dimensions:	Pattern:
23	Wood	34x66	None	Bad	Rot	Replace	Vinyl	34x66	None
Additional Info:									
Window #	**Existing**					**Proposed**			
Front porch 24	Material:	Dimensions:	Pattern:	Condition:	Damage:	Scope of Work	Material:	Dimensions:	Pattern:
	Wood	34x70	Design	Good	NONE	NONE	—	—	—
Additional Info:									

ORIGINAL

EXHIBITS

Application For Certificate Of Appropriateness

Application Info

Tracking #	32249	**Application Status**	FOUND SUFFICIENT
Date Started	04/11/2025	**Date Submitted**	04/11/2025

Planning and Development Department Info

COA # COA-25-32249

Admin Review ☑

Admin Recommendation FORWARD

Admin Date Of Action N/A

Forwarded to JHPC ☑

JHPC Meeting Date 7/23/2025

Staff Recommendation N/A

JHPC Recommendation N/A

JHPC Date Of Action N/A

Admin Details
N/A

JHPC Details
N/A

General Information On Applicant

Last Name PRATER **First Name** LAUREN **Middle Name**

Company Name

Mailing Address 10752 DEERWOOD PARK BLVD STE 100

City JACKSONVILLE **State** FL **Zip Code** 32256

Phone 516 343 3663 **Fax** 516 343 3663 **Email** LILALOCONSULTING@GMAIL.COM

General Information On Owner(s)

Agent represents ◉ **Owner** ○ **Contractor** ○ **Architect** ○ **Consultant** ○ **Other**

Last Name PRATER **First Name** LAUREN **Middle Name**

Company/Trust Name

Mailing Address 10752 DEERWOOD PARK BLVD STE 100

City JACKSONVILLE **State** FL **Zip Code** 32256

Phone 5163433663 **Fax** 5163433663 **Email** LILALOCONSULTING@GMAIL.COM

Description Of Property

Property Appraiser's RE #(s) (10 digit number with a space ###### ####)

Map	RE#
	071164 0000

Location Of Property

General Location
Springfield Historic District

House #	Street Name, Type and Direction	Zip Code
1552	PEARL ST N	32206

Type Of Improvement

- [ ] **Addition**
- [ ] **Driveway**
- [ ] **New Construction**
- [ ] **Accessory Structures**
- [ ] **Alteration**
- [ ] **Relocation**
- [x] **Window Replacement**
- [ ] **Other/Minor Repairs**
- [ ] **Fencing**
- [ ] **Demolition**
- [ ] **Reroof**

Describe proposed work below. Note affected features and changes in design or materials. Be as specific, brief, and legible as possible.
(Example: reroof; replacing gray 3-tab shingles with black architectural shingles).

Proposed Work
THE EXISTING WINDOWS ARE IN A STATE OF DISREPAIR AND UNFORTUNATELY BEYOND THE POINT OF PRACTICAL RESTORATION. THEY ARE DETERIORATING SIGNIFICANTLY, WITH ISSUES SUCH AS ROT, DRAFTS, AND NON-FUNCTIONING SASHES THAT COMPROMISE BOTH SAFETY AND THE STRUCTURAL INTEGRITY OF THE HOME. GLASS IS MISSING AND OR BROKEN IN MANY WINDOWS. TO ADDRESS THIS, I AM SEEKING PERMISSION TO REPLACE 23 DAMAGED WINDOWS. THE REPLACEMENTS WILL BE CHOSEN WITH GREAT CARE. IMPORTANTLY, I WILL NOT BE REPAIRING THE DOWNSTAIRS FRONT-FACING WINDOWS, AS THEY ARE BOTH CHARMING AND ESSENTIAL TO THE HISTORIC INTEGRITY OF THE HOME. I WANT TO ENSURE THAT THE VISUAL CHARACTER OF THE HOME REMAINS INTACT. THANK YOU FOR CONSIDERING THIS REQUEST. I AM COMMITTED TO MAINTAINING THE HISTORIC VALUE OF THE PROPERTY WHILE ENSURING ITS CONTINUED LIVABILITY.

Addition Information

Is this a violation? Check the box if it is. [ ]

If you have been working with a planner choose one from the list FIGUEROA, BRITTANY

Window Replacement - Required Attachments For Complete Application

- [x] **Window Survey** - Survey of existing windows including numbered photos of all windows/openings with elevation key and notes explaining window condition. If you need, there is a Window Survey template in the Forms & Instructions link to the left.
- [x] **Window Design** - Proposed window design, light pattern and materials.
- [x] **Window Product** - Brochure/sample of window product.

Additional Documents Provided

	Description
[x]	PICS SET 1
[x]	PICS SET 2
[x]	PICS SET 3
[x]	PICS SET 4
[x]	PICS SET 5

☑	PICS SET 6
☑	PICS SET 7
☑	PICS SET 8
☑	PICS SET 9

Application Certification

For applications that can be approved administratively, there is no application fee.

For all applications that must go before the Historic Preservation Commission, a fee will be applied based on the type of work performed.

Application completeness review: All applications for Certificate of Appropriateness ("Application") will be reviewed for completeness by Planning and Development Department Staff. Any Application determined to be incomplete, will be returned to the applicant with comments detailing the deficiencies. No further action on the Application will take place until the application deficiencies are addressed. Once the Application is determined to be complete, Planning and Development Department Staff will prepare an invoice for the cost of the Application.

Payment deadline: The Invoice must be paid by the payment deadline in order to have the Application heard on the next scheduled Jacksonville Historic Preservation Commission (JHPC) regular meeting. The payment deadline is outlined on the City of Jacksonville's Planning and Development Department Website. Only sufficient applications will be invoiced. It is for the benefit of the applicant to supply staff with a sufficient applications in advance of the payment deadline. Due to the complexity and volume of Applications received by the Planning and Development Department, there is no guarantee that COA Applications submitted on the day of the payment deadline will be heard at the next regular meeting of the JHPC.

I, hereby, certify that I am the owner or the authorized agent of the owner(s) of the property described herein, that all answers to the questions in this application and all information contained in the material attached to and made a part of this application, are accurate and true to the best of my knowledge and belief. I also attest by my signature that all required information for this application is completed and duly attached in the prescribed order. Furthermore, if the package is found to be lacking the above requirements, I understand that the application will be returned for correct information.

☑ I UNDERSTAND THE ABOVE DISCLAIMER REGARDING APPLICATION REVIEW. AGREED TO AND SUBMITTED.

City of Jacksonville, Florida

Planning Department

Community Planning Division
214 North Hogan Street, Suite 300
Jacksonville, FL 32202
(904) 255-7800
www.coj.net

ONE CITY. ONE JACKSONVILLE.

NOTICE OF PUBLIC HEARING SIGN POSTING AFFIDAVIT FOR APPLICATION FORWARDED TO THE JACKSONVILLE HISTORIC PRESERVATION COMMISSION

Date: 6/25/2025

COA#: COA-25-32249 or CR778225

Address: 1552 N. Pearl St Jax FL 32225

Owner: Lauren r Arthur Prats III

As required by Sec. 307.106.(f) of the City of Jacksonville Ordinance Code: The applicant for a certificate of appropriateness shall post signs at intervals of not more than 200 feet along all street sides of land upon which the request for a certificate of appropriateness is made. Signage should be posted at least 14 days prior to the scheduled public hearing. Where the land does not have frontage on a public street, the signs shall be erected on the nearest street right-of-way with an attached notation indicating generally the direction and distance to the land upon which the application for a certificate of appropriateness has been filed, or at such other locations and at such intervals, as determined by the Planning and Development Department, as will ensure that the signs will be seen by as many persons as possible. The signs shall be maintained by the applicant until a final determination has been made by the Commission on the application for a certificate of appropriateness. If the signs are not posted within the time requirements, the public hearing notice will be deemed inadequate and no action shall be taken until proper posting is accomplished. The signs shall be removed by the applicant within ten days after final action.

I hereby attest that the attached pictures show the NOTICE OF PUBLIC HEARING SIGNS

provided to me for application CR-778225 **were posted on the property/site located at:**

071164-0000
Real Estate Number(s)

1552 N. Pearl St
Street Address

~~Jax~~ FL 32225
City, State Zip Code

Printed Name Lauren Prats

Signature

Dated this 25th day of June, 2025.

PRATER LAUREN
12527 ARROWLEAF LN
JACKSONVILLE, FL 32225-6854
PRATER ARTHUR III

Primary Site Address
1552 N PEARL ST
Jacksonville FL 32206-

Official Record Book/Page
21286-01680

Tile #
6412

1552 N PEARL ST

Property Detail

RE #	071164-0000
Tax District	USD1
Property Use	0100 Single Family
# of Buildings	1
Legal Desc.	For full legal description see Land & Legal section below
Subdivision	01188 SRINGFELD S/D BLK 3,5,9 ,
Total Area	4354
Characteristics	Historic Designation

The sale of this property may result in higher property taxes. For more information go to Save Our Homes and our Property Tax Estimator . 'In Progress' property values, exemptions and other supporting information on this page are part of the working tax roll and are subject to change. Certified values listed in the Value Summary are those certified in October, but may include any official changes made after certification Learn how the Property Appraiser's Office values property.

Value Summary

Value Description	2024 Certified	2025 In Progress
Value Method	CAMA	CAMA
Total Building Value	$110,917.00	$110,468.00
Extra Feature Value	$880.00	$884.00
Land Value (Market)	$43,560.00	$43,560.00
Land Value (Agric.)	$0.00	$0.00
Just (Market) Value	$155,357.00	$154,912.00
Assessed Value	$129,301.00	$154,912.00
Cap Diff/Portability Amt	$26,056.00 / $0.00	$0.00 / $0.00
Exemptions	$32,736.00	See below
Taxable Value	$96,565.00	See below

Taxable Values and Exemptions – In Progress

If there are no exemptions applicable to a taxing authority, the Taxable Value is the same as the Assessed Value listed above in the Value Summary box.

County/Municipal Taxable Value
No applicable exemptions

SJRWMD/FIND Taxable Value
No applicable exemptions

`School Taxable Value
No applicable exemptions

Sales History

Book/Page	Sale Date	Sale Price	Deed Instrument Type Code	Qualified/Unqualified	Vacant/Improved
21286-01680	11/20/2024	$156,000.00	WD - Warranty Deed	Qualified	Improved
20498-02278	11/14/2022	$100.00	MS - Miscellaneous	Unqualified	Improved
07232-01365	6/11/1991	$11,500.00	WD - Warranty Deed	Unqualified	Improved
07232-01364	5/31/1991	$12,545.00	WD - Warranty Deed	Unqualified	Improved
04817-00500	2/14/1979	$20,000.00	WD - Warranty Deed	Unqualified	Improved
03372-01010	6/22/1972	$3,000.00	WD - Warranty Deed	Unqualified	Improved

Extra Features

LN	Feature Code	Feature Description	Bldg.	Length	Width	Total Units	Value
1	FPMR7	Fireplace Masonry	1	0	0	1.00	$884.00

Land & Legal

Land

LN	Code	Use Description	Zoning Assessment	Front	Depth	Category	Land Units	Land Type	Land Value
1	1200	COMM/RES/OFF	CRO-S	0.00	0.00	Common	4,356.00	Square Footage	$43,560.00

Legal

LN	Legal Description
1	2-5 37-2S-26E
2	SPRINGFIELD
3	S1/2 LOT 9 BLK 24

Buildings

Building 1
Building 1 Site Address
1552 N PEARL ST Unit
Jacksonville FL 32206-

Building Type	0102 - SFR 2 STORY
Year Built	1916
Building Value	$110,468.00

Type	Gross Area	Heated Area	Effective Area
Finished upper story 1	1072	1072	1018
Base Area	1056	1056	1056
Finished Open Porch	240	0	72
Total	2368	2128	2146

Element	Code	Detail
Exterior Wall	7	7 Cem Fib Shing
Exterior Wall	16	16 Frame Stucco
Roof Struct	3	3 Gable or Hip
Roofing Cover	12	12 Modular Metal
Interior Wall	3	3 Plastered
Int Flooring	12	12 Hardwood
Heating Fuel	4	4 Electric
Heating Type	4	4 Forced-Ducted
Air Cond	3	3 Central

Element	Code	Detail
Stories	2.000	
Bedrooms	3.000	
Baths	2.000	

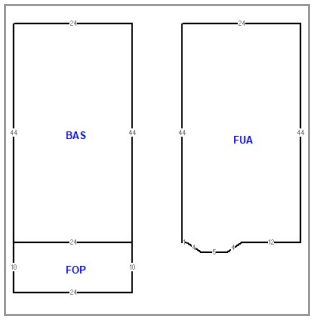

Rooms / Units	1.000	

2024 Notice of Proposed Property Taxes Notice (TRIM Notice)

Taxing District	Assessed Value	Exemptions	Taxable Value	Last Year	Proposed	Rolled-back
Gen Govt Ex B & B	$129,301.00	$32,736.00	$96,565.00	$1,014.05	$1,092.82	$1,058.35
Urban Service Dist1	$129,301.00	$32,736.00	$96,565.00	$0.00	$0.00	$0.00
Public Schools: By State Law	$130,414.00	$30,000.00	$100,414.00	$289.03	$310.48	$316.20
By Local Board	$130,414.00	$30,000.00	$100,414.00	$204.13	$225.73	$222.26
FL Inland Navigation Dist.	$129,301.00	$32,736.00	$96,565.00	$2.58	$2.78	$2.57
Water Mgmt Dist. SJRWMD	$129,301.00	$32,736.00	$96,565.00	$16.07	$17.31	$16.28
School Board Voted	$130,414.00	$30,000.00	$100,414.00	$90.81	$100.41	$100.41
Urb Ser Dist1 Voted	$129,301.00	$32,736.00	$96,565.00	$0.00	$0.00	$0.00
			Totals	$1,616.67	$1,749.53	$1,716.07

Description	Just Value	Assessed Value	Exemptions	Taxable Value
Last Year	$139,210.00	$120,805.00	$31,200.00	$89,605.00
Current Year	$155,357.00	$129,301.00	$32,736.00	$96,565.00

2024 TRIM Property Record Card (PRC)

This PRC reflects property details and values at the time of the original mailing of the Notices of Proposed Property Taxes (TRIM Notices) in August.

Property Record Card (PRC)

The PRC accessed below reflects property details and values at the time of Tax Roll Certification in October of the year listed.

2024

2023

2022

2021

2020

2019

2018

2017

2016

2015

2014

• To obtain a historic Property Record Card (PRC) from the Property Appraiser's Office, submit your request here:

More Information

ontact Us | Parcel Tax Record | GIS Map | Map this property on Google Maps | City Fees Record

window#1

window#1

window#2

window#2
SCOTT
ALARM

window#3

window#3

window#4

window#4

window#5

window#5

window#6
DISH

window#6

window#7

window#7

window#8

window#8

window#9

window#9

window#10

window#10
SCOTT
ALARM

window#11

window#12

window#13

window#14

window
#11,12,13,14
window#24

window#15

window#15

window#16

window#16

window#17

window#17

window#18

window#18

window#19

window#19

window#20

window#20

window#21

window#21

window#22

window#22

window#23

window#23

,

ORDER: 1581131
ORDER DATE: 3/27/2025
ORDER CONTACT:

QUOTE

INVOICE INFORMATION
House

,

SHIPPING INFORMATION
House

,

SHIP VIA:

ORDER	ORDER DATE	PO NUMBER	CUSTOMER REF	TERMS
1581131	3/27/2025		Lauren Prater	

ITEM	DESCRIPTION	QTY	SIZE	PRICE	TOTAL	
1	7700 DOUBLE HUNG WHITE REPLACEMENT FOAM WRAP ACCESSORY TRACK FILLER INSIDE TIP TO TIP LOWE/ARGON/CLEAR HALF SCREEN FIBERGLASS BALANCE TRACK COVER FLORIDA BUILDING CODE APPROVED PRODUCTS=[LC35-(36X72, RF=NO, GS=DS) FL15819.8] ESTAR CLIMATE ZONES=[S,] SOLAR HEAT GAIN=[0.2] U-FACTOR=[0.29] VISIBLE TRANSMISSION=[0.46] CLEAR OPENING HEIGHT=[26.764] CLEAR OPENING SQUARE FEET=[5.353] CLEAR OPENING WIDTH=[28.803]	21	34 W X 72 H			

TOTALS: 21 **SUBTOTAL:**
TOTAL:

COMMENT:

Drawings - Order: 1581131		
ITEM 1		
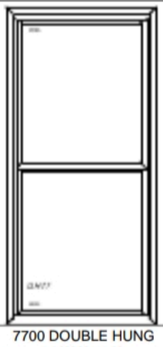		
7700 DOUBLE HUNG **34 W X 72 H** **QTY: 21**		

FLORIDA MASTER SITE FILE
Site inventory Form

SITE NO.

SITE NAME: 1552 Pearl St. SURVEY DATE: 09/30/85
ADDRESS OF SITE: 1552 Pearl St.
INSTRUCTION FOR LOCATING: N/A

LOCATION: Springfield 24 9
Subdivision Name Block No. Lot No.
COUNTY: Duval
DISTRICT NAME IF APPLICABLE:
OWNER OF SITE: NAME:
ADDRESS:
ADDRESS:
TYPE OF OWNERSHIP: RECORDING DATE: / /
RECORDER: NAME & TITLE: Historic Property Associates/Consultant
ADDRESS: P.O. Box 1002
St. Augustine, FL 32085

CONDITION OF SITE: Check One		INTEGRITY OF SITE: Check one or more	
			ORIGINAL USE pvt.residence
EXCELLENT	x	ALTERED	PRESENT USE pvt.residence
x GOOD		UNALTERED	DATES c.+1910
FAIR	x	ORIGINAL SITE	CULTURE/PHASE American
DETERIORATED		RESTORED: / /	PERIOD: 20th Century
		MOVED: / /	

NR CLASSIFICATION CATEGORY: building DATE LISTED ON NR: / /

THREATS TO SITE: Check one or more

ZONING	TRANSPORTATION
DEVELOPMENT	FILL
DETERIORATION	DREDGE
BORROWING	
OTHER (See Remarks Below)	

AREAS OF SIGNIFICANCE: Architecture

SIGNIFICANCE

See Continuation Sheet

RECORD NUMBER 1415

ARCHITECT:

BUILDER:

STYLE AND/OR PERIOD: frame vernacular

PLAN TYPE: rectangular

EXTERIOR FABRIC(S): stone: perma #
asbestos: siding
STRUCTURAL SYSTEM(S): wood frame: balloon

PORCHES: E/1-story, 3-bay, access N; fluted Ionic cols.,
(center caps. missing), extended corn. bays
ORIENTATION: east

FOUNDATION: piers: brick; stone, perma

ROOF TYPE: gable

SECONDARY ROOF STRUCTURE(S): dormer: gable #

CHIMNEY LOCATION: N&S: offset, interior: lateral slope

WINDOW TYPE: DHS, 1/1, wood # transom/sidelights #
DHS, 1/1, wood, Victorian lead glass, upper pane
CHIMNEY: brick: corbelled

ROOF SURFACING: metal: shingles

ORNAMENT EXTERIOR: wood

NO. OF CHIMNEYS 2 NO. OF STORIES 2

NO. OF DORMERS: 1 OUTBUILDINGS:

SURROUNDINGS:
SITE SIZE (approx. acreage) LT1

TOWNSHIP	RANGE	SECTION
2S	26	37

UTM ZONE	UTM EASTING	UTM NORTHI

PHOTOGRAPHIC RECORDS NUMBERS:

CONTINUATION SHEET:

1552 Pearl St. is a two-story frame vernacular residential building. It embodies the historic and architectural qualities of the Springfield neighborhood through its period of construction, its design, its historical associations and its integrity.

Constructed c. 1910, it was originally the residence of Mrs. Lula H. Lanier.

CITY DIRECTORY RESEARCH FORM

ADDRESS: 1552 Pearl

OLD ADDRESS: 1752

YEAR	OWNER*/OCCUPANT	OCCUPATION	OTHER
1910-11	Mrs. Lida H. Lanier	(wid. James C)	
1912-13	Jefferson D. Rooney	(Mary L.) asst. industrial	agt. SAL Ry
1915	Gideon B. Travis	(Drusie) inspr. U.S. Immigration	Service
1918-20	Marion B. Craig	(Elizabeth) slsmn	
1925	Bernard Blattner	(Jennie) B. Blattner & Co	hair mfr.
1930	Charles G. Fulcher	(Minniebel) formn Gulf	Refining Co.

SUBDIVISION	BLOCK	LOT

* SPECIFY IF OWNER WITH ASTERISK

CONTRIBUTING STRUCTURES - SPRINGFIELD HISTORIC DISTRICT
NATIONAL REGISTER OF HISTORIC PLACES
HD - 91 - 1

STREET NUMBER	STREET NAME	TP	DIR	HISTORIC SITE NAME
1431	PEARL	ST	N	1431-7 PEARL ST.
1440	PEARL	ST	N	1440 - 42 PEARL ST.
1445	PEARL	ST	N	1445 - 49 PEARL ST.
1448	PEARL	ST	N	1448 PEARL ST.
1500	PEARL	ST	N	1500-1504 PEARL ST.
1506	PEARL	ST	N	1506-8 PEARL ST.
1519	PEARL	ST	N	1519 PEARL ST.
1523	PEARL	ST	N	1523-5 PEARL ST.
1524	PEARL	ST	N	OLIVER HARDY HOUSE
1528	PEARL	ST	N	1528 PEARL ST.
1529	PEARL	ST	N	1529-31 PEARL ST.
1532	PEARL	ST	N	1532-4 PEARL ST.
1533	PEARL	ST	N	CUBAN CONSULATE
1536	PEARL	ST	N	1536 PEARL ST.
1541	PEARL	ST	N	1541-3 PEARL ST.
1542	PEARL	ST	N	1542 PEARL ST.
1544	PEARL	ST	N	1544-6 PEARL ST.
1545	PEARL	ST	N	1545-7 PEARL ST.
1552	PEARL	ST	N	1552 PEARL ST.
1555	PEARL	ST	N	1555 PEARL ST.
1556	PEARL	ST	N	1556 PEARL ST.
1612	PEARL	ST	N	1612 PEARL ST.
1615	PEARL	ST	N	1615 PEARL ST.
1616	PEARL	ST	N	1616-8 PEARL ST.
1620	PEARL	ST	N	1620 PEARL ST.
1624	PEARL	ST	N	1624-6 PEARL ST.
1625	PEARL	ST	N	1625 PEARL ST.
1631	PEARL	ST	N	1631 PEARL ST.
1632	PEARL	ST	N	1632 PEARL ST.

SOURCE: JACKSONVILLE PLANNING DEPARTMENT
SEPTEMBER 25, 1991

E. Condemned Properties

Jacksonville
Historic Preservation
Commission

F. Historic Designations

Jacksonville
Historic Preservation
Commission

G. Certificates of Appropriateness

Jacksonville
Historic Preservation
Commission

COA-25-32716

1417 Laura St N

October 22, 2025

Report of the Jacksonville Planning and Development Department
Certificate of Appropriateness Application COA-25-32716

Address: 1417 Laura Street North, RE# 071046-0000

Location: East side of Laura Street North, between 4th Street West and 5th Street West

Owner: Richard Trendel
Kymata Investments, LLC
2440 Mayport Road, Suite 7
Jacksonville, FL 32233

Applicant: Richard Trendel
Petra Contracting, LLC
2440 Mayport Road, Suite 7
Jacksonville, FL 32233

Year Built: *c.* 1904 (Property Appraiser)

Designation: Springfield; Non-Contributing

Request: New Construction – Addition
Alterations – Window Replacement

Summary Scope of Work:

1. Restore front porch on the first-floor front elevation
2. Two-story addition along the rear elevation
3. Wholesale window replacement *(administrative)*
4. Installation of fencing *(administrative)*

Recommendation: **Approve with Conditions**

Conditions:

Porch Restoration and two-story addition along the rear elevation

1. Materials shall be substantially consistent with the elevation drawings dated **August 25, 2025**, or as otherwise approved by the Historic Preservation Section.
2. Location and orientation shall be as substantially shown on the site plan dated **August 25, 2025**.

3. Finished floor height shall be within 6 inches of the contributing structure located at **1437 Laura Street N (RE: 071050-0000)**, or as otherwise approved by the Historic Preservation Section.
4. Prior to permitting, the applicant shall demonstrate that the front setback will be within 25 percent of the average required front yard of adjacent contributing structures.
5. Columns shall have caps and bases.
6. The foundation for the porch shall have a stucco or parge finish
7. The first-floor doors along the front and rear elevations shall align with the porch steps (not located behind the columns).
8. All windows on the structure shall have a two-over-two light pattern.
9. A minimum of five (5) full-sized windows with a two-over-two light pattern shall be installed along the first-floor and second-floor side (south) elevation.
10. The fascia boards and soffits shall be composed of wood or a cementitious material (no vinyl or PVC).
11. The porch railing system shall be made of wood or wood composite, and the spindles shall be set in between an upper and lower railing with no exposed ends.
12. The front entry walkway shall be limited to the width of the front porch steps and shall be composed of brick-like pavers, poured concrete, or hexagonal brick pavers.
13. The front door shall have clear glass without any decorative etching or frosted glass.
14. If a well is required for water service, it shall be placed in the rear yard or a non-street visible location.
15. Prior to the final inspection of any building permit, the owner or their agent shall submit to the Historic Preservation Section an affidavit and any supplementary evidence that verifies compliance with all conditions of the COA final order.

Wholesale Window Replacement (Administrative)

16. Any exterior trim work, including traditional sill, sideboards, and header with crown molding, shall be retained or replicated in wood or cementitious materials, but not vinyl.
17. All new windows shall fit the original openings both horizontally and vertically and be recessed four (4) inches within the opening (not flush with the wall or have permanent nailing fins).
18. The light pattern shall have exterior raised profiled muntins (true or simulated divided lights).
19. Any sash-style window groupings shall have traditional 4-6 inch flat mullions between window units.
20. All new windows shall be wood, wood clad, wood blend, vinyl or cellular PVC.
21. All windows shall be installed in accordance with the latest version of the HPS Window Supplement.

Installation of Fencing

22. The location of the fencing and gate(s) shall be substantially consistent with the site plan dated **July 8, 2025**.
23. Fencing installation shall be consistent with the Fencing and Wall Guidelines.

PROJECT DESCRIPTION

COA-25-32716 seeks to alter the front and rear elevation of a two-story non-contributing structure. The scope of work includes re-opening the previously enclosed first-floor porch along the front elevation and constructing a two-story addition along the rear elevation. The majority of lots along this portion of the block contain structures with full-width porches on the first floor. As designed, the proposed full-width porch along the front elevation will consist of a shingled hip roof, 4x4 columns with decorative molding, and a CMU foundation with no finish. Meanwhile, the proposed 693 square-foot two-story addition will consist of a shingled gable roof with cementitious shake siding along the gable end, horizontal lap siding, a concrete foundation wall, and four-over-four windows.

The application also includes the installation of fencing and wholesale window replacement. Pursuant to the authority granted to Staff through the 2025 COA Matrix, these items can be approved administratively, subject to the conditions listed in the recommendation section of this report. Staff is also authorized to approve the restoration of an original feature (the first-floor porch) when historic documentation is available; however, Staff has no documentation illustrating the original aesthetic of the front porch. As such, the analysis in this report focuses on reconstruction of the front porch and the rear addition.

STAFF SUMMARY AND ANALYSIS

Staff considered the applicable Design Guidelines for the Historic District and the Ordinance Code criteria found in Sections 307.106(k), 307.106(l), 307.106(m), 307.106(n), and 307.106(o). The following is Staff's analysis:

- According to the 1913 Sanborn Maps, the subject property originally had two (2), detached, two-story single-family dwellings: 1417 Laura Street and 1415 Laura Street. The structures remained in this configuration until 1969 when 1416 Laura Street was demolished via permit M-6900110.000. That same year, a one-story masonry addition was constructed on the remaining structure via permit B-69-00104.000. Around the same time, the structure was converted from residential use to institutional use.
- The Historic Preservation Guidelines for the Springfield Historic District recognize that entrance porches are an important design element of historic residences in the Springfield Historic District. Serving as a transitional space between the exterior and the interior, and defining and protecting the primary entryway into the residence, front porches are the principal location for ornamentations and detailing such as piers, columns, rails and spindles, as well as brackets and other jig-sawn woodwork. The size, style, sense of openness and detailing are all important attributes of porches and should be preserved or properly restored based on physical or documentary evidence. Moreover, the Design Guidelines for the District reference Standards Two (2) and Nine (9) of the Secretary of the Interior's Standards for Rehabilitation:
    - Standard Two (2) refers to the historic character of a property being retained and preserved amid the removal of historic materials or features. The applicant's scope of work would bring the home closer to its original state and restore its architectural character—thereby achieving compatibility with the massing, size, scale and architectural features of adjacent properties, consistent with Sections 307.106(k)(1) and 307.106(l)(2 and 6).
    - Standard Nine (9) emphasizes that exterior alterations shall not destroy historic materials, is differentiated from the old while being compatible in massing, size, scale, and architectural features in order to preserve the historical integrity of the property and its immediate surroundings. Restoring the altered feature, as conditioned, reinstates the historical and architectural integrity of the original front porch.
- The proposed work can be completed within a reasonable period of time, consistent with Section 307.106(k)(4).
- The scale and massing of the proposed structure are reasonably consistent with other surrounding two-story residences. The front and side setbacks as shown on the site plan dated August 25, 2025, are consistent with other nearby structures and have been conditioned to ensure compatibility. For these reasons, the development is consistent with Sections 307.106(m)(3 and 6).

- As designed, the height and roof form of the proposed addition is compatible with the existing height and roof form of the primary structure. As such, the proposed work is consistent with Sections 307.106(k)(1) and 307.106(m)(1 and 4).
- The proposed elevations depict four-over-four light pattern windows with a header height characteristic of window designs in the Springfield Historic District. The majority of the windows are vertically oriented and of a traditional size. Based on Staff's conditions, the windows shall have a two-over-two light pattern, which is the historic light pattern for the structure. In order to achieve consistency with Section 307.106(m)(2), Staff recommends adding a minimum of five (5) full-sized windows with a two-over-two grid pattern along the first-floor and second-floor side (south) elevation. Currently, the proposed south elevation is devoid of any window openings, which is the antithesis of the Springfield Design Guidelines.
- The proposed design changes maintain the alignment of horizontal rhythms along the streetscape. As such, the proposed structure is compatible with the directional expression of surrounding structures and consistent with Section 307.106(m)(7).
- Consistent with Section 307.106(m)(8), the proposed design changes contain many architectural details that are in keeping with historic elements found throughout the Springfield Historic District. Such details include:
    - The Hardie board lap siding, a contemporary material used to replicate the finish and dimension of wood lap siding, which is common in Springfield;
    - Vertically-oriented windows spaced evenly throughout the structure; and
    - Tapered porch columns with caps and bases.
- The Design Guidelines for the District reference Standards Nine and Ten of the Secretary of the Interior's Standards for Rehabilitation. Standard Nine emphasizes that exterior alterations shall not destroy historic materials and are differentiated from the old while being compatible in massing, size, scale, and architectural features in order to preserve the historical integrity of the property and its immediate surroundings. Standard Ten refers to the nature of additions and if removed in the future, the essential form and integrity of the historic property and its environment would be unimpaired. No significant historic fabric will be impacted since the proposed addition is located on the rear of the structure and can be removed at a later time without negatively impacting the historic structure as a whole. As such, the proposed scope of work is consistent with Sections 307.106(k)(1 and 2), the Historic District Design Guidelines, Section on "Additions" and "New Construction."

For these reasons, it is the position of the Planning and Development Department that the proposed work under the stated conditions is consistent with:

- Section 307.106(k) General Standards: 1, 2, and 4
- Section 307.106(m) Guidelines on Alterations: 2 and 6
- Section 307.106(m) Guidelines on New Construction: 1-4 and 6-8
- Historic District Design Guidelines, Section on "New Construction" and "Porches, Porte Cochere and Garages"

CODE CRITERIA AND DESIGN GUIDELINES

General Criteria

- 307.106(k)(1) - The effect of the proposed work on the landmark, landmark site or property within an historic district upon which such work is to be done;

- 307.106(k)(2) - The relationship between such work and other structures on the landmark site or other property in the historic district;

- 307.106(k)(4) - Whether the plans may be carried out by the applicant within a reasonable period of time.

Alterations

- 307.106(l)(2) - The distinguishing original qualities or character of a building, structure, or site shall not be destroyed. The removal or alteration of any historic material or distinctive architectural features shall be avoided when possible.

- 307.106(l)(6) - Deteriorated architectural features shall be repaired rather than replaced, wherever possible. In the event replacement is necessary, the new material shall match the material being replaced in composition, design, color, texture, and other visual qualities. However, technologically advanced materials shall be considered and used as replacement alternatives. Repair or replacement of missing architectural features shall be based on accurate duplications of features, substantiated by historical, physical, or pictorial evidence rather than on conjectural designs or the availability of different architectural elements from other buildings or structures.

New Construction

- 307.106(m)(1) - *Height.* The height of any proposed alteration or construction shall be compatible with the style and character of the landmark and with surrounding structures in an historic district.

- 307.106(m)(2) - *Proportions of windows and doors.* The proportions and relationships between doors and windows shall be compatible with the architectural style and character of the landmark and with surrounding structures in an historic district.

- 307.106(m)(3) - *Relationship of building masses, setbacks and spaces.* The relationship of a structure within an historic district to the open space between it and adjoining structures shall be compatible.

- 307.106(m)(4) - *Roof shape.* The design of the roof shall be compatible with the architectural style and character of the landmark and surrounding structures in an historic district.

- 307.106(m)(6) - *Scale.* The scale of the structure after alteration, construction, or partial demolition shall be compatible with its architectural style and character and with surrounding structures in an historic district.

- 307.106(m)(7) - *Directional expression.* Facades in historic districts shall blend with other structures with regard to directional expression. Structures in an historic district shall be compatible with the dominant horizontal or vertical expression of surrounding structures. The directional expression of a landmark after alteration, construction, or partial demolition shall be compatible with its original architectural style and character.

- 307.106(m)(8) - *Architectural details.* Architectural details including materials and textures shall be treated so as to make a landmark compatible with its original architectural style and character and to preserve and enhance the architectural style or character of a landmark or historic district. The Commission will give recommendations as to appropriate colors for any landmark or historic district.

Historic District Design Guidelines, "Porches, Porte Cochere and Garages," and "New Construction"

- Secretary of the Interior's Standards for Rehabilitation (2): The historic character of a property shall be retained and preserved. The removal of historic materials or alteration of features and spaces that characterize a property shall be avoided.

- Secretary of the Interior's Standards for Rehabilitation (9): New additions, exterior alterations, or related new construction shall not destroy historic materials that characterize the property. The new work shall be differentiated from the old and shall be compatible with the massing, size, scale, and architectural features to protect the historic integrity of the property and its environment.

- Secretary of the Interior's Standards for Rehabilitation (10)*: New additions and adjacent or related new construction shall be undertaken in such a manner that if removed in the future, the essential form and integrity of the historic property and its environment would be unimpaired.*

LOCATION MAP

PICTURE OF PROPERTY WITH POSTED SIGN

1913 SANBORN FIRE INSURANCE MAPS

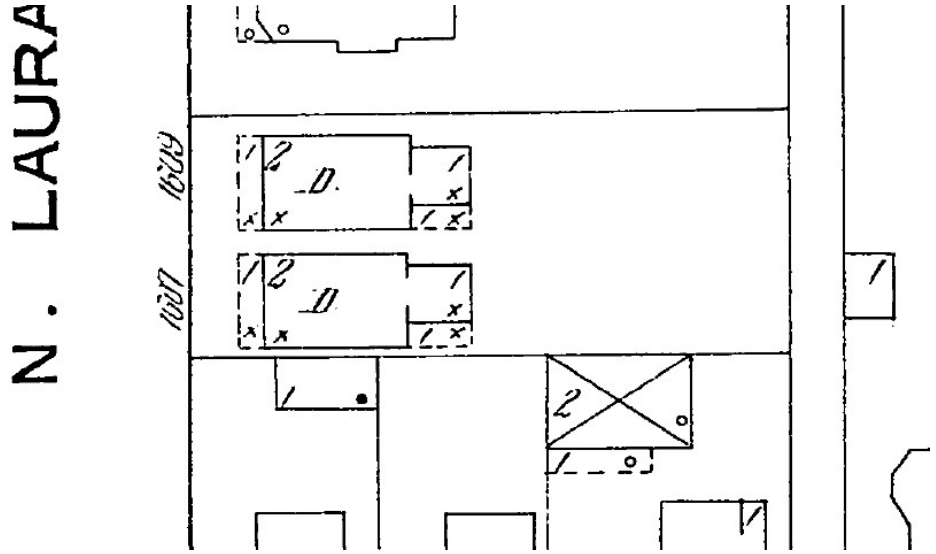

SITE PLANS DATED AUGUST 25, 2025

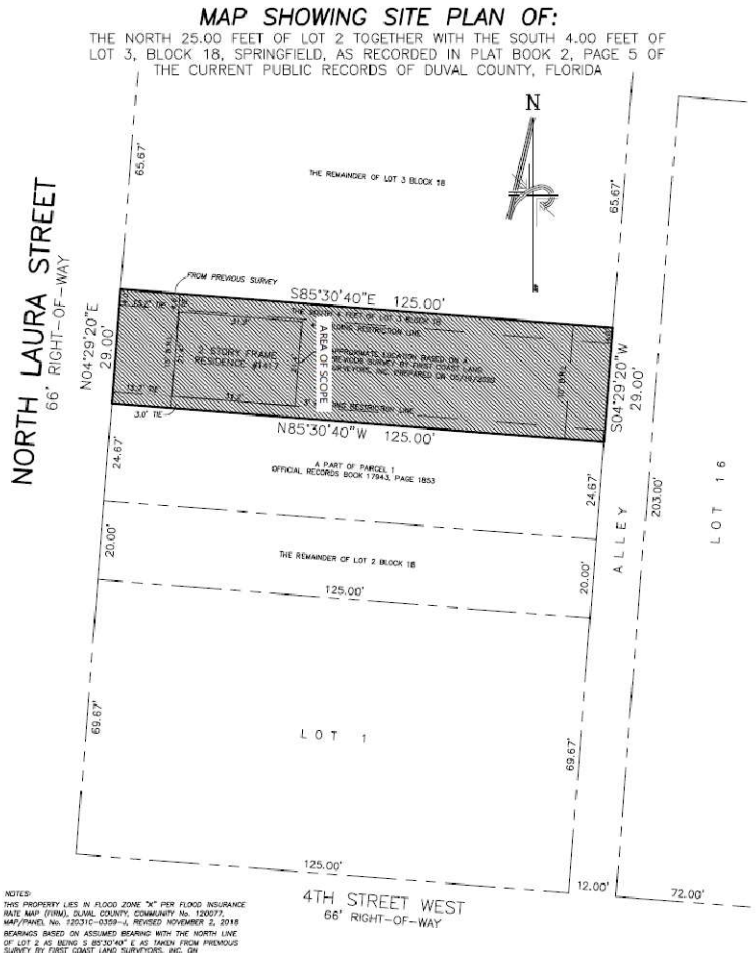

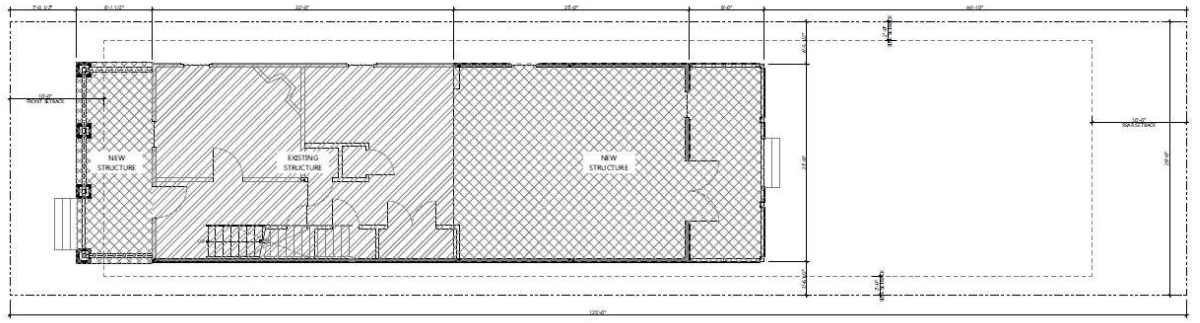

1 ARCHITECTURAL SITE PLAN

ELEVATION DRAWINGS DATED AUGUST 25, 2025

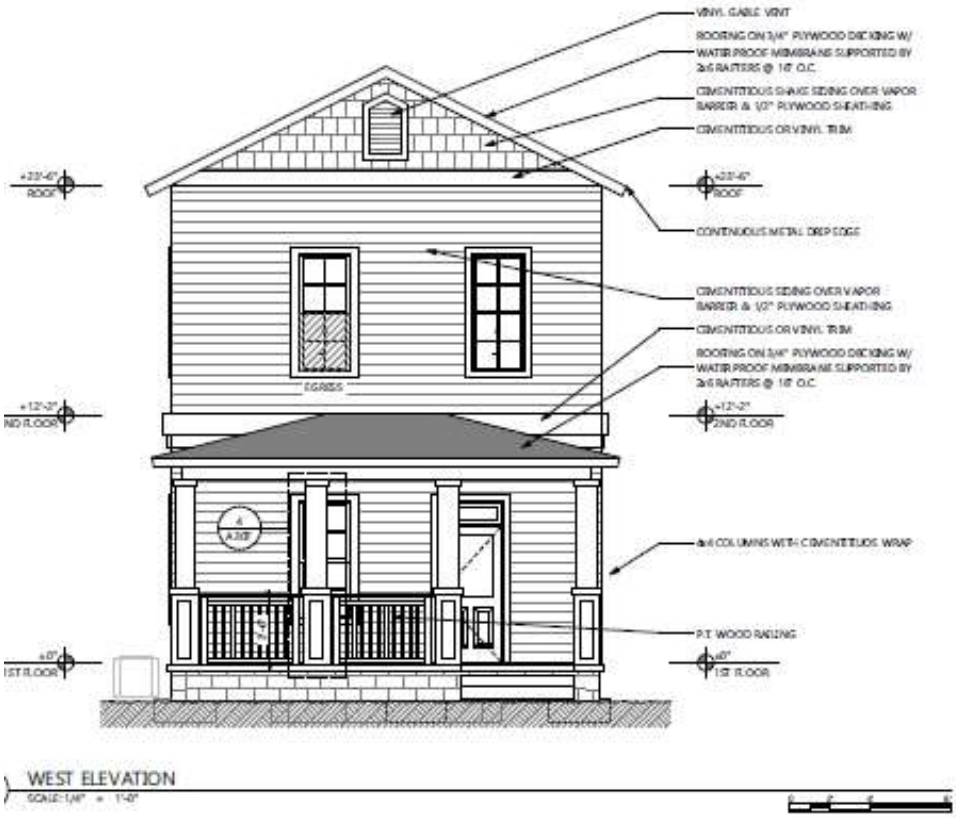

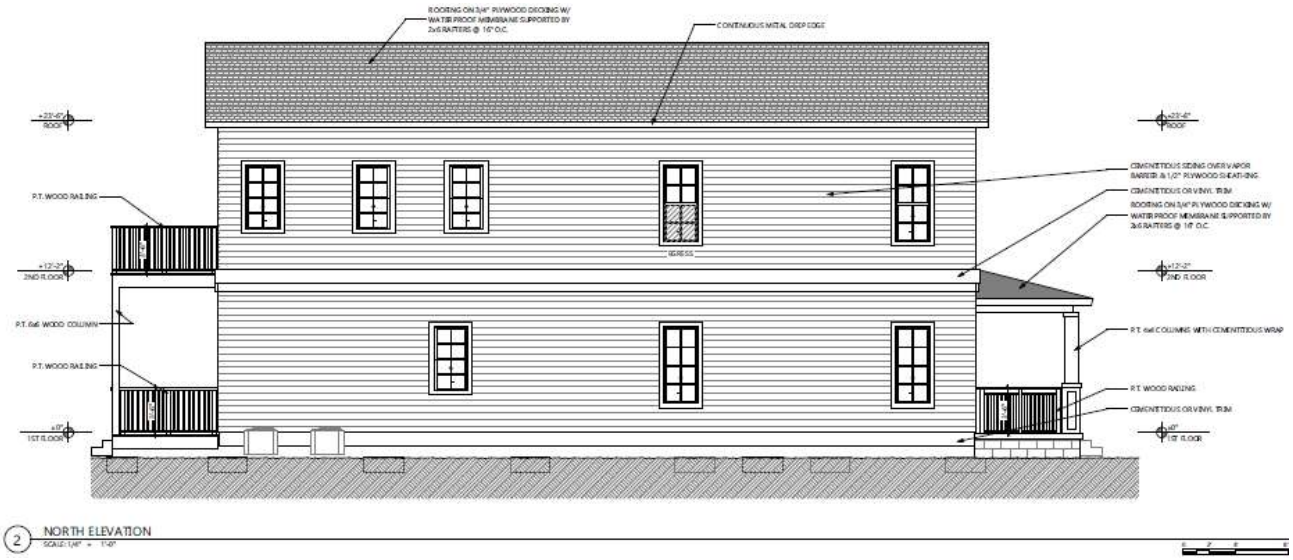

ELEVATION DRAWINGS DATED AUGUST 25, 2025 (CONTINUED)

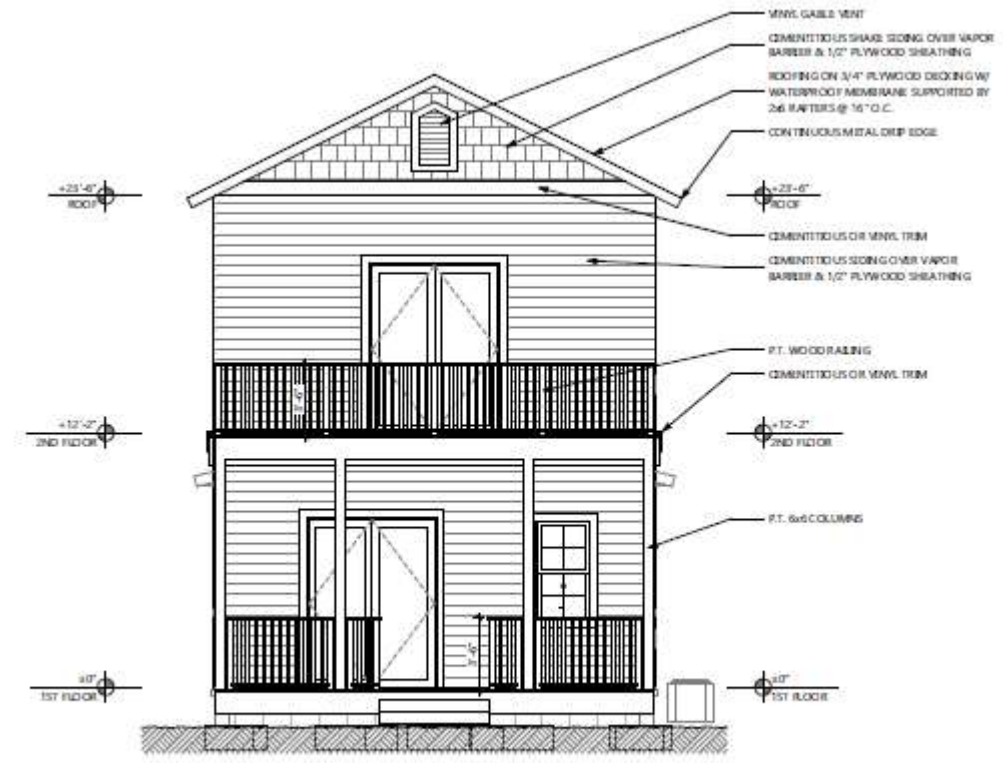

1 EAST ELEVATION
SCALE: 1/4" = 1'-0"

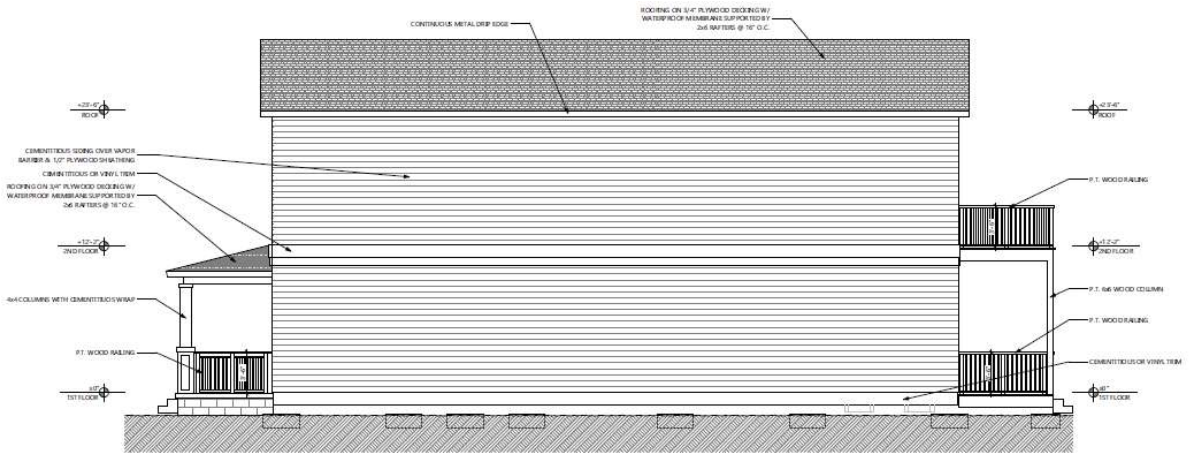

2 SOUTH ELEVATION
SCALE: 1/4" = 1'-0"

FENCING SITE PLAN DATED JULY 8, 2025

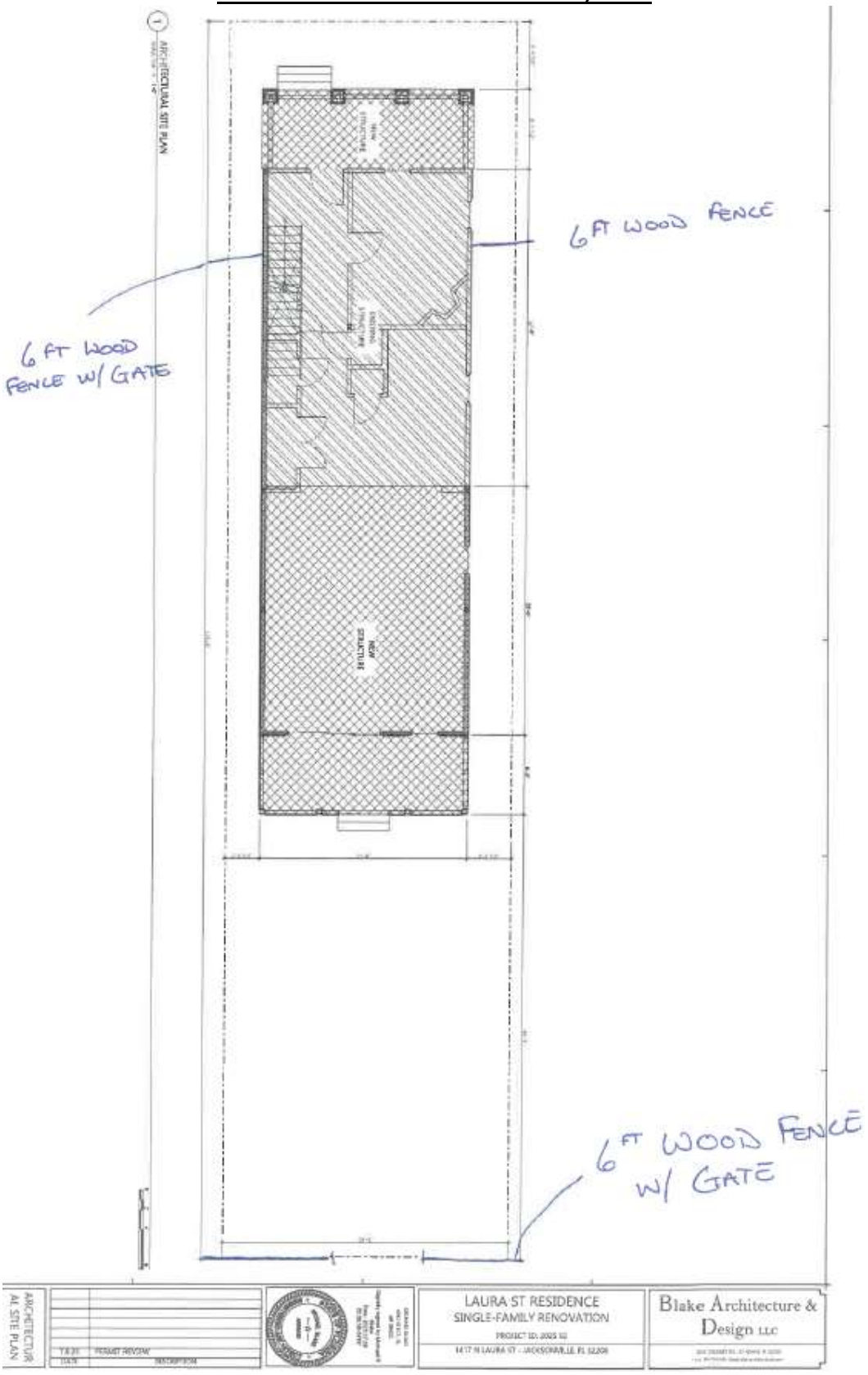

Application For Certificate Of Appropriateness

Application Info

Tracking #	32716	**Application Status**	ASSIGNED PLANNER
Date Started	07/23/2025	**Date Submitted**	07/24/2025

Planning and Development Department Info

COA # N/A

Admin Review ☐

Admin Recommendation N/A

Admin Date Of Action N/A

Forwarded to JHPC ☐

JHPC Meeting Date N/A

Staff Recommendation N/A

JHPC Recommendation N/A

JHPC Date Of Action N/A

Admin Details
N/A

JHPC Details
N/A

General Information On Applicant

Last Name TRENDEL **First Name** RICHARD **Middle Name**

Company Name
PETRA CONTRACTING

Mailing Address
2440 MAYPORT RD., SUITE 3

City JACKSONVILLE **State** FL **Zip Code** 32233

Phone 904 703 7778 **Fax** **Email** RICH@PETRAJAX.COM

General Information On Owner(s)

Agent represents ◉ **Owner** ○ **Contractor** ○ **Architect** ○ **Consultant** ○ **Other**

Last Name TRENDEL **First Name** RICHARD **Middle Name**

Company/Trust Name
KYMATA INVESTMENTS, LLC

Mailing Address
2440 MAYPORT RD., SUITE 3

City JACKSONVILLE **State** FL **Zip Code** 32233

Phone 9047037778 **Fax** **Email** RICH@PETRAJAX.COM

Description Of Property

Property Appraiser's RE #(s) (10 digit number with a space ###### ####)

Map	RE#
	071046 0000

Location Of Property

General Location
Springfield Historic District

House #	Street Name, Type and Direction	Zip Code
1417	LAURA ST N	32206

Type Of Improvement

- [x] **Addition**
- [ ] **Driveway**
- [ ] **New Construction**
- [ ] **Accessory Structures**
- [x] **Alteration**
- [ ] **Relocation**
- [x] **Window Replacement**
- [ ] **Other/Minor Repairs**
- [x] **Fencing**
- [ ] **Demolition**
- [x] **Reroof**

Existing Roof Material Composition Shingles (3 Tab/Architectural)

Proposed Roof Material Composition Shingles (3 Tab/Architectural)

If there is more than one roof material on the structure, please apply for a separate COA.

Structure Type Select...

Describe proposed work below. Note affected features and changes in design or materials. Be as specific, brief, and legible as possible.
(Example: reroof; replacing gray 3-tab shingles with black architectural shingles).

Proposed Work
COMPLETE REMODEL, PLUS AN ADDITION TO THE BACK OF THE HOME.

Addition Information

Is this a violation? Check the box if it is. [x]

If you have been working with a planner choose one from the list WELLS, ARIMUS

Addition - Required Attachments For Complete Application

- [x] **Site Plan -** Existing/proposed site plan with addition identified. *(To scale bar scaled dimensional drawings needed. Directional arrows needed.)*
- [x] **Existing Elevations -** Existing elevations or photos of exising sides. *(To scale bar scaled dimensional drawings needed.)*
- [x] **Proposed Elevations -** Proposed front, sides and rear elevations. *(To scale bar scaled dimensional drawings needed.)*
- [x] **Overall Photos Of Site**
- [x] **Photos Of Addition Area**
- [x] **Description Of Any Demo**

Alteration - Required Attachments For Complete Application

- [x] **Site Plan -** Site plan if elevation includes new. *(To scale bar scaled dimensional drawings needed. Directional arrows needed.)*
- [x] **Elevations -** Existing and proposed elevations or photos. *(To scale bar scaled dimensional drawings needed.)*
- [x] **Area Pictures -** Pictures of area affected by alteration.
- [x] **Structure Photos -** Overall photos of structure.

☑ **Product -** Brochure/specifications and sample.

Window Replacement - Required Attachments For Complete Application

☑ **Window Survey -** Survey of existing windows including numbered photos of all windows/openings with elevation key and notes explaining window condition. If you need, there is a Window Survey template in the Forms & Instructions link to the left.

☑ **Window Design -** Proposed window design, light pattern and materials.

☑ **Window Product -** Brochure/sample of window product.

Fencing - Required Attachments For Complete Application

☑ **Site Plan -** Site plan/survey with fence placement.

☑ **Fence Height, Design, And Materials -** Please provide an example of the style of fence you would like to install. You may add the height and fence material to the description area in Step 2 under "Proposed Work".

☑ **Photos Of Property**

Reroof/Minor Repairs

For reroofs and minor repairs there are no required documents. However, once a planner is assigned and reviews the request, they may need additional documents or pictures to process your request.

Additional Documents Provided

	Description
☑	REVISED PROJECT PLANS_08-25-25
☑	WINDOW PRODUCT INFORMATION

Application Certification

This application for Certificate of Appropriateness ("Application") is eligible for automatic approval. Please read the disclaimer and conditions below in order to submit the Application.

Application Conditions:

1. If any deteriorated wood visible from the exterior needs to be repaired (rafter ends, soffits, fascia, etc.), the repairs shall be made with like materials. If wholesale replacement is necessary and the existing materials are not historic, then the replacement materials shall be historically appropriate.

2. Shingles shall not be stacked on the roof in one location.

3. This Application is only for the scope of work addressed within the Application. Any additional exterior work done to the structure(s) or the site itself will require the submission of a new Application.

Application Disclaimer:

1. All applications are subject to a 21-day appeal period. Any work performed within 21 days of the approved date of this Application may be at risk.

2. The approved scope of work must be initiated within one (1) year and completed within five (5) years of the administrative approval date.

3. The Application granted herein shall not be construed as an exemption from any other applicable local, state, or federal laws, regulations, requirements, permits, or approvals.

4. All other applicable local, state, or federal permits or approvals shall be obtained before the commencement of the development or use

5. All work is subject to inspection.

I hereby certify that I am the owner or the authorized agent of the owner(s) of the property described herein, that all answers to the questions in this application are accurate and true to the best of my knowledge and belief. I also attest by my signature that all required information for this application is completed and duly attached in the prescribed order. Furthermore, if the application is found to be lacking the above requirements, I understand that the Application will be returned for correct information.

☑ I UNDERSTAND THE ABOVE DISCLAIMER AND ADMINISTRATIVE CONDITIONS REGARDING APPLICATION APPROVAL. I UNDERSTAND THE ABOVE DISCLAIMER REGARDING APPLICATION REVIEW. AGREED TO AND SUBMITTED.

LAURA ST RESIDENCE
SINGLE-FAMILY RENOVATION
1417 N LAURA ST
FL, 32206

SHEET LIST		
ID	SHEET NAME	REV.
A300	COVER SHEET	
A301	SURVEY	
A302	ARCHITECTURAL SITE PLAN	
A303	FLOOR PLANS	
A304	ROOF PLAN & DETAILS	
A305	RCP'S	
A306	ELEVATIONS & DETAILS	
A307	ELEVATIONS & DETAILS	
A308	SECTION & WALL SECTIONS	
A309	DOORS & WNDOWS	
S1	STRUCTURAL NOTES	
S2	FOUNDATION PLAN & DETAILS	
S3	FRAMING PLANS	
E1	POWER PLANS	
P1	PLUMBING PLANS	
M1	HVAC PLANS	

APPLICABLE CODES:

THE PROJECT SHALL BE DESIGNED AND CONSTRUCTED IN ACCORDANCE WITH THE FOUR VOLUMES OF THE FLORIDA BUILDING CODE, 2023 EDITION
1) VOLUME 1 - BUILDING, WHICH INCLUDES ENERGY, ACCESSIBILITY AND STATE AGENCY REGULATIONS.
2) VOLUME 2 - PLUMBING
3) VOLUME 3 - MECHANICAL AND FUEL GAS
4) VOLUME 4 - THE NATIONAL ELECTRICAL CODE (STANDARD NFPA 70-2020)
5) FLORIDA FIRE PREVENTION CODE 8TH EDITION, NFPA 1 FIRE CODE 2024 EDITION & NFPA 101 LIFE SAFETY CODE 2024 EDITION

BUILDING TYPE:

CONSTRUCTION TYPE: V UNPROTECTED
OCCUPANCY CLASS: R3

BUILDING DESCRIPTION:

THE PROJECT CONSISTS OF THE RENOVATION OF AN EXISTING 2-STORY RESIDENCE. THERE WILL BE NEW FLOOR, WALL, AND ROOF STRUCTURES ADDED TO THE EXISTING RESIDENCE. A NEW ADDITION WILL BE ADDED TO THE REAR ON BOTH FLOORS WITH 1ST & 2ND FLOOR PORCHES. THE NEW STRUCTURE SHAL BE CONCRETE SPREAD FOOTERS WITH 16" PEIR BLOCKS. THE 1ST FLOOR FRAMING SHALL BE WOOD JOISTS @ 16" O.C., 2ND FLOOR FRAMING SHALL BE WOOD JOISTS SUPPORTED BY LVL BEAMS, AND THE ROOF SHAL BE CONVENTIONAL FRAMING WITH RIDGE BEAM AND RAFTERS @ 16" O.C. EXTERIOR SHALL BE A MIX OF CEMENTITIOUS HORIZONTAL AND SHAKE SIDING.

GENERAL NOTES:

1) ALL PRODUCTS SELECTED BY CONTRACTOR MUST BE INCLUDED IN THE FLORIDA PRODUCT APPROVAL LIST (APPROVAL INFORMATION TO BE SUBMITTED UPON REQUREST BY CONTRACTOR) & MUST BE INSTALLED IN STRICT ACCORDANCE W/ MANUFACTURER'S REQUIREMENTS.
2) PRODUCTS THAT SHALL CONFORM TO NOTE NUMBER ONE INCLUDE (BUT NOT LIMITED TO) METAL STUDS, STEEL REBAR, EIFS FINIDSH, WOOD STUDS, METAL FLASHING, PEEL & STICK MOISTURE BARRIER, PAINT, VAPOR BARRIER, ARCHITECTURAL FOAM SHAPES, CAST IN PLACE CONCRETE, & DOORS.
3) CONTRACTOR IS TO SUBMIT SAMPLES OF ALL SELECTED PRODUCTS TO OWNER FOR APPROVAL.
4) CONTRACTOR IS TO CONTACT ARCHITECT IMMEDIATELY IF THERE ARE ANY DISCREPENCIES BETWEEN PLANS, SECTIONS, AND/OR DETAILS.
5) USE DURAROCK OR EQUAL AS UNDERLAYMENT FOR TILE OR BATHROOM FINISHES WHERE WATER SOURCE IS IN CLOSE PROXIMITY.

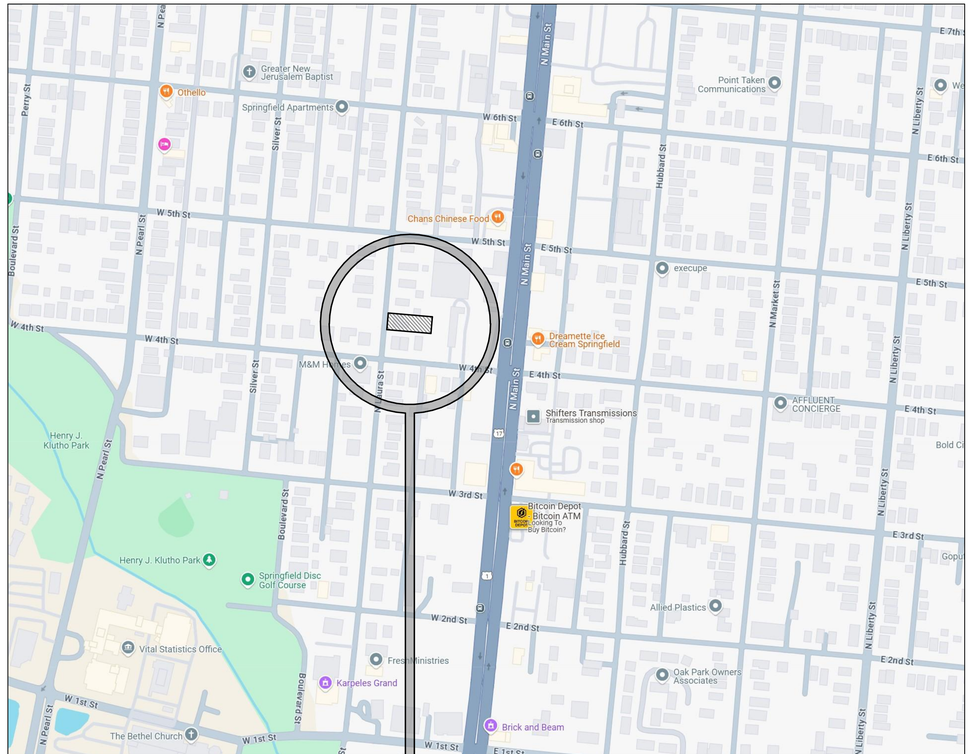

Blake Architecture & Design LLC
204 CALUMET DR - ST JOHNS, FL 32259
• Tel: 904.704.9439 • Email: blakearch@outlook.com •

LAURA ST RESIDENCE
SINGLE-FAMILY RENOVATION
PROJECT ID: 2025 02
1417 N LAURA ST - JACKSONVILLE, FL 32206

MICHAEL BLAKE
ARCHITECT, FL
AR 98432

STATE OF FLORIDA
MICHAEL BLAKE
AR98432
REGISTERED ARCHITECT

DESCRIPTION	DATE
PERMIT REVIEW	8.25.25

COVER SHEET

A300

1 SURVEY
SCALE: 1" = 10'

MAP SHOWING SITE PLAN OF:

THE NORTH 25.00 FEET OF LOT 2 TOGETHER WITH THE SOUTH 4.00 FEET OF LOT 3, BLOCK 18, SPRINGFIELD, AS RECORDED IN PLAT BOOK 2, PAGE 5 OF THE CURRENT PUBLIC RECORDS OF DUVAL COUNTY, FLORIDA

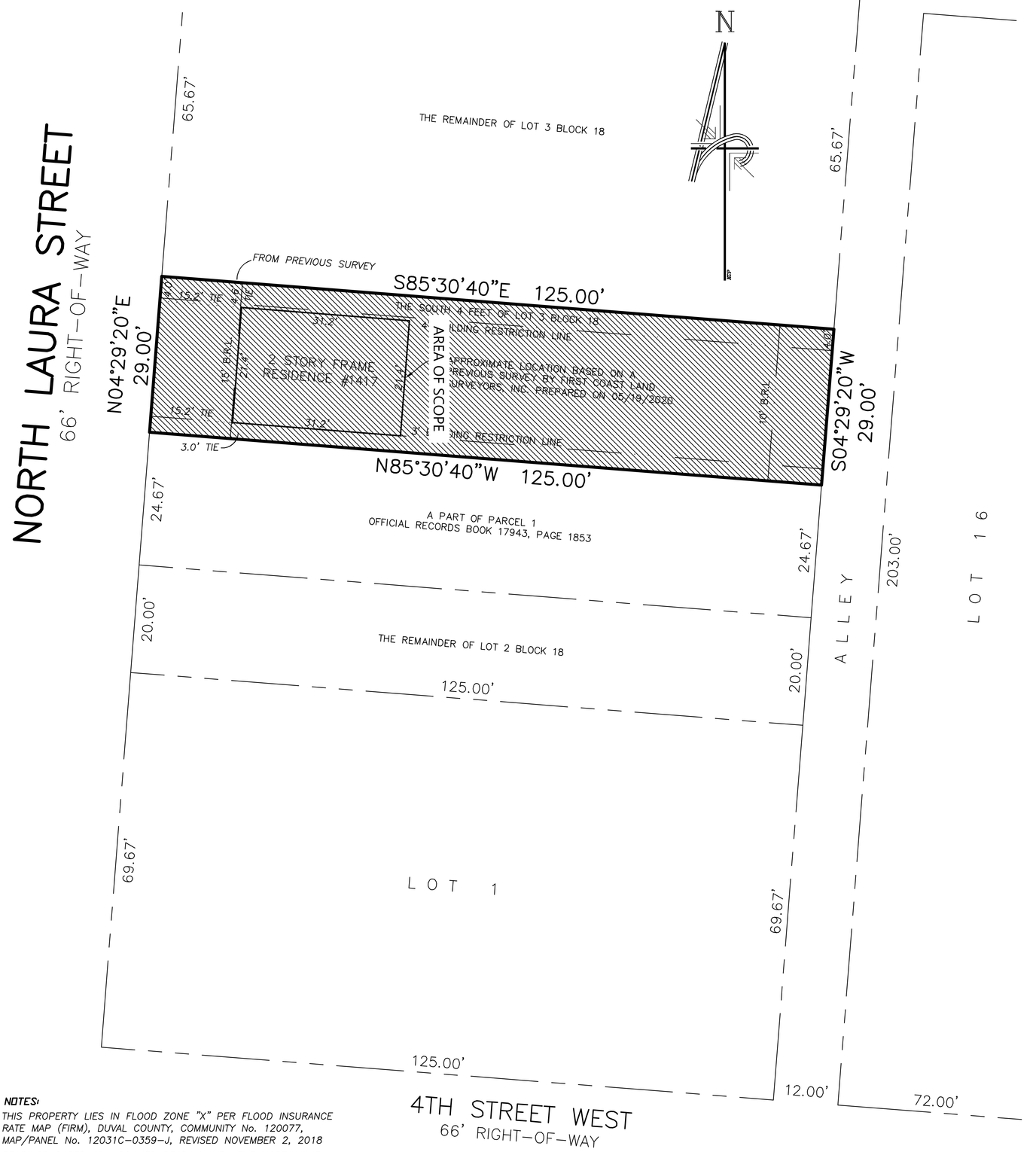

NOTES:

THIS PROPERTY LIES IN FLOOD ZONE "X" PER FLOOD INSURANCE RATE MAP (FIRM), DUVAL COUNTY, COMMUNITY No. 120077, MAP/PANEL No. 12031C-0359-J, REVISED NOVEMBER 2, 2018

BEARINGS BASED ON ASSUMED BEARING WITH THE NORTH LINE OF LOT 2 AS BEING S 85°30'40" E AS TAKEN FROM PREVIOUS SURVEY BY FIRST COAST LAND SURVEYORS, INC. ON 05/19/2020.

BUILDING RESTRICTION LINES (B.R.L.) PROVIDED BY CLIENT

ALL LOTS SHOWN HEREON LIE WITHIN BLOCK 18

THERE MAY BE ADDITIONAL RESTRICTIONS THAT ARE NOT SHOWN ON THIS SURVEY THAT MAY BE FOUND IN THE PUBLIC RECORDS OF DUVAL COUNTY, FLORIDA.

CERTIFIED TO:

KYMATA INVESTMENTS, LLC
RICH TRENDEL

DURDEN
SURVEYING AND MAPPING, INC.
985 11TH AVENUE SOUTH
JACKSONVILLE BEACH, FLORIDA 32250
(904) 853-6822 FAX(904) 853-6825
DURDENSURVEYING@GMAIL.COM
LICENSED BUSINESS NO. 6696

I hereby certify that this survey meets the standards of practice as set forth by the Florida Board of Land Surveyors, pursuant to Section 472.027 Florida Statutes and Chapter 5J17 Florida Administrative Code

FLORIDA REGISTERED SURVEYOR No. 4707
H. BRUCE DURDEN, Jr.

SURVEYOR'S NOTE:

THE SURVEY HEREON WAS MADE WITHOUT THE BENEFIT OF ABSTRACT OR SEARCH OF TITLE AND THEREFORE THE UNDERSIGNED AND DURDEN SURVEYING AND MAPPING, INC., MAKE NO CERTIFICATIONS REGARDING INFORMATION SHOWN OR NOT SHOWN HEREON PERTAINING TO EASEMENTS, CLAIMS OF EASEMENTS, RIGHTS-OF-WAY, SETBACK LINES, OVERLAPS, BOUNDARY LINE DISPUTES, AGREEMENTS, RESERVATIONS OR OTHER SIMILAR MATTERS WHICH MAY APPEAR IN THE ABSTRACT OR SEARCH OF TITLE. THIS SURVEY NOT VALID UNLESS THIS PRINT IS EMBOSSED WITH THE SEAL OF THE ABOVE SIGNED.

FIELD: AUGUST 23, 2024
CAD FILE NO. PTL-2 & 3, B-18.DWG
SCALE: 1" = 20'
WORK ORDER NUMBER: 24294

B-10490A

0 5 10 20

A301 SURVEY

DATE	DESCRIPTION
8.25.25	PERMIT REVIEW

STATE OF FLORIDA — MICHAEL BLAKE — AR98432

MICHAEL BLAKE
ARCHITECT, FL
AR 98432

LAURA ST RESIDENCE
SINGLE-FAMILY RENOVATION
PROJECT ID: 2025 02
1417 N LAURA ST - JACKSONVILLE, FL 32206

Blake Architecture & Design LLC
204 CALUMET DR - ST JOHNS, FL 32259
• Tel: 904.704.9430 • Email: blakearch@outlook.com •

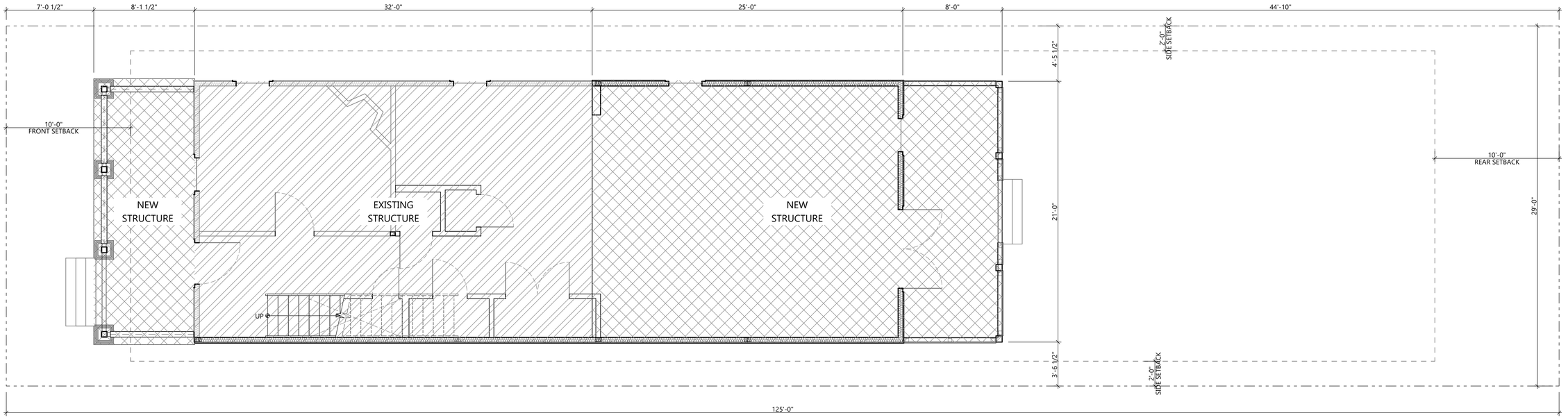

1 ARCHITECTURAL SITE PLAN

SCALE: 1/4" = 1'-0"

0 2' 4' 8'

Blake Architecture & Design LLC

204 CALUMET DR - ST JOHNS, FL 32259

• Tel: 904-704-9439 • Email: blakearch@outlook.com •

LAURA ST RESIDENCE
SINGLE-FAMILY RENOVATION

PROJECT ID: 2025 02

1417 N LAURA ST - JACKSONVILLE, FL 32206

MICHAEL BLAKE
ARCHITECT, FL
AR 98432

STATE OF FLORIDA
MICHAEL BLAKE
AR98432
REGISTERED ARCHITECT

DESCRIPTION	DATE
PERMIT REVIEW	8.25.25

ARCHITECTURAL SITE PLAN

A302

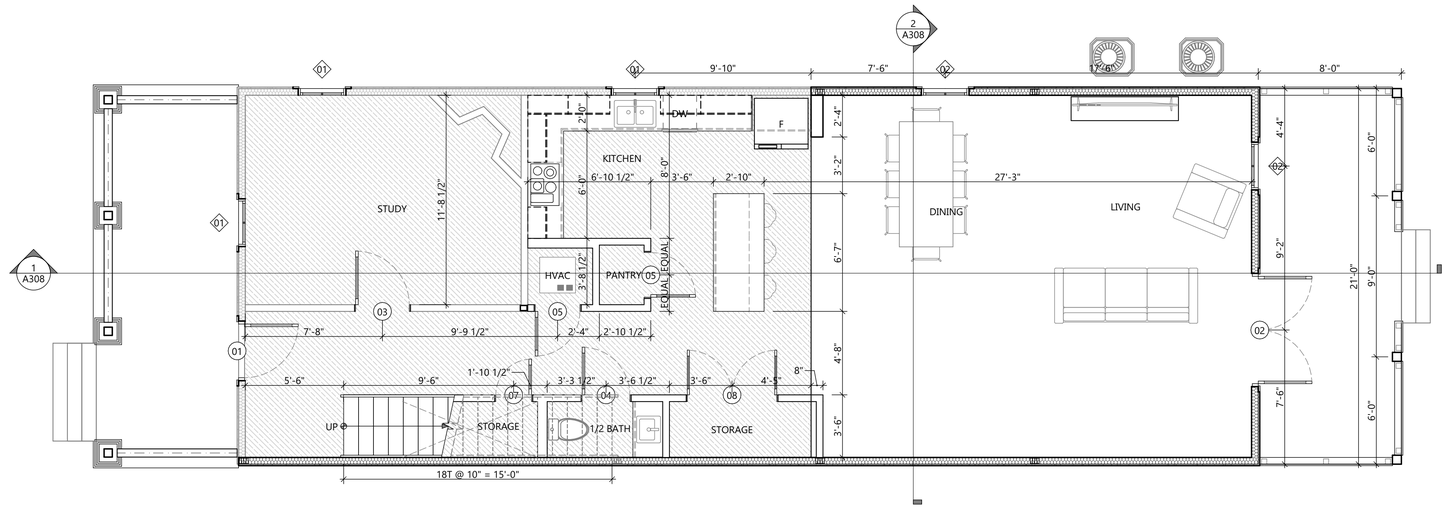

1 1ST FLOOR PLAN

SCALE: 1/4" = 1'-0"

0 2' 4' 8'

NOTES:
1) ALL GLAZING IN BATHROOM SHOWER AREA TO BE SAFETY GLAZING IN ACCORDANCE WITH FBC R308.
2) PROVIDE FIREBLOCKING AT LOCATIONS AND METHODS IN ACCORDANCE WITH FBC R302.11.
3) PROVIDE DRAFTSTOPPING AT LOCATIONS AND METHODS IN ACCORDANCE WITH FBC R302.12.

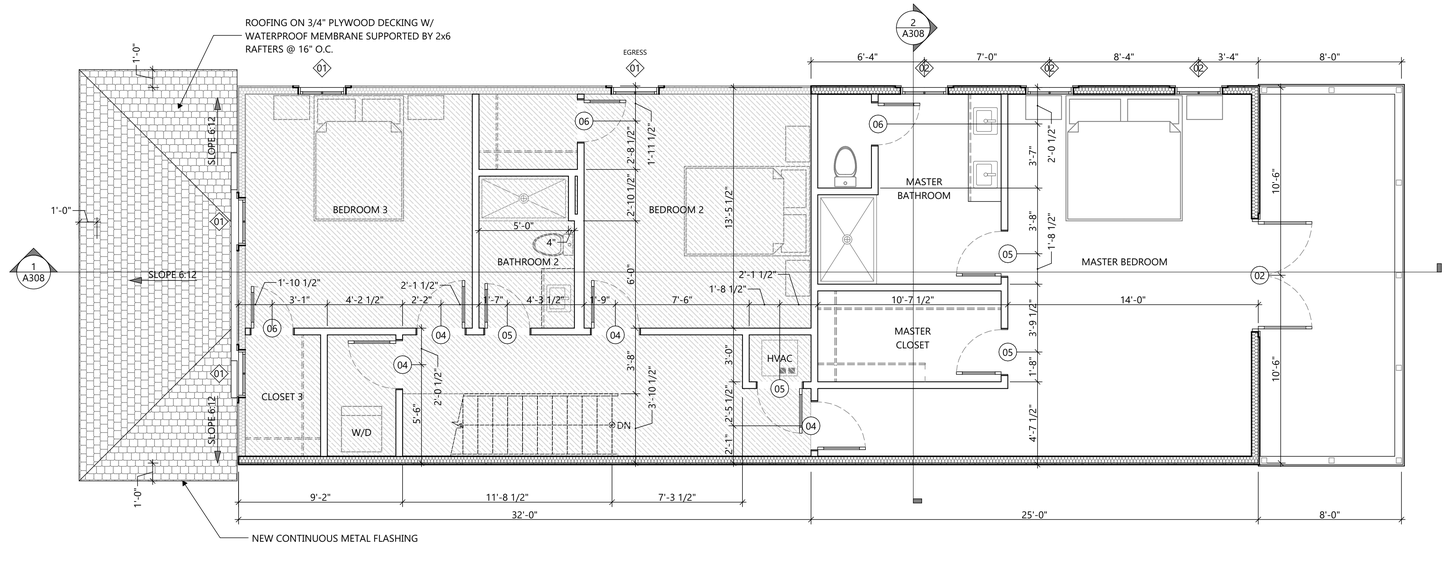

2 2ND FLOOR PLAN

SCALE: 1/4" = 1'-0"

0 2' 4' 8'

Blake Architecture & Design LLC
204 CALUMET DR - ST JOHNS, FL 32259
• Tel: 904.704.9439 • Email: blakearch@outlook.com •

LAURA ST RESIDENCE
SINGLE-FAMILY RENOVATION
PROJECT ID: 2025 02
1417 N LAURA ST - JACKSONVILLE, FL 32206

MICHAEL BLAKE
ARCHITECT, FL
AR 98432

STATE OF FLORIDA
MICHAEL BLAKE
AR98432
REGISTERED ARCHITECT

DESCRIPTION	DATE
PERMIT REVIEW	8.25.25

FLOOR PLANS

A303

ROOF VENTILATION		
ROOF AREA	REQUIRED VENT.	PROVIDED VENT.
1,397 SQFT	9.31 SQFT	.33x8 = 2.64 SQFT
		3.66x2 = 7.32 SQFT
		TOTAL = 9.96 SQFT

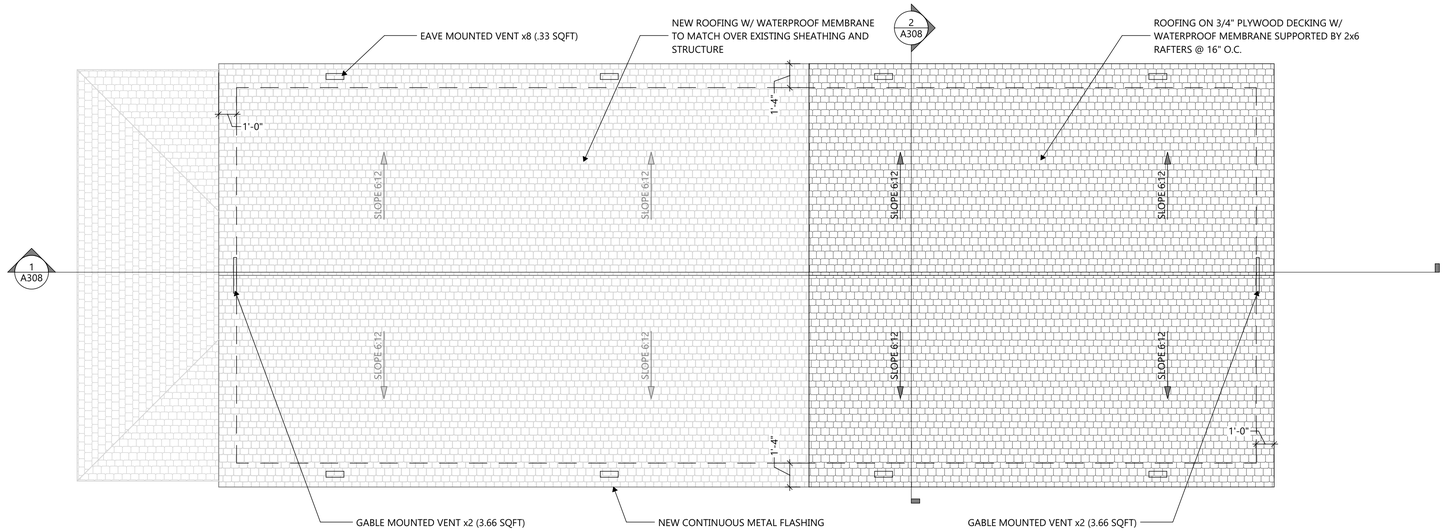

1 ROOF PLAN
SCALE: 1/4" = 1'-0"

0 2' 4' 8'

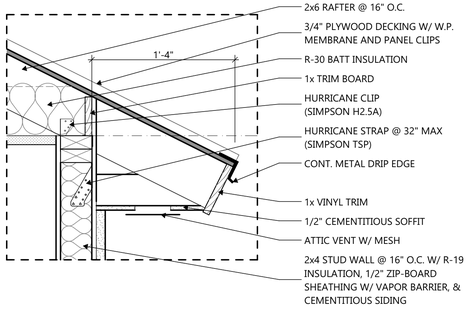

2 TYPICAL EAVE DETAIL
SCALE: 1 1/2"= 1'-0"

0 6" 12" 18"

Blake Architecture & Design LLC
204 CALUMET DR - ST JOHNS, FL 32259
• Tel: 904-704-9439 • Email: blakearch@outlook.com •

LAURA ST RESIDENCE
SINGLE-FAMILY RENOVATION
PROJECT ID: 2025 02
1417 N LAURA ST - JACKSONVILLE, FL 32206

MICHAEL BLAKE
ARCHITECT, FL
AR 98432

STATE OF FLORIDA
MICHAEL BLAKE
AR98432
REGISTERED ARCHITECT

DESCRIPTION	DATE
PERMIT REVIEW	8.25.25

ROOF PLAN & DETAILS

A304

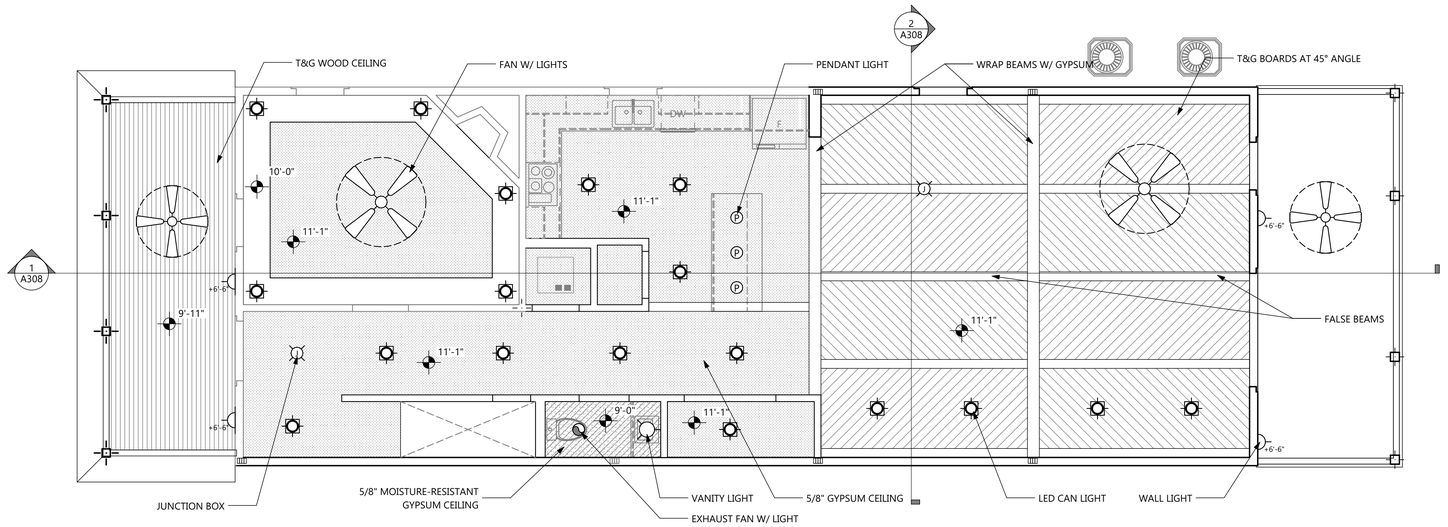

1 1ST FLOOR RCP
SCALE: 1/4" = 1'-0"

0 2' 4' 8'

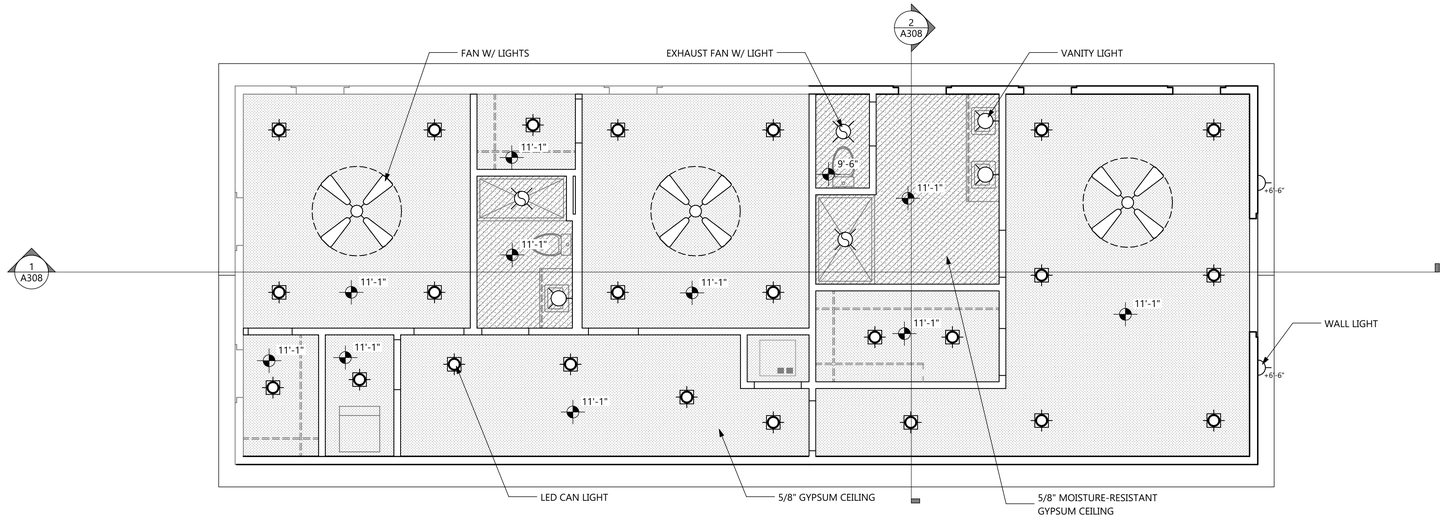

2 2ND FLOOR RCP
SCALE: 1/4" = 1'-0"

0 2' 4' 8'

Blake Architecture & Design LLC
204 CALUMET DR - ST JOHNS, FL 32259
• Tel: 904-704-9439 • Email: blakearch@outlook.com •

LAURA ST RESIDENCE
SINGLE-FAMILY RENOVATION
PROJECT ID: 2025 02
1417 N LAURA ST - JACKSONVILLE, FL 32206

MICHAEL BLAKE
ARCHITECT, FL
AR 98432

STATE OF FLORIDA
MICHAEL BLAKE
AR98432
REGISTERED ARCHITECT

DESCRIPTION	DATE
PERMIT REVIEW	8.25.25

RCP'S

A305

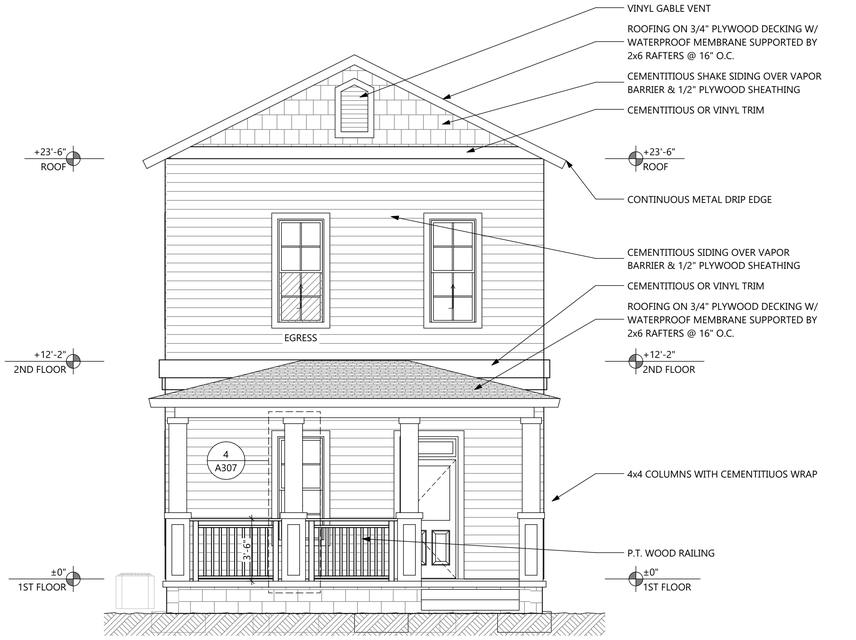

1 WEST ELEVATION
SCALE: 1/4" = 1'-0"

0 2' 4' 8'

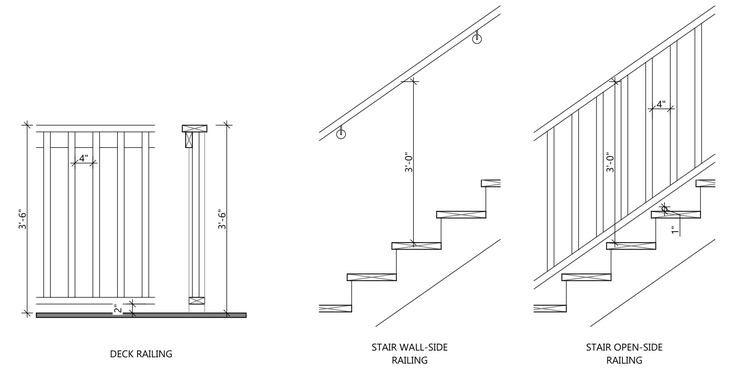

DECK RAILING

STAIR WALL-SIDE RAILING

STAIR OPEN-SIDE RAILING

3 RAILING DETAIL
SCALE: 3/4" = 1'-0"

0 1' 2' 3'

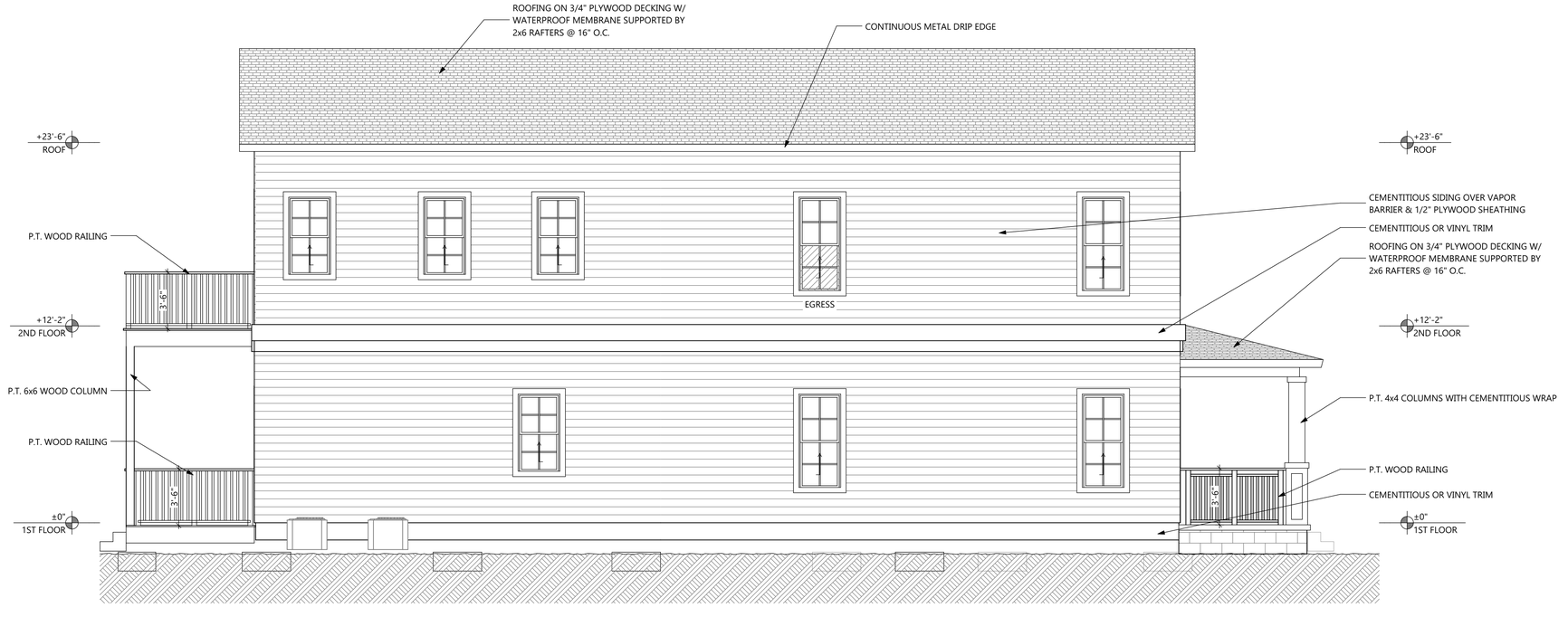

2 NORTH ELEVATION
SCALE: 1/4" = 1'-0"

0 2' 4' 8'

Blake Architecture & Design LLC
204 CALUMET DR - ST JOHNS, FL 32259
• Tel: 904-704-9439 • Email: blakearch@outlook.com •

LAURA ST RESIDENCE
SINGLE-FAMILY RENOVATION
PROJECT ID: 2025 02
1417 N LAURA ST - JACKSONVILLE, FL 32206

MICHAEL BLAKE
ARCHITECT, FL
AR 98432

STATE OF FLORIDA
MICHAEL BLAKE
AR98432
REGISTERED ARCHITECT

DESCRIPTION	DATE
PERMIT REVIEW	8.25.25

ELEVATIONS & DETAILS

A306

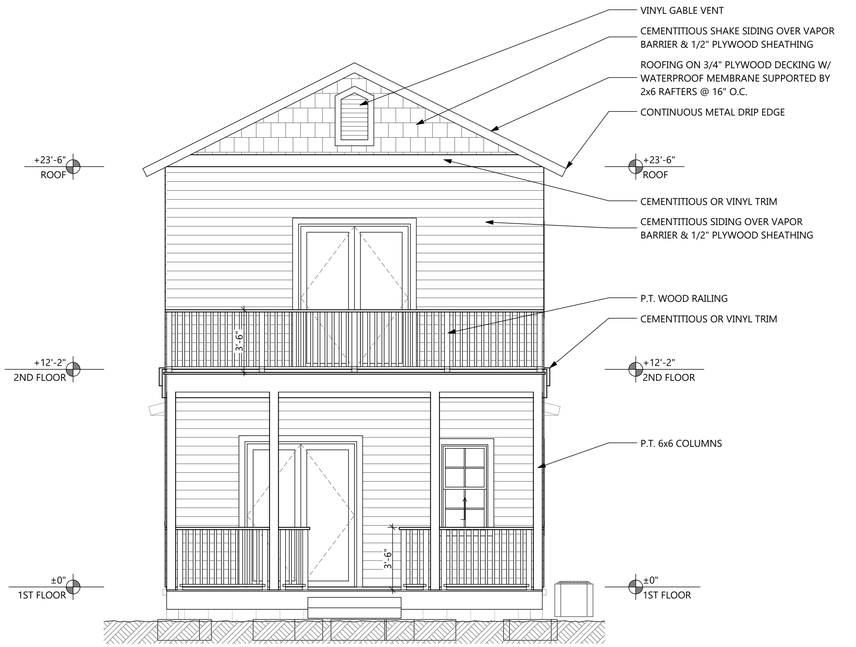

1 EAST ELEVATION
SCALE: 1/4" = 1'-0"

0 2' 4' 8'

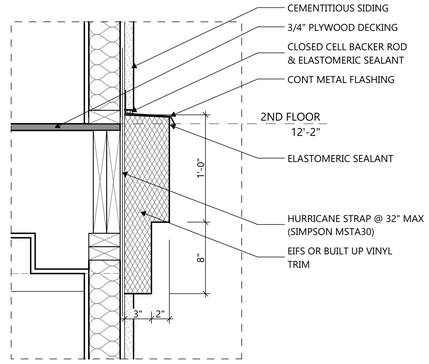

3 BAND FEATURE DETAIL
SCALE: 1 1/2"= 1'-0"

0 6" 12" 18"

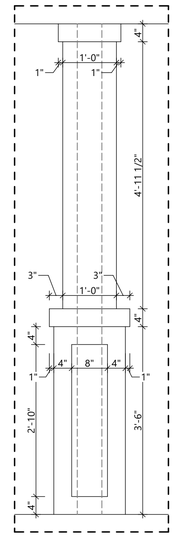

4 COLUMN DETAIL
SCALE: 3/4" 1'= 1'-0" 2' 3'

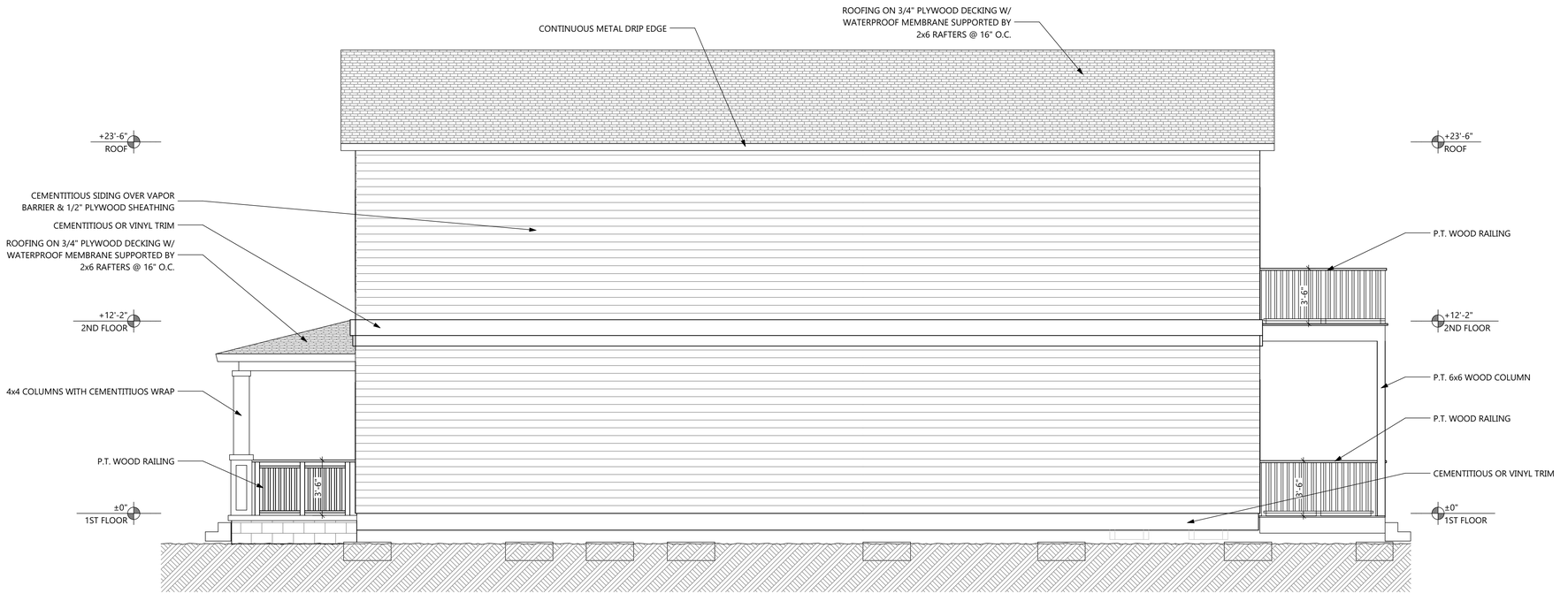

2 SOUTH ELEVATION
SCALE: 1/4" = 1'-0"

0 2' 4' 8'

Blake Architecture & Design LLC
204 CALUMET DR - ST JOHNS, FL 32259
• Tel: 904-704-9439 • Email: blakearch@outlook.com •

LAURA ST RESIDENCE
SINGLE-FAMILY RENOVATION
PROJECT ID: 2025 02
1417 N LAURA ST - JACKSONVILLE, FL 32206

MICHAEL BLAKE
ARCHITECT, FL
AR 98432

STATE OF FLORIDA
MICHAEL BLAKE
AR98432
REGISTERED ARCHITECT

DESCRIPTION	DATE
PERMIT REVIEW	8.25.25

ELEVATIONS & DETAILS

A307

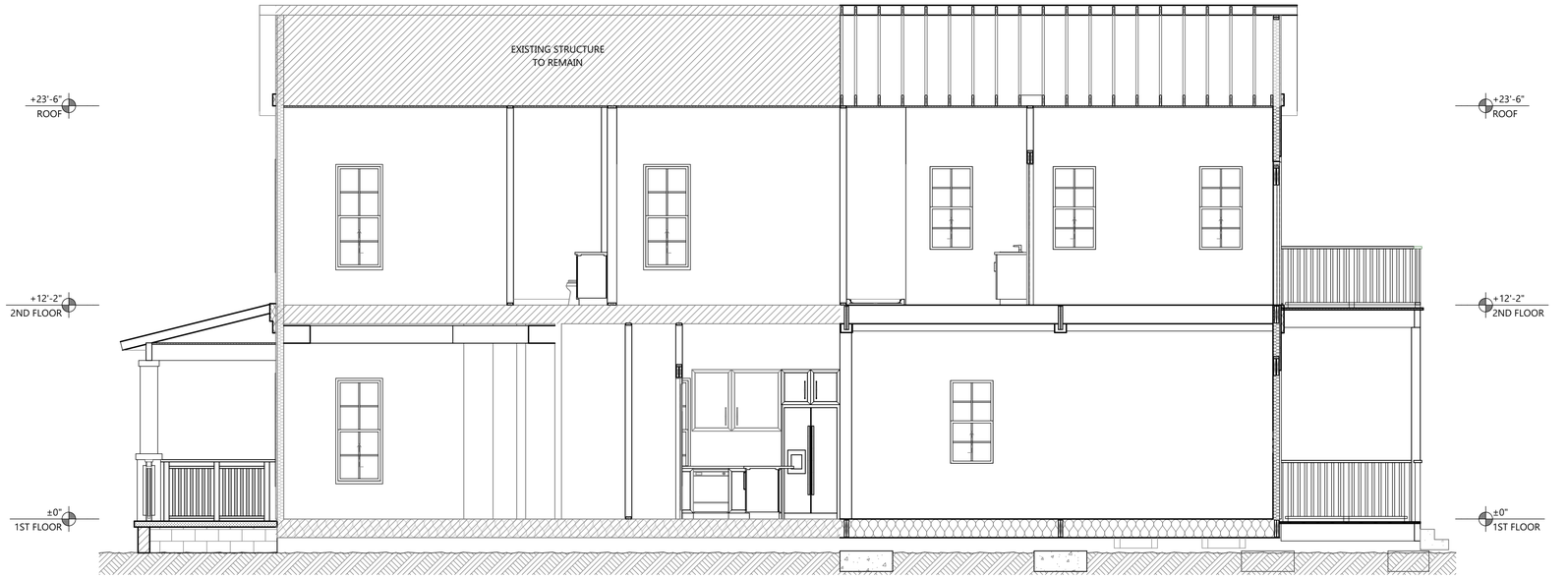

1 SECTION A
SCALE: 1/4" = 1'-0"

0 2' 4' 8'

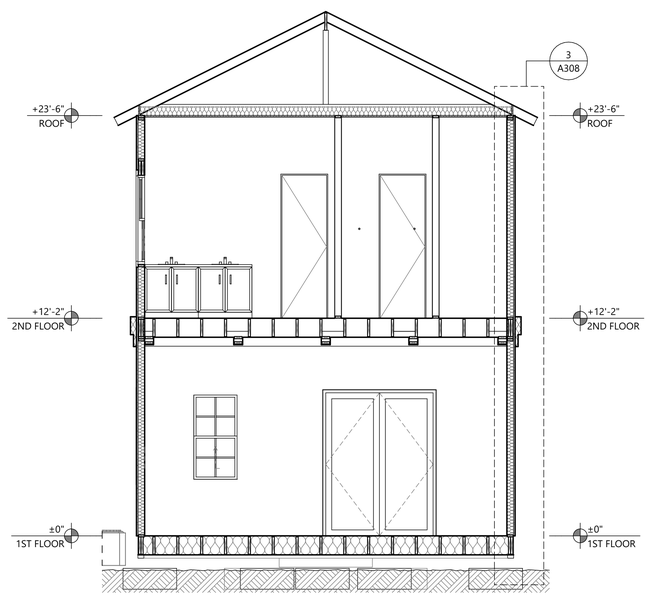

2 SECTION B
SCALE: 1/4" = 1'-0"

0 2' 4' 8'

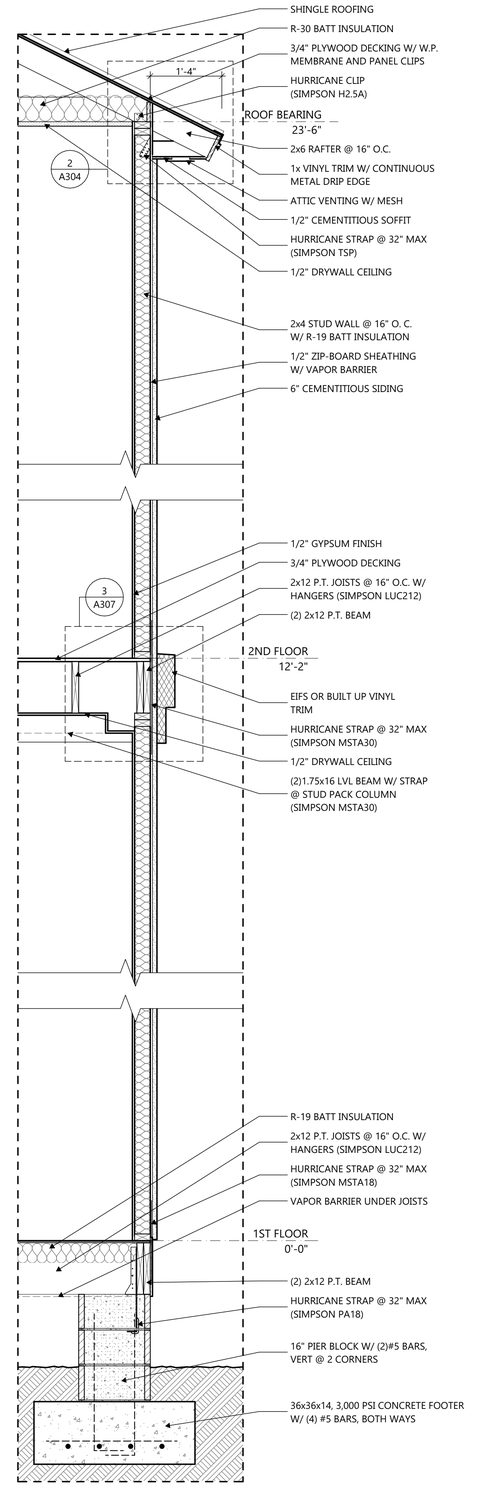

3 TYP. WALL SECTION
SCALE: 3/4" = 1'-0"

0 1' 2' 3'

Blake Architecture & Design LLC
204 CALUMET DR - ST JOHNS, FL 32259
• Tel: 904-704-9439 • Email: blakearch@outlook.com •

LAURA ST RESIDENCE
SINGLE-FAMILY RENOVATION
PROJECT ID: 2025 02
1417 N LAURA ST - JACKSONVILLE, FL 32206

MICHAEL BLAKE
ARCHITECT, FL
AR 98432

STATE OF FLORIDA
MICHAEL BLAKE
AR98432
REGISTERED ARCHITECT

DESCRIPTION	DATE
PERMIT REVIEW	8.25.25

SECTION & WALL SECTIONS

A308

371

DOOR ELEVATIONS								
ID	01	02	03	04	05	06	07	08
ELEVATION	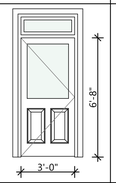	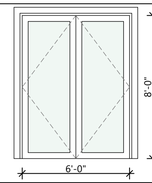	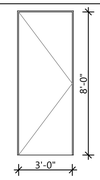	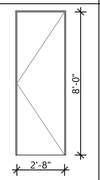	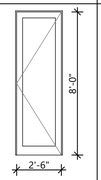	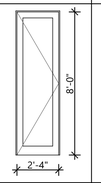	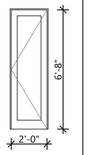	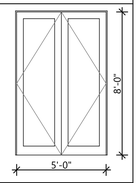
COUNT	1	2	1	5	6	3	1	1
NOTES	ENTRY DOOR W/ TRANSOM	EXTERIOR DBL GLASS SWINGING DOOR	INTERIOR 1-PANEL SWINGING DOOR	INTERIOR 1-PANEL SWINGING DOOR	INTERIOR 1-PANEL SWINGING DOOR	INTERIOR 1-PANEL SWINGING DOOR	INTERIOR 1-PANEL SWINGING DOOR	INTERIOR DOUBLE 1-PANEL SWINGING DOOR

WINDOW ELEVATIONS		
ID	01	02
ELEVATION	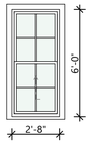	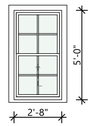
COUNT	7	5
NOTES	SINGLE HUNG W/ DECORATIVE GRID	SINGLE HUNG W/ DECORATIVE GRID

HURRICANE STRAPPING NOTE:
FOR DROP HEADER CONDITION USE SIMPSON MSTA24 STRAP FOR TOP PLATE TO CRIPPLE & SIMPSON LSTA18 FOR CRIPPLE TO HEADER

DOOR & WINDOW NOTES:
1) ALL DOORS TO BE SELECTED BY OWNER.
2) ALL DOORS TO BE INSTALLED IN STRICT ACCORDANCE W/ MANUFACTURER'S REQUIREMENTS.
3) ALL INTERIOR DOORS IN NON-LOAD BEARING WALLS TO HAVE DBL 2x4 HEADER & JAMBS.
4) ALL INTERIOR DOORS TO BE RESIDENTIAL GRADE, PRE-HUNG, WOOD FRAME DOORS.
5) ALL OPENINGS TO HAVE 6" MIN. OF PEEL & STICK WATERPROOFING AROUND EDGES.
6) FIELD VERIFY ALL OPENINGS.
7) GLAZING IN DOORS, WHETHER FIXED OR OPERABLE, SHALL BE TEMPERED.

HEADER SPAN TABLE		
OPENING	SILL PLATES	MIN FASTENER (EACH END)
0'-0" - 3'-6"	2-2x6 SYP #2	5-16D TOE NAILS
3'-7" - 4'-6"	2-2x8 SYP #2	5-16D TOE NAILS
4'-7" - 6'-0"	2-2x12 SYP #2	7-16D TOE NAILS
18'-0" GARAGE DOOR	2-1.75x14 OR 3-1.75x12 LVL	7-16D TOE NAILS

WINDOW SILL SCHEDULE		
OPENING	SILL PLATES	MIN FASTENER (EACH END)
0'-0" - 4'-4"	1-2x4 SYP #2	4-12D TOE NAILS
4'-5" - 6'-4"	2-2x4 SYP #2	4-12D TOE NAILS
6'-5" - 8'-4"	3-2x4 SYP #2	1-A35 + 3-12D TOE NAILS

KING & JACK STUD SCHEDULE		
OPENING	JACK	KING
0'-0" - 3'-6"	1	2
3'-7" - 8'-0"	1	2
8'-1" - 12'-0"	2	2
12'-1" - 18'-0"	3	2

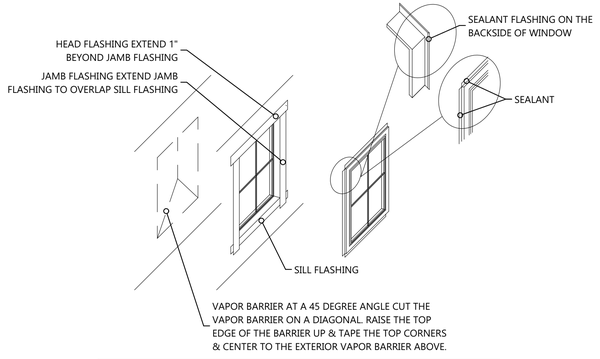

1) IN WATER SHEDDING FASHION, STARTING AT THE BASE OF THE WALL WORKING TOWARDS THE TOP, INSTALL THE VAPOR BARRIER TO THE FACE OF THE SHEATHING.
2) APPLY SILL FLASHING.
3) APPLY BEAD OF SEALANT AT BACK OF WINDOW FLANGE & SET WINDOW USING PAN HEAD SCREWS TO FACILITATE INSPECTION.
4) APPLY BEAD OF SEALANT AT SIDE JAMBS EXTEND 8 ½".
5) APPLY JAMB FLASHING.
6) APPLY BEAD OF SEALANTAT HEAD.
7) APPLY HEAD FLASHING.
8) REMOVE PREVIOUSLY APPLIED TAPE, ALLOWING VAPOR BARRIER TO LAY FLAT OVER HEAD FLASHING. APPLY NEW SHEATHING TAPE OVER DIAGONAL CUT.

1 TYP. FLASHING DETAIL
SCALE: 1/4" = 1'-0"

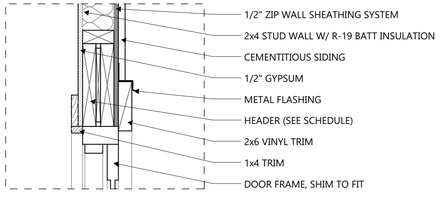

2 STUD - DOOR HEADER
SCALE: 1 1/2"= 1'-0"

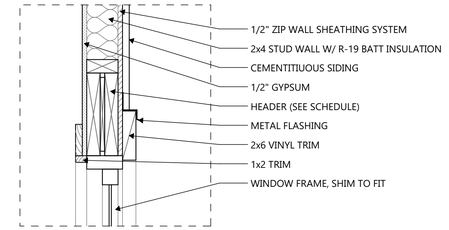

3 STUD - WINDOW HEADER
SCALE: 1 1/2"= 1'-0"

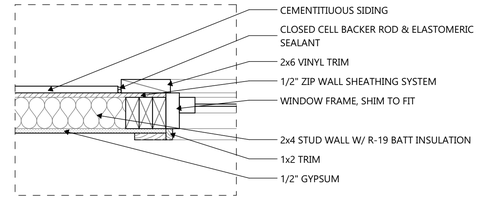

4 STUD - WINDOW JAMB
SCALE: 1 1/2"= 1'-0"

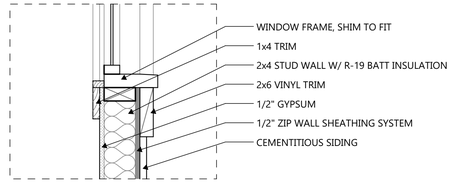

5 STUD - WINDOW SILL
SCALE: 1 1/2"= 1'-0"

Blake Architecture & Design LLC
204 CALUMET DR - ST JOHNS, FL 32259
• Tel: 904-704-9430 • Email: blakearch@outlook.com •

LAURA ST RESIDENCE
SINGLE-FAMILY RENOVATION
PROJECT ID: 2025 02
1417 N LAURA ST - JACKSONVILLE, FL 32206

MICHAEL BLAKE
ARCHITECT, FL
AR 98432

STATE OF FLORIDA · MICHAEL BLAKE · AR98432 · REGISTERED ARCHITECT

DESCRIPTION	DATE
PERMIT REVIEW	8.25.25

DOORS & WNDOWS

A309

FOUNDATION NOTES:

1) EARTH & EARTH FILL SUPPORTING SLABS ON GRADE IS ASSUMED TO HAVE A MIN. BEARING CAPACITY OF 2,000 PSF IN ACCORDANCE W/ FBCR TABLE R401.4.1 & SHALL BE FREE OF ORGANIC MATERIAL & COHESIVE SOILS. COMPACT THE FILL IN 12" LIFTS TO AT LEAST 95% OF MODIFIED PROCTOR MAXIMUM DRY DENSITY. IT IS THE OWNER'S OR CONTRACTOR'S RESPONSIBILITY TO CONFIRM THESE ASSUMPTIONS.
2) IF CONTRACTOR OR BUILDING OFFICIAL DETERMINES THAT THE SOIL IS NOT SUITABLE FOR 2,000 PSF BEARING CAPACITY, CONTACT E.O.R AS ADDITIONAL FOUNDATION WORK MAY BE REQUIRED.
3) ALL CONCRETE WORK SHALL BE IN ACCORDANCE W/ ACI 318-11 & ACI 301.
4) ALL CEMENT SHALL CONFORM TO ASTM C150.
5) ALL AGGREGATE SHALL CONFORM TO ASTM C33.
6) ALL REINFORCING STEEL SHALL BE ASTM A615 GRADE 40 AND SHALL CONFORM TO ACI 315.
7) WATER SHALL BE CLEAN AND FREE OF INJURIOUS AMOUNTS OF OIL, ACIDS, ALKALIS, SALTS, ORGANIC MATTER OF OTHER SUBSTANCES THAT ARE DELETERIOUS TO CONCRETE OR STEEL REINFORCEMENT.
8) FOOTINGS MAY BEAR UPON UNDISTRUBED SOIL OR STRUCTURAL FILL. FILL SHALL BE COMPACTED TO A DENSITY OF AT LEAST 95% OF THE MODIFIED PROCTOR MAXIMUM (ASTM D1557) FOR A DEPTH OF AT LEAST 2'-0" BELOW BOTTOM OF FOOTING.
9) MINIMUM CONCRETE COVERING FOR REINFORCEMENT SHALL BE:
3" - CONCRETE CAST AGAINST & PERMANENTELY EXPOSED TO EARTH
2" - CONCRETE EXPOSED TO EARTH OR WEATHER
1 1/2"- CONCRETE NOT EXPOSED TO EARTH OR WEATHER
10) ALL CONTINUOUS REINFORCING STEEL SHALL BE LAP-SPLICED W/ THE FOLLOWING MIN LENGTHS:
#4 BARS - 21" MIN
#5 BARS - 26" MIN
#6 BARS - 32" MIN
11) REINFORCEMENT IN FOOTINGS SHALL BE BENT AROUND CORNERS OR SHALL USE CORNER BARS.
12) 24" LONG, #4 BAR IS RECOMMENDED TO BE INSTALLED AT ALL RE-ENTRANT CORNERS.

WOOD FRAMING NOTES:

1) ALL WOOD TO BE SPF #2.
2) ALL WOOD FRAMING HAS BEEN DESIGNED IN ACCORDANCE WITH "NATIONAL DESIGN SPECIFICATION (NDS) FOR WOOD CONSTRUCTION," 2012 EDITION.
3) SOUTHERN YELLOW PINE MEMBER DESIGN INCORPORATES DESIGN VALUES FOR ALL SIZES AND GRADES OF VISUALLY GRADED SOUTHERN YELLOW PINE DIMENSION LUMBER PER "SUPPLEMENT NO. 13 TO THE 2002 STANDARD GRADING RULES FOR SOUTHERN PINE LUMBER," PUBLISHED BY THE SOUTHERN PINE INSPECTION BUREAU (SPIB).
4) ALL WOOD MEMBERS EXPOSED TO WEATHER OR IN CONTACT WITH MASONRY, CONCRETE OR SOIL SHALL BE TREATED WITH AN APPROPRIATE PRESERVATIVE SUITABLE FOR THE EXPOSURE CONDITIONS.
5) IF ACQ TREATMENT IS USED ON ANY WOOD MEMBER, THEN ALL NAILING SHALL REQUIRE HOT-DIPPED GALVANIZED NAILS MEETING ASTM A153, CLASS C, OR ASTM B695, CLASS 50. IF BORATE TREATMENT IS USED THEN GALVANIZING IS NOT REQUIRED.
6) PREFABRICATED WOOD TRUSSES SHALL COMPLY WITH NDS AND "NATIONAL DESIGN STANDARD FOR METAL PLATE CONNECTED WOOD TRUSS CONSTRUCTION (TPI 1-07)."
7) ALL TRUSSES SHALL BE DESIGNED BY THE TRUSS MANUFACTURER'S REGISTERED ENGINEER.
8) THE TRUSS MANUFACTURER SHALL SUBMIT SHOP DRAWINGS AND DESIGN NOTES WITH A REGISTERED ENGINEER'S SEAL FOR APPROVAL. DESIGN NOTES SHALL INCLUDE THE RATED LOAD CAPACITY OF THE TRUSS TO TRUSS CONNECTORS, AND THE MANUFACTURER'S LICENSE TO FABRICATE TRUSSES UTILIZING THE CONNECTOR SYSTEM PROPOSED. THE CONTRACTOR SHALL APPROVE FABRICATION AND INSTALLATION DRAWINGS SHOWING SIZE, SHAPE AND LAYOUT.
9) JOBSITE HANDLING AND ERECTION, INCLUDING TEMPORARY BRACING, DURING INSTALLATION OF TRUSSES SHALL COMPLY WITH TPI WTCA BCSI 1.
10) ALL PREFABRICATED WOOD TRUSSES SUBJECTED TO UPLIFT CONDITIONS SHALL BE SECURELY FASTENED TO THEIR SUPPORTING WALLS OR BEAMS WITH METAL CONNECTORS AS NOTED IN THE TRUSS CONNECTION SCHEDULE.
11) ALL GABLE ENDS SHALL BE BALLOON FRAMED OR BRACED IN ACCORDANCE WITH THE APPLICABLE DETAIL AS SHOWN IN THE DRAWINGS.
12) ROOF AND WALL SHEATHING NAILING PATTERNS TO BE 8D COMMON NAILS @ 6" ON THE EDGE AND 12" IN THE FIELD. SHEAR WALL SHEATHING SHALL BE 8D COMMON NAILS @ 3" O.C. ON THE EDGE AND 6" IN THE FIELD. STUCCO & OTHER EXTERIOR FINISHES SHALL BE INSTALLED PER MFG RECOMMENDATIONS AND PRODUCT APROVAL NUMBER.
13) SHEATH WALLS CONTINUOUS TO 2ND FLOOR TOP PLATE PER TYPICAL WALL SECTIONS.
14) PLANK-ORIENTED HEADER NOTES:
A) FASTEN PLANK ORIENTED HEADER TO JACK/KING GROUP W/ A35, EACH SIDE OF OPENING.
B) FASTEN PLANK ORIENTED HEADER TO JACK/KING GROUP W/ HORIZONTAL HTS16 STRAP, EACH SIDE OF OPENING.
15) ENGINEERED LUMBER (LVL, PARALLAM OR LSL) SHALL MEET THE FOLLOWING MINIMUM MATERIAL SPECIFICATIONS:

LVL OR PARALLAM	LSL
E=2,000,000 PSI	E=1,550,000 PSI
FB=2,600 PSI	FB=2,325 PSI
FC =750 PSI	FC =900 PSI
FV=285 PSI	FV=310 PSI

16) FASTEN PLIES OF 1 3/4" WIDE ENGINEERED LUMBER ACCORDING TO 1/S001.
17) OVERFRAMING NOTES:
A) ALL RAFTERS TO BE MIN 2x6, #2 SYP @ 24" O.C. MAX
B) ALL SLEEPERS TO BE PLANK-ORIENTED 2x8, #2 SYP MIN.
C) FASTEN SLEEPERS TO EACH TRUSS/RAFTER W/ 3-16d COMMONS MIN.
D) EACH RAFTER TO SLEEPER W/ SIMPSON H3 UPLIFT CONNECTOR
E) ALL RIDGE BOARDS TO BE 2x8, #2 SYP MIN.
F) FASTEN 2x6, #2 SYP COLLAR TIES FROM RAFTER TO RAFTER WHERE APPLICABLE W/ 5-10d COMMONS MIN.
18) DRAFT STOPPING AT FLOOR TRUSSES TO BE PROVIDED BY BUILDER IN ACCORDANCE W/ FBCR 302.12.

DESIGN CRITERIA	
WIND SPEED	125 MPH (NON IMPACT)
EXPOSURE CATEGORY	B - ENCLOSED
BLDG RISK CATEGORY	II

COMPONENTS & CLADDING DESIGN PRESSURES

TRIBUTARY AREA (SF)	INTERIOR ZONE (PSF)	EDGE STRIP (PSF) 'a' = 3'-0"	TYPICAL +
10	-18.3	-22.6	+16.9
50	-16.5	-19.0	+16.0
100	-16.0	-17.5	+16.0

COMPONENTS & CLADDING WALL ELEMENTS SHALL BE DESIGNED FOR BOTH POSITIVE AND NEGATIVE PRESSURES SHOWN IN TABLE ABOVE. (ALLOWABLE STRESS DESIGN)

•LINEAR INTERPOLATION IS PERMISSABLE.
•PLUS = PRESSURE AND MINUS = SUCTION.
•THE DISTANCE 'a' FROM OUTSIDE CORNERS OF BUILDING SHALL BE DESIGNED FOR EDGE STRIP PRESSURES.
•DESIGN OF WINDOWS/DOORS FASTENING TO THE WALL FRAMING IS THE RESPONSIBILITY OF THE WINDOW/DOOR MANUF./SUPPLIER & SHALL MEET THE ABOVE NOTED PRESURES.

RAFTER SPAN SCHEDULE				
O.C. SPACING	LUMBER SIZE			
	2x6	2x8	2x10	2x12
12"	14'-5"	18'-3"	21'-8"	25'-6"
16"	12'-6"	15'-10"	18'-9"	22'-1"
24"	10'-2"	12'-11"	15'-4"	18'-0"
20 L.L. / 15 D.L. , #2 SYP				

CEILING JOIST SPAN SCHEDULE				
O.C. SPACING	LUMBER SIZE			
	2x6	2x8	2x10	2x12
12"	11'-10"	18'-8"	24'-7"	26'-0"
16"	10'-9"	16'-11"	21'-7"	25'-7"
24"	9'-3"	13'-11"	17'-7"	20'-11"
10 L.L. / 5 D.L. , #2 SYP				

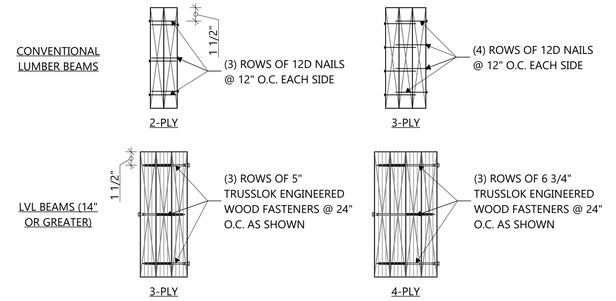

NOTES:
1) TYP. CONNECTION AT STUD COLUMNS, JACK-TO-KING ASSEMBLIES, CORNER POST, ETC.
2) SPECIFIED NAILING PATTERN REQUIRED FOR EVERY PLY IN ADDITION TO (2) PLYS.

1 MULTI-PLY FASTENING
SCALE: 1 1/2"= 1'-0"

0 6" 12" 18"

Blake Architecture & Design LLC
204 CALUMET DR - ST JOHNS, FL 32259
• Tel: 904-704-9430 • Email: blakearch@outlook.com •

LAURA ST RESIDENCE
SINGLE-FAMILY RENOVATION
PROJECT ID: 2025 02
1417 N LAURA ST - JACKSONVILLE, FL 32206

MICHAEL BLAKE
ARCHITECT, FL
AR 98432

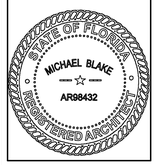

DESCRIPTION	DATE
PERMIT REVIEW	8.25.25

STRUCTURAL NOTES

S1

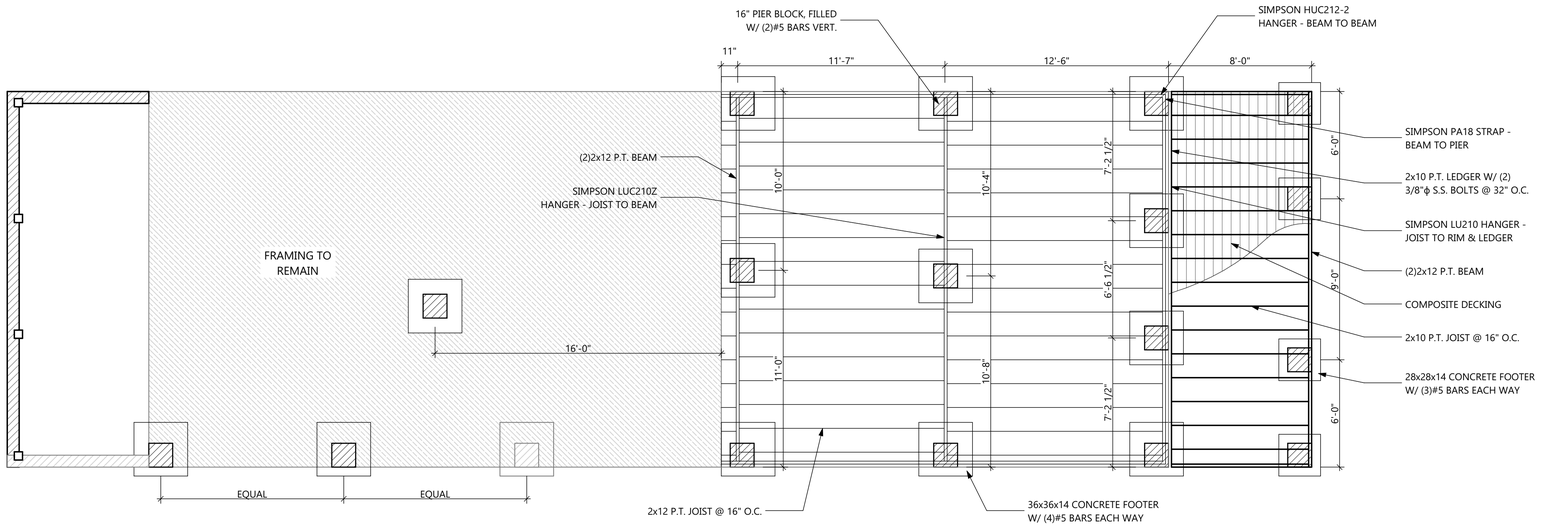

1 FOUNDATION PLAN

SCALE: 1/4" = 1'-0"

0 2' 4' 8'

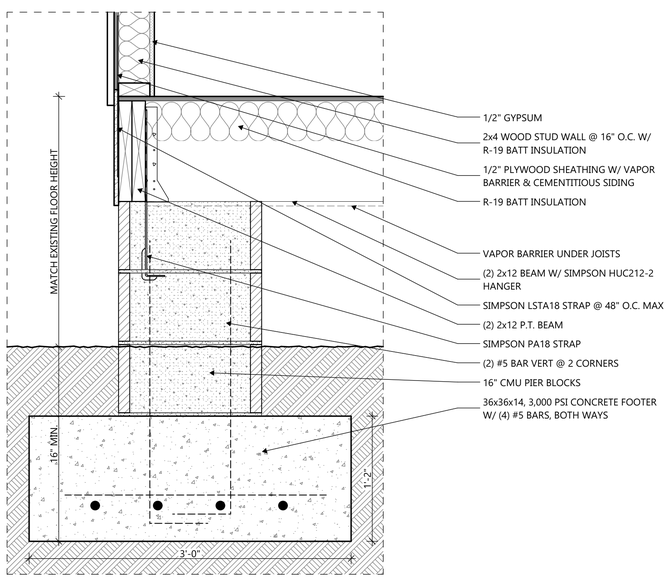

2 TYP. PIER DETAIL

SCALE: 1 1/2"= 1'-0"

0 6" 12" 18"

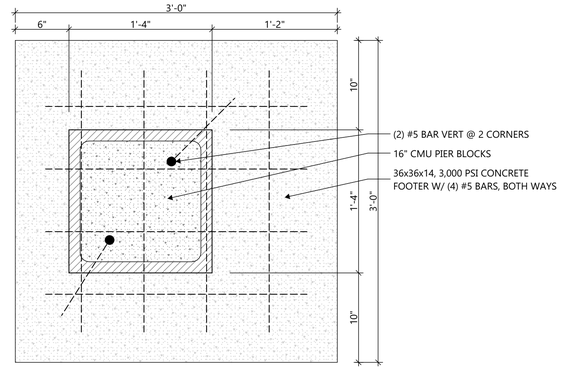

OFFSET PIER - LARGE

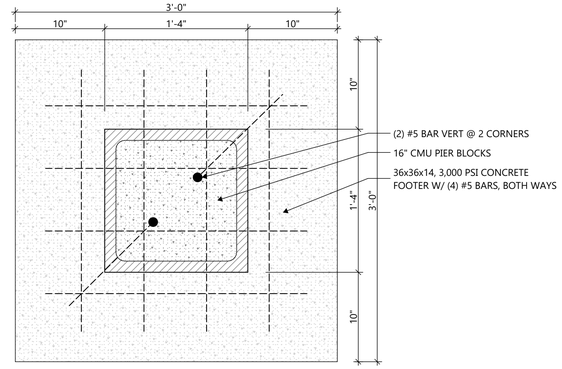

CENTER PIER - LARGE

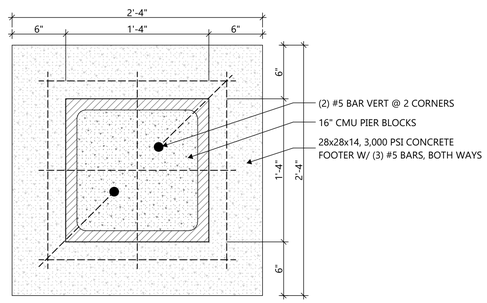

CENTER PIER - SMALL

3 FOOTER PLANS

SCALE: 1 1/2"= 1'-0"

0 6" 12" 18"

Blake Architecture & Design LLC
204 CALUMET DR - ST JOHNS, FL 32259
• Tel: 904-704-9430 • Email: blakearch@outlook.com •

LAURA ST RESIDENCE
SINGLE-FAMILY RENOVATION
PROJECT ID: 2025 02
1417 N LAURA ST - JACKSONVILLE, FL 32206

MICHAEL BLAKE
ARCHITECT, FL
AR 98432

STATE OF FLORIDA
MICHAEL BLAKE
AR98432
REGISTERED ARCHITECT

DESCRIPTION	DATE
PERMIT REVIEW	8.25.25

FOUNDATION PLAN & DETAILS

S2

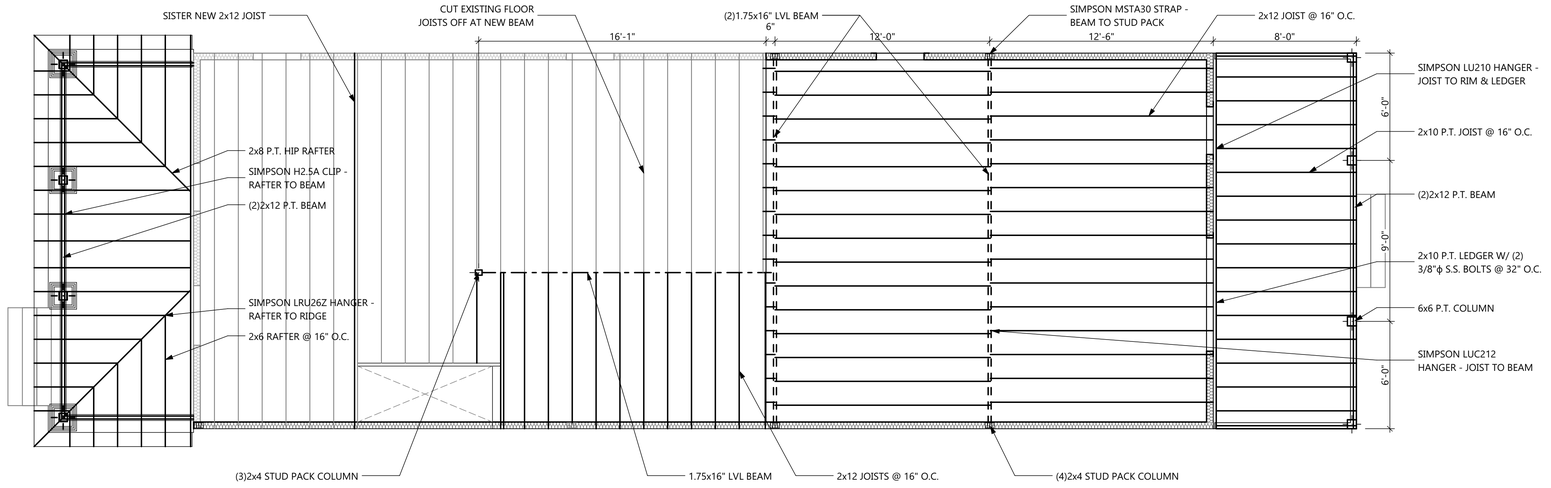

1 2ND FLOOR FRAMING

SCALE: 1/4" = 1'-0"

0 2' 4' 8'

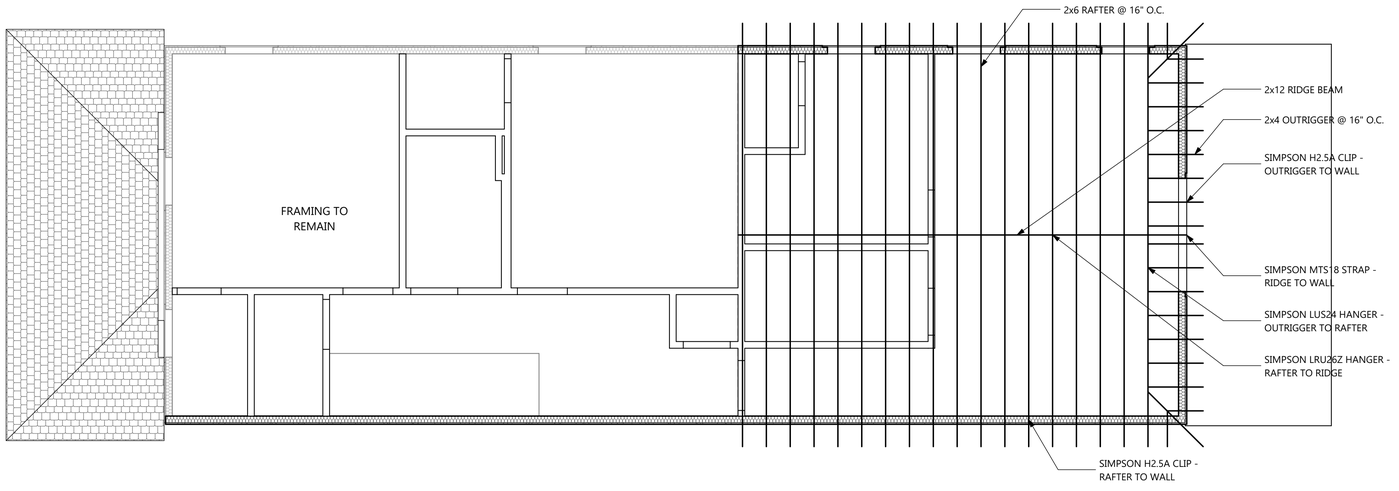

2 ROOF FRAMING

SCALE: 1/4" = 1'-0"

0 2' 4' 8'

Blake Architecture & Design LLC
204 CALUMET DR - ST JOHNS, FL 32259
• Tel: 904-704-9439 • Email: blakearch@outlook.com •

LAURA ST RESIDENCE
SINGLE-FAMILY RENOVATION
PROJECT ID: 2025 02
1417 N LAURA ST - JACKSONVILLE, FL 32206

MICHAEL BLAKE
ARCHITECT, FL
AR 98432

STATE OF FLORIDA
MICHAEL BLAKE
AR98432
REGISTERED ARCHITECT

DESCRIPTION	DATE
PERMIT REVIEW	8.25.25

FRAMING PLANS

S3

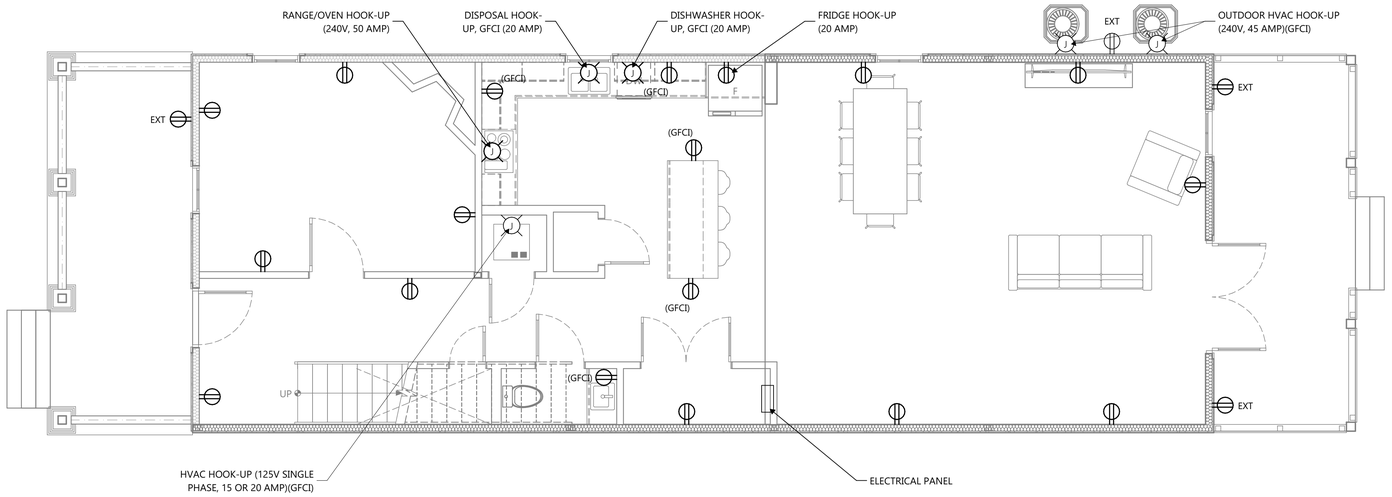

1 1ST FLOOR POWER
SCALE: 1/4" = 1'-0"

0 2' 4' 8'

POWER NOTES:
1) ELECTRICAL SUB-CONTRACTOR TO PROVIDE CALCS, DIAGRAMS, AND SCHEDULES AS REQUIRED BY FBC 2024.
2) ALL 120V, SINGLE PHASE 15 & 20 AMP CIRCUITS SHALL BE AFCI PROTECTED PER CODE.
3) INSTALL ALL OUTLETS IN ACCORDANCE W/ E3901, E3902.2, & E4002

ELECTRICAL LEGEND

SYMBOL	DESCRIPTION
	DUPLEX OUTLET
EXT	EXTERIOR GFCI PROTECTED DUPLEX OUTLET
(GFCI)	GFCI PROTECTED DUPLEX OUTLET
J	JUNCTION BOX FOR VARIOUS CONNECTIONS
	CABLE OUTLET

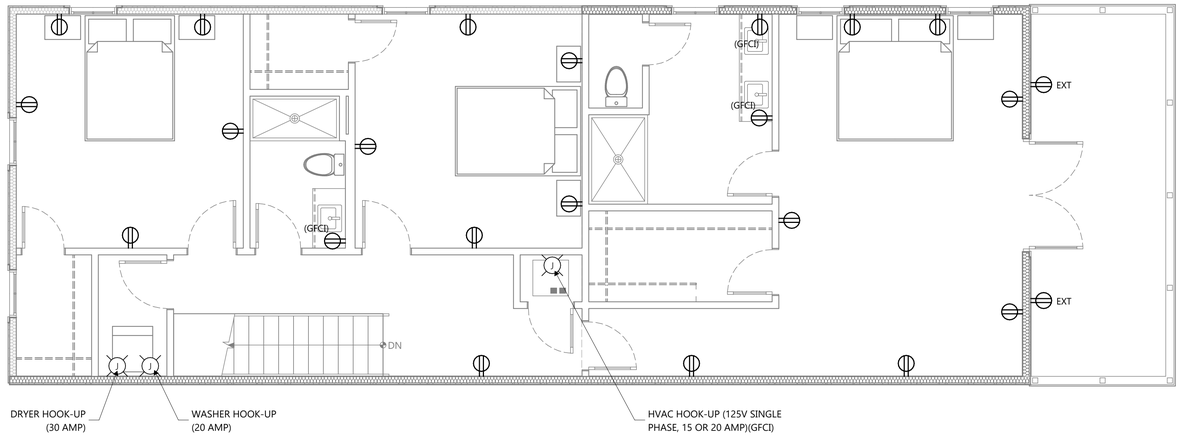

2 2ND FLOOR POWER
SCALE: 1/4" = 1'-0"

0 2' 4' 8'

Blake Architecture & Design LLC
204 CALUMET DR - ST JOHNS, FL 32259
• Tel: 904-704-9439 • Email: blakearch@outlook.com •

LAURA ST RESIDENCE
SINGLE-FAMILY RENOVATION
PROJECT ID: 2025 02
1417 N LAURA ST - JACKSONVILLE, FL 32206

MICHAEL BLAKE
ARCHITECT, FL
AR 98432

STATE OF FLORIDA
MICHAEL BLAKE
AR98432
REGISTERED ARCHITECT

DESCRIPTION	DATE
PERMIT REVIEW	8.25.25

POWER PLANS

E1

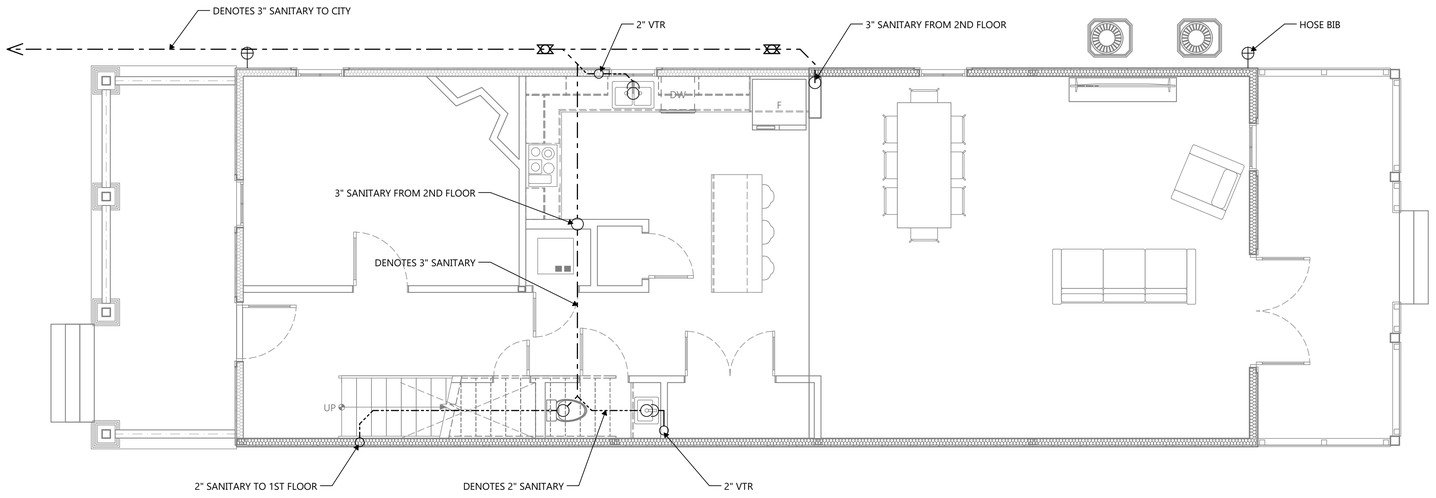

1 1ST FLOOR PLUMBING
SCALE: 1/4" = 1'-0"

0 2' 4' 8'

PLUMBING PIPE SIZING	
VENT	2"
LAVATORY	1 1/2"
SHOWER/TUB	2"
TOILET	3"
MAIN TRUNK	4"
HORIZ. RUNS TO BE MIN. 2" DIA.	

PLUMBING NOTES:
1) PLUMBING SUB-CONTRACTOR TO PROVIDE CALCS, SIZING, AND DRAWINGS AS REQUIRED BY FBC 2020.
2) VERIFY LOCATION OF SANITARY FOR CONNECTION.
3) COORDINATE TRENCHES W/ PLUMBING CONTRACTOR FOR FINAL PLUMBING RUNS.
4) INSTALL ALL PLUMBING FIXTURES TO MEET FLORIDA PLUMBING CODE.
5) FINAL LOCATION FOR SANITARY CONNECTION TO DETERMINED WITH SEPTIC PERMIT.

PLUMBING LEGEND	
SYMBOL	DESCRIPTION
	LAVATORY CONNECTION
	FLOOR DRAIN
	2" VENT
	2" STUDOR VENT
	TANKLESS WATER HEATER (GAS OR ELEC)
	WATER SOFTENER
	HOSE BIB
	CLEAN-OUT
	DENOTES 3" SANITARY LINE
	DENOTES 2" SANITARY LINE
	DENOTES 1 1/2" SANITARY LINE

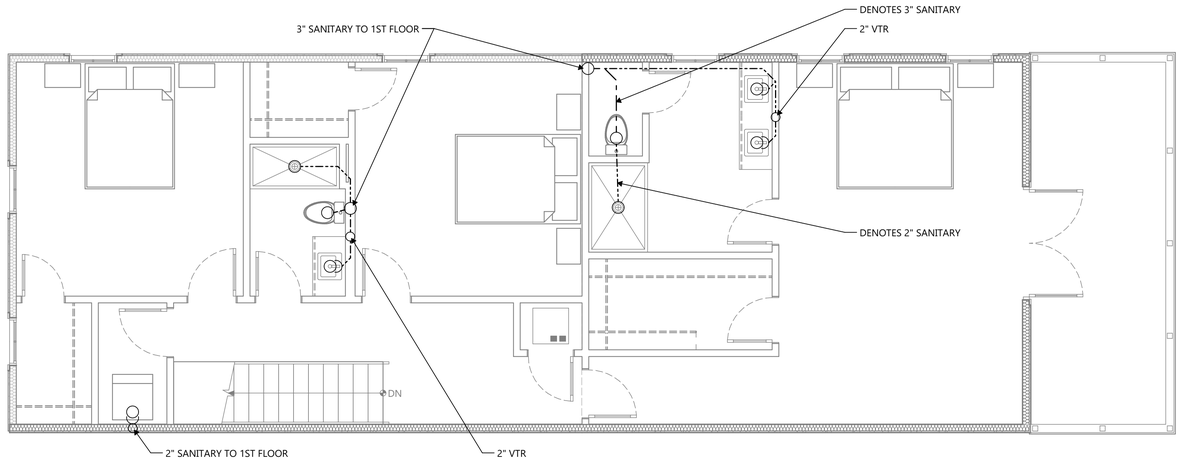

2 2ND FLOOR PLUMBING
SCALE: 1/4" = 1'-0"

0 2' 4' 8'

Blake Architecture & Design LLC
204 CALUMET DR - ST JOHNS, FL 32259
• Tel: 904-704-9439 • Email: blakearch@outlook.com •

LAURA ST RESIDENCE
SINGLE-FAMILY RENOVATION
PROJECT ID: 2025 02
1417 N LAURA ST - JACKSONVILLE, FL 32206

MICHAEL BLAKE
ARCHITECT, FL
AR 98432

STATE OF FLORIDA
MICHAEL BLAKE
AR98432
REGISTERED ARCHITECT

DESCRIPTION	DATE
PERMIT REVIEW	8.25.25

PLUMBING PLANS

P1

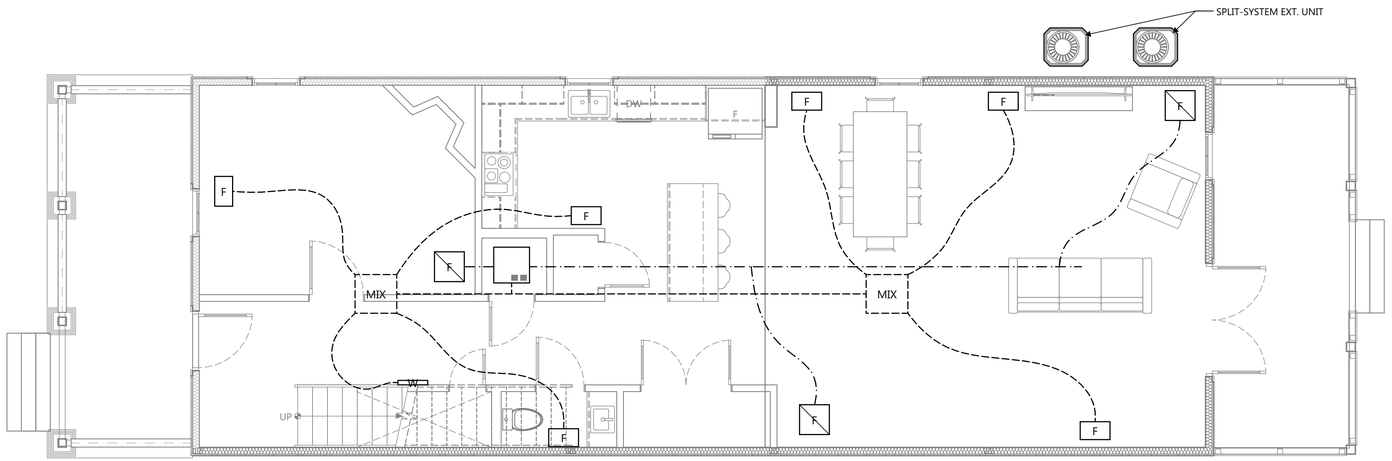

1 1ST FLOOR HVAC
SCALE: 1/4" = 1'-0"

0 2' 4' 8'

MECHANICAL NOTES:
1) MECHANICAL SUB-CONTRACTOR TO PROVIDE LOAD CALCS, UNIT SIZING, DUCT SIZING, AND DRAWINGS AS REQUIRED BY FBC 2024.
2) HVAC UNIT LOCATION TO BE COORDINATED W/ SUBCONTRACTOR.
3) CONDENSATION LINES TO BE 3/4" PVC TO OUTSIDE.
4) USE EXISTING HVAC LOCATIONS IN OTHER AREAS.

HVAC LEGEND

SYMBOL	DESCRIPTION
R	CEILING RETURN
R	WALL RETURN
R	FLOOR RETURN
F	FLOOR REGISTER
C	CEILING REGISTER
W	WALL REGISTER
	OUTDOOR CONDESOR UNIT
	INDOOR AIR HANDLER
MIX	MIXING BOX
	DENOTES RETURN LINE
	DENOTES SUPPLY LINE
	DENOTES 4" EXHAUST DUCT

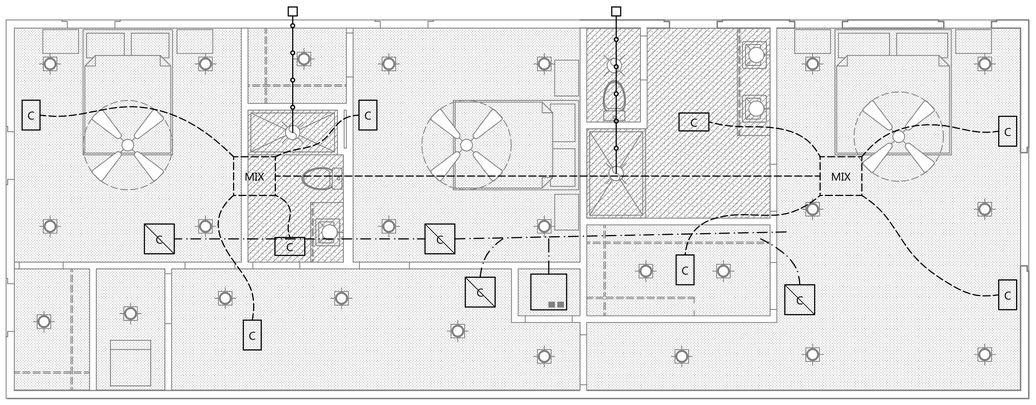

2 2ND FLOOR HVAC
SCALE: 1/4" = 1'-0"

0 2' 4' 8'

Blake Architecture & Design LLC
204 CALUMET DR - ST JOHNS, FL 32259
• Tel: 904.704.9439 • Email: blakearch@outlook.com •

LAURA ST RESIDENCE
SINGLE-FAMILY RENOVATION
PROJECT ID: 2025 02
1417 N LAURA ST - JACKSONVILLE, FL 32206

MICHAEL BLAKE
ARCHITECT, FL
AR 98432

STATE OF FLORIDA
MICHAEL BLAKE
AR98432
REGISTERED ARCHITECT

DESCRIPTION	DATE
PERMIT REVIEW	8.25.25

HVAC PLANS

M1

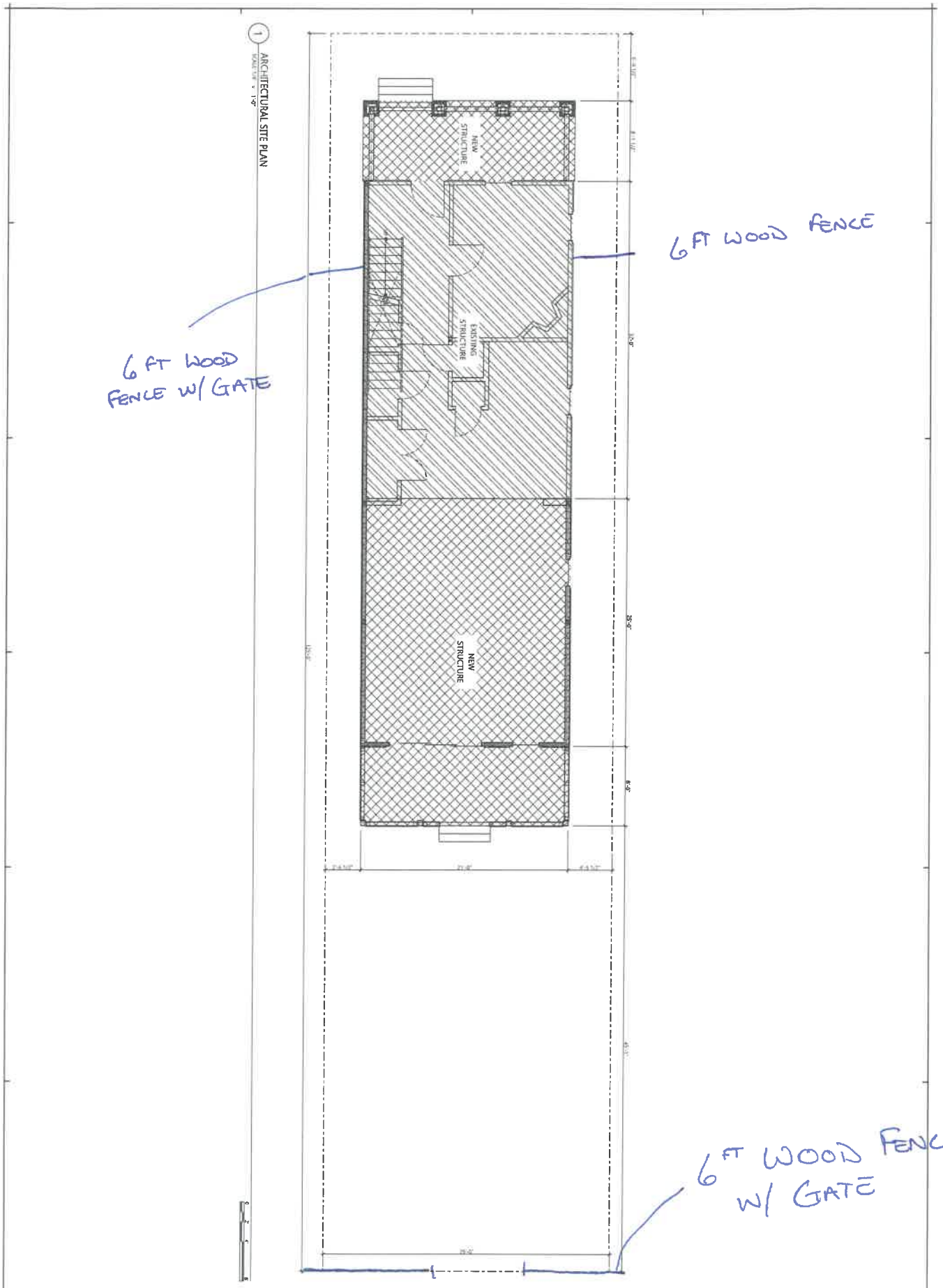

A302

ARCHITECTURAL SITE PLAN

DATE	DESCRIPTION
7.8.25	PERMIT REVIEW

MICHAEL BLAKE
ARCHITECT, FL
AR 98432
Digitally signed by Michael R Blake
Date: 2025.07.08 20:26:59-04'00'

LAURA ST RESIDENCE
SINGLE-FAMILY RENOVATION
PROJECT ID: 2025 02
1417 N LAURA ST - JACKSONVILLE, FL 32206

Blake Architecture & Design LLC
204 CALUMET DR - ST JOHNS, FL 32259
- Tel 904.704.9430 - Email blakearch@outlook.com -

Tracking # 32716

COJ Window Survey Form – Cover Page

Date Completed 7/24/25

Required Documents

☑	Completed window survey form list to include **ALL** windows on the structure (often requires multiple pages)
☑	Photographs or drawings of each side of the structure with all windows numbered to correspond with the "Window #" in the survey form list
☑	Close-up detailed numbered photos showing all damage identified in the window survey form list
☑	Proposed replacement window product material (wood, vinyl, clad, etc.) and exterior grid pattern (3/1, 4/4, 6/6, 1/1, etc)

** Please note that if one of the required documents is not submitted with the application, it will cause a delay in the review/process time.*

Project Information

12	Total number of window openings
12	Number of windows that will be replaced
1	Number of historic/original windows
11	Number of non-historic windows
4"	Exterior window sill depth in inches (Window Recession)

Definitions

- **Historic Windows:** Windows that have been on the structure for 50 or more years.
- **Non-Historic Windows:** Replacement windows that have been on the structure for less than 50 years
- **Original:** Windows that were installed when the structure was originally constructed.
- **Sill Depth:** How deep into the wall plane a window is recessed

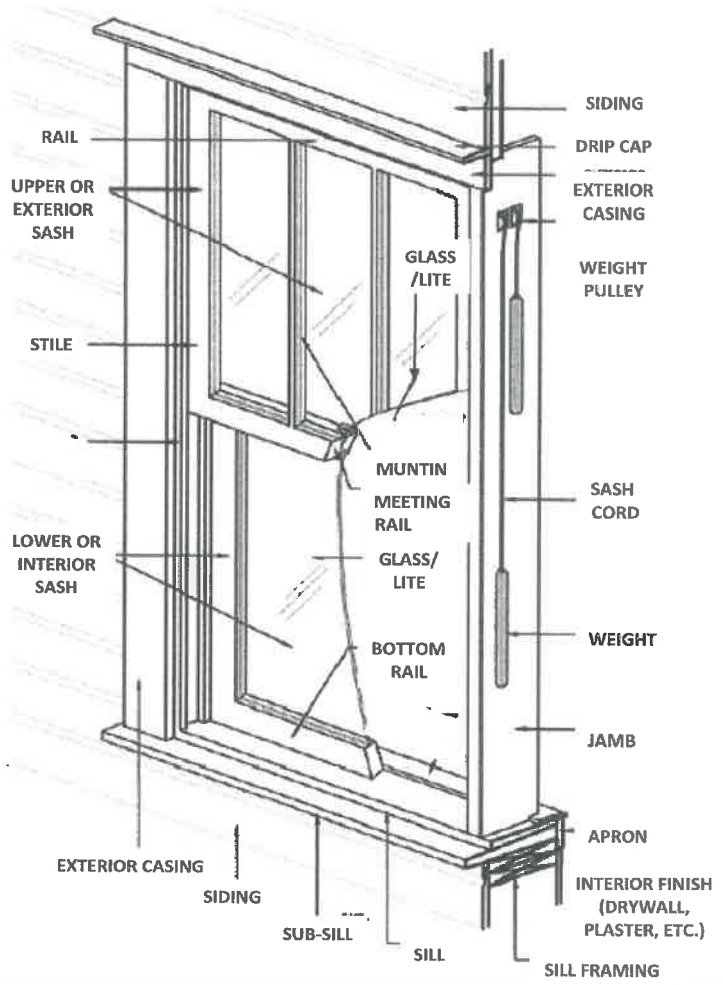

Authorization

I hereby certify that I have read and understand the information contained in the Window Survey Form and the HPS Window Supplement, that I am the owner or authorized agent for the owner with authority to complete this Form, and that all of the information contained in this application, including the attachments, is true and correct to the best of my knowledge.

Owner

Print name: RICHARD TRENDEL

Signature: R Tr

Applicant or Agent *(if different than owner)*

Print name: _____

Signature: _____

COJ Window Survey Form – Page # 1 out of 3

Window #	Existing (Example)					Proposed (Example)			
0	Material:	Dimensions:	Pattern:	Condition:	Damage:	Scope of Work	Material:	Dimensions:	Pattern:
	Wood	30 x 62	4 / 4	Bad	Termites	Replace Window	Wood	30 x 62	4 / 4
Additional Info:	Based on the attached photos and termite report, this window is extremely rotted and cannot be repaired.								

Window #	Existing					Proposed			
1	Material:	Dimensions:	Pattern:	Condition:	Damage:	Scope of Work	Material:	Dimensions:	Pattern:
	ALUM	32 x 72	0/0	NOT HISTORIC	NON FUNCTION	REPLACE	VINYL	32 x 72	2/2
Additional Info:									

Window #	Existing					Proposed			
2	Material:	Dimensions:	Pattern:	Condition:	Damage:	Scope of Work	Material:	Dimensions:	Pattern:
	ALUM	32 x 72	0/0	NOT HISTORIC	NON-FUNCTION	REPLACE	VINYL	32 x 72	2/2
Additional Info:									

Window #	Existing					Proposed			
3	Material:	Dimensions:	Pattern:	Condition:	Damage:	Scope of Work	Material:	Dimensions:	Pattern:
	VINYL	32 x 72	0/0	NOT HISTORIC	NON-FUNCTION	REPLACE	VINYL	32 x 72	2/2
Additional Info:									

Window #	Existing					Proposed			
4	Material:	Dimensions:	Pattern:	Condition:	Damage:	Scope of Work	Material:	Dimensions:	Pattern:
	WOOD	32 x 72	2/0	BAD	NO FUNCTION, ONLY 1/2 THE WINDOW EXISTS	REPLACE	VINYL	32 x 72	2/2
Additional Info:									

Window #	Existing					Proposed			
5	Material:	Dimensions:	Pattern:	Condition:	Damage:	Scope of Work	Material:	Dimensions:	Pattern:
	VINYL	32 x 72	0/0	FAIR	NOT HISTORIC	REPLACE	VINYL	32 x 72	2/2
Additional Info:	0/0								

COJ Window Survey Form – Page # 2 out of 3

Window #	Existing					Proposed			
	Material:	Dimensions:	Pattern:	Condition:	Damage:	Scope of Work	Material:	Dimensions:	Pattern:
6	WOOD	32 X 72	2/2	BAD	NON FUNCTION	REPLACE	VINYL	32 X 72	2/2
Additional Info:	PLOTTED OUT								
Window #	**Existing**					**Proposed**			
	Material:	Dimensions:	Pattern:	Condition:	Damage:	Scope of Work	Material:	Dimensions:	Pattern:
7	VINYL	32 X 72	0/0	POOR	NOT HISTORY	REPLACE	VINYL	32 X 72	2/2
Additional Info:									
Window #	**Existing**					**Proposed**			
	Material:	Dimensions:	Pattern:	Condition:	Damage:	Scope of Work	Material:	Dimensions:	Pattern:
8	DOESN'T EXIST					NEW INSTALL	VINYL	32 X 60	2/2
Additional Info:									
Window #	**Existing**					**Proposed**			
	Material:	Dimensions:	Pattern:	Condition:	Damage:	Scope of Work	Material:	Dimensions:	Pattern:
9	DOESN'T EXIST					NEW INSTALL	VINYL	32 X 60	2/2
Additional Info:									
Window #	**Existing**					**Proposed**			
	Material:	Dimensions:	Pattern:	Condition:	Damage:	Scope of Work	Material:	Dimensions:	Pattern:
10	DOESN'T EXIST					NEW INSTALL	VINYL	32 X 60	2/2
Additional Info:									
Window #	**Existing**					**Proposed**			
	Material:	Dimensions:	Pattern:	Condition:	Damage:	Scope of Work	Material:	Dimensions:	Pattern:
11	DOESN'T EXIST					NEW INSTALL	VINYL	32 X 60	2/2
Additional Info:									

COJ Window Survey Form – Page # 3 out of 3

Window #	Existing					Proposed			
12	Material:	Dimensions:	Pattern:	Condition:	Damage:	Scope of Work	Material:	Dimensions:	Pattern:
		DOESN'T EXIST				NEW INSTALL	VINYL	32 X 60	2/2
Additional Info:									

Window #	Existing					Proposed			
	Material:	Dimensions:	Pattern:	Condition:	Damage:	Scope of Work	Material:	Dimensions:	Pattern:
	N/A			N/A	None	N/A	N/A		
Additional Info:									

Window #	Existing					Proposed			
	Material:	Dimensions:	Pattern:	Condition:	Damage:	Scope of Work	Material:	Dimensions:	Pattern:
	N/A			N/A	None	N/A	N/A		
Additional Info:									

Window #	Existing					Proposed			
	Material:	Dimensions:	Pattern:	Condition:	Damage:	Scope of Work	Material:	Dimensions:	Pattern:
	N/A			N/A	None	N/A	N/A		
Additional Info:									

Window #	Existing					Proposed			
	Material:	Dimensions:	Pattern:	Condition:	Damage:	Scope of Work	Material:	Dimensions:	Pattern:
	N/A			N/A	None	N/A	N/A		
Additional Info:									

Window #	Existing					Proposed			
	Material:	Dimensions:	Pattern:	Condition:	Damage:	Scope of Work	Material:	Dimensions:	Pattern:
	N/A			N/A	None	N/A	N/A		
Additional Info:									

Quote Date: 7/25/2025

Customer Name:
Address:

Phone:
Fax:
Customer Information:

Comments:

Project Name: Unassigned Project
Quote Name: Unassigned Quote
Quote Number: 5888216
Order Date: Quote Not Ordered
PO Number:

ITEM & SIZES	LOCATION / TAG	PRODUCT DESCRIPTION	UNIT PRICE / EXTENDED PRICE

Line Item: 100-1
Quantity: 1
RO Size: 32" X 72"
Unit Size: 31.5" X 71.5"

LAURA ST

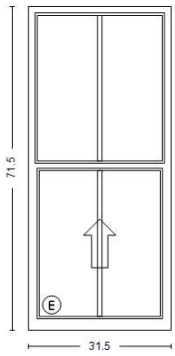

*** PRODUCT ***
Row 1 3540 Single Hung - Vent - 1 Units - 31.5W x 71.5H
*** DIMENSIONS ***
31.5W x 71.5H
*** FRAME ***
South, Vinyl, Frame Type - Fin, Exterior Color - White
*** GLASS ***
Glazing Type - Insulated, Dual, Glass Tint - Clear, HP Low-E, Argon Gas, Glass Strength - SSB
*** GRILLES ***
Grille Type - SDL-IS & OS w/ GBG, Grille Thickness/Style - 1" Sculptured, Grille Pattern - Colonial
Bottom Glass: Grille Division Type - Custom, Number Wide - 2, Number High - 1
Top Glass: Grille Division Type - Custom, Number Wide - 2, Number High - 1
*** SCREEN ***
Screen - Half, Screen Mesh Type - Charcoal Fiber, Screens Packed Separately - Yes
*** WRAPPING ***
Extension Jambs - None, J-Channel - None
*** NFRC ***
Series 3540::SingleHung, U-Factor::0.3, SHGC::0.19, VT::0.4
*** Performance ***
Series 3540::SingleHung, Calculated Positive DP Rating::50.13, Calculated Negative DP Rating::50.13, DP Rule ID::3540 SH, Rating Type::DesignPressure, Performance Grade::LC-PG35*, Water Rating::5.43, FL ID::41886, STC Rating::27, OITC Data::23

Unit Price: $490.56

3540 Single Hung - Vent - 2860EQ

Extended Price: $490.56

Units are viewed from the Exterior

Total Unit Count:	1
Sub Total:	$490.56
Freight:	$0.00
Labor:	$0.00
Sales Tax:	$36.79
Total Order Price:	$527.35

Submitted By: Please Print Name

Signature:

Date:

Accepted By: Please Print Name

Signature:

Date:

All ratings are for individual windows and doors only. Contact your sales representative for information regarding mulled or stacked units.

MI is not responsible for quoting errors. Verify that the quote is up-to-date and the accuracy of all information on the quote before placing an order. Line-Item Comments should not be used to alter configurations. Also verify product options and ratings on the Order Acknowledgment as it gives the most up-to-date product information and product ratings. Immediately report any differences to MI.

All sales are subject to and incorporate MI's Terms and Conditions of Sale and Limited Lifetime Product Warranty, which are available from MI and should be reviewed prior to placing an order. Any additional terms submitted by a customer or contained on its purchase order are rejected and shall not apply to this quote or any later sale unless expressly agreed by MI in writing. See MI's Field Testing Policy for field testing requirements and associated costs. The scope of responsibility of MI for product supplied is stated exclusively within this quote and the aforementioned documents.

For Information regarding MI's Product Handling Recommendations, please visit miwindows.com/handling

MI WINDOWS and DOORS

Milgard Manufacturing, LLC is a subsidiary of MI Windows and Doors, LLC

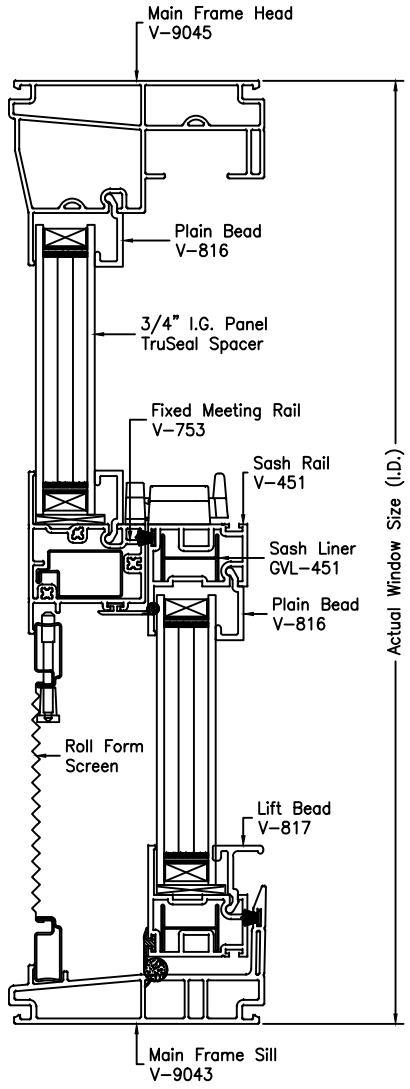

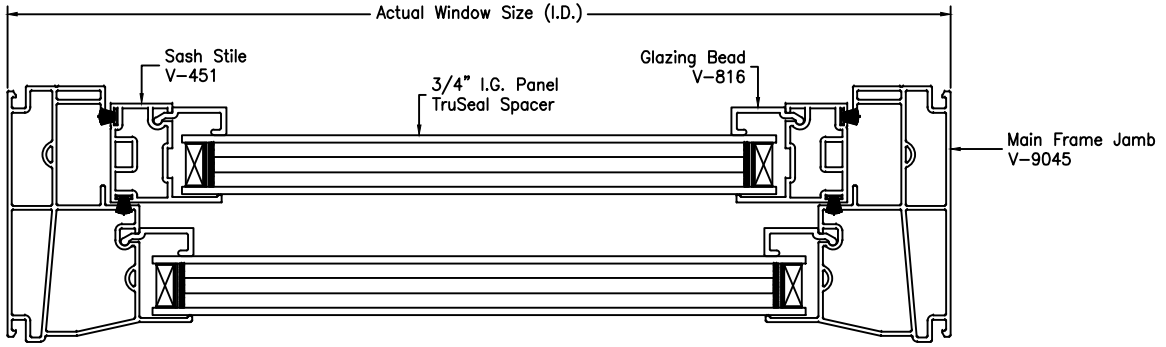

The information, design or data shown on this document or electronic media is the exclusive property of MI WINDOWS AND DOORS, INC. It is considered confidential and proprietary and is made available for limited used only. Its use or reproduction without the expressed written consent of MI WINDOWS AND DOORS, INC., is prohibited.

LTR.	DESCRIPTION	BY	DATE
–	–	–	–
–	–	–	–
–	–	–	–
–	–	–	–
	REVISIONS		

MI WINDOWS AND DOORS
650 WEST MARKET STREET • GRATZ, PA • 17030-0370

TITLE: 4300 Series Product Drawing
Single Hung w/Finless Main Frame

DFTM.	DATE	SCALE	DWG/PART NO.	REV.
BRS	09/02/2011	~~~~	4300SH-AS3	–

EXIT

PRIVATE
PROPERTY

COA-25-32942

2652/2654
Dellwood Ave

October 22, 2025

Report of the Jacksonville Planning Department
Certificate of Appropriateness Application COA-25-32942

Address: 2652/2654 Dellwood Avenue, RE# 065123-0000

Location: South side of Dellwood Avenue, between West Street and Acosta Street

Owner: Tesfaye Selmawit
2652 Dellwood Avenue
Jacksonville, Florida 32204

Applicant: Jon Thomas
Team K5 Permits & Consulting, LLC
176 East Highland Avenue
Clermont, Florida 34711

Year Built: c. 1936 (FMSF)

Designation: Riverside Avondale; Contributing

Request: Alterations – Window Replacement

Summary Scope of Work:

1. Replace twenty-one (21) windows with wood-clad product

Recommendation: **Deny**

PROJECT DESCRIPTION

COA-25-32942 is for the replacement of twenty-one (21) windows on a historic structure. The subject structure is a masonry vernacular multi-family residence characterized by its rectangular design, its hipped composition shingle roof, its brick chimneys, its predominantly 1/1 sash windows, and its two (2) offset entrances with cast stone pilasters. The existing windows on the structure include wooden 1/1 sash windows, non-original metal fixed windows, and non-original vinyl 6/6 windows with grilled-between-glass. As proposed, the application seeks to replace twenty-one (21) windows with new vinyl windows. The total includes the replacement of all nineteen (19) remaining historic wood windows and two (2) metal windows.

The replacement of repairable, historic windows on contributing structures requires review by the Jacksonville Historic Preservation Commission. The window to be replaced is potentially historic and appears to be within reasonable repair.

STAFF SUMMARY AND ANALYSIS

Staff considered the applicable Design Guidelines for the Historic District and the Ordinance Code criteria found in Sections 307.106(k), 307.106(l), 307.106(m), 307.106(n), and 307.106(o). The following is Staff's analysis:

- Staff conducted archival research to when the non-historic windows were previously replaced. There are no permits or approved COAs on record for any window alterations or repairs. The Florida Master Site File (FMSF) form for this property from 1991 identified that the windows on the structure were predominantly 1/1 sash windows with some jalousie windows that have replaced original wood frame windows. Because nineteen (19) of the windows to be replaced make up the remaining historic fenestration and appear to be within reasonable repair, the scope of work is inconsistent with Section 307.106(k)(1-3).
- Because nineteen (19) of the windows are original and in repairable condition, Staff recommends that these windows be repaired. While two (2) of the windows to be replaced are non-historic metal and replacement can be administratively recommended, the scope of work as proposed is inconsistent with the Ordinance Code criteria and the Design Guidelines. Furthermore, there have been no previously documented attempts to repair the historic windows and the proposed replacement comprises all of the remaining historic fenestration. Finally, the replacement material, vinyl, is inappropriate in cases where the replacement of historic wood windows is deemed permissible. The scope of work is therefore inconsistent with Section 307.106(l)(1, 2, and 6).
- The replacement is inconsistent with the Historic District Design Guidelines, sections on "Windows, Awnings, and Shutters." The Historic District Design Guidelines recommend the repair of historic windows instead of replacement. The proposed scope of work includes the replacement of historic windows which are within repair. Furthermore, when replacement is permissible, the Guidelines recommend that incompatible replacement products be avoided. The proposed vinyl product is an incompatible replacement material for wood windows.
- Staff should note that the provided window survey indicates a "0" light pattern to describe solid panes and 1/1 windows. Additionally, the provided window recession does not appear to be reasonably accurate.

For these reasons, it is the position of the Planning Department that the proposed work under the stated conditions is inconsistent with:

1. Chapter 307.106(k) General Standards: 1-3
2. Chapter 307.106(l) Guidelines on Alterations: 1, 2, and 6
3. Design Guidelines "Riverside-Avondale Historic District," Section on Windows, Awnings, and Shutters

CODE CRITERIA AND DESIGN GUIDELINES

General Criteria

- 307.106(k)(1) – The effect of the proposed work on the landmark, landmark site, or property within an historic district upon which such work is to be done;

- 307.106(k)(2) - The relationship between such work and other structures on the landmark site or other property in the historic district;

- 307.106(k)(3) - The extent to which the historic, architectural, or archaeological significance, architectural style, design, arrangement, texture and materials of the landmark or the property will be affected;

Alterations

- 307.106(l)(1) - Every reasonable effort shall be made to use a property for its originally intended purpose, or to provide a compatible use for a property that requires minimal alteration of the building structure, or site.
- 307.106(l)(2) - The distinguishing original qualities or character of a building, structure, or site shall not be destroyed. The removal or alteration of any historic material or distinctive architectural features shall be avoided when possible.

- 307.106(l)(6) - Deteriorated architectural features shall be repaired rather than replaced, wherever possible. In the event replacement is necessary, the new material shall match the material being replaced in composition, design, color, texture, and other visual qualities. However, technologically advanced materials shall be considered and used as replacement alternatives. Repair or replacement of missing architectural features shall be based on accurate duplications of features, substantiated by historical, physical, or pictorial evidence rather than on conjectural designs or the availability of different architectural elements from other buildings or structures.

Historic District Design Guidelines, "Windows, Awnings, and Shutters"

- Standard 6: Deteriorated historic features shall be repaired rather than replaced. Where the severity of deterioration requires replacement of a distinctive feature, the new feature shall match the old in design, color, texture and other visual qualities and, where possible, materials.

- Windows, Avoid #6: "Replacing windows that contribute to the character of a building with those that are incompatible in size, configuration, and reflective qualities or which alter the setback relationship between window and wall."

LOCATION MAP

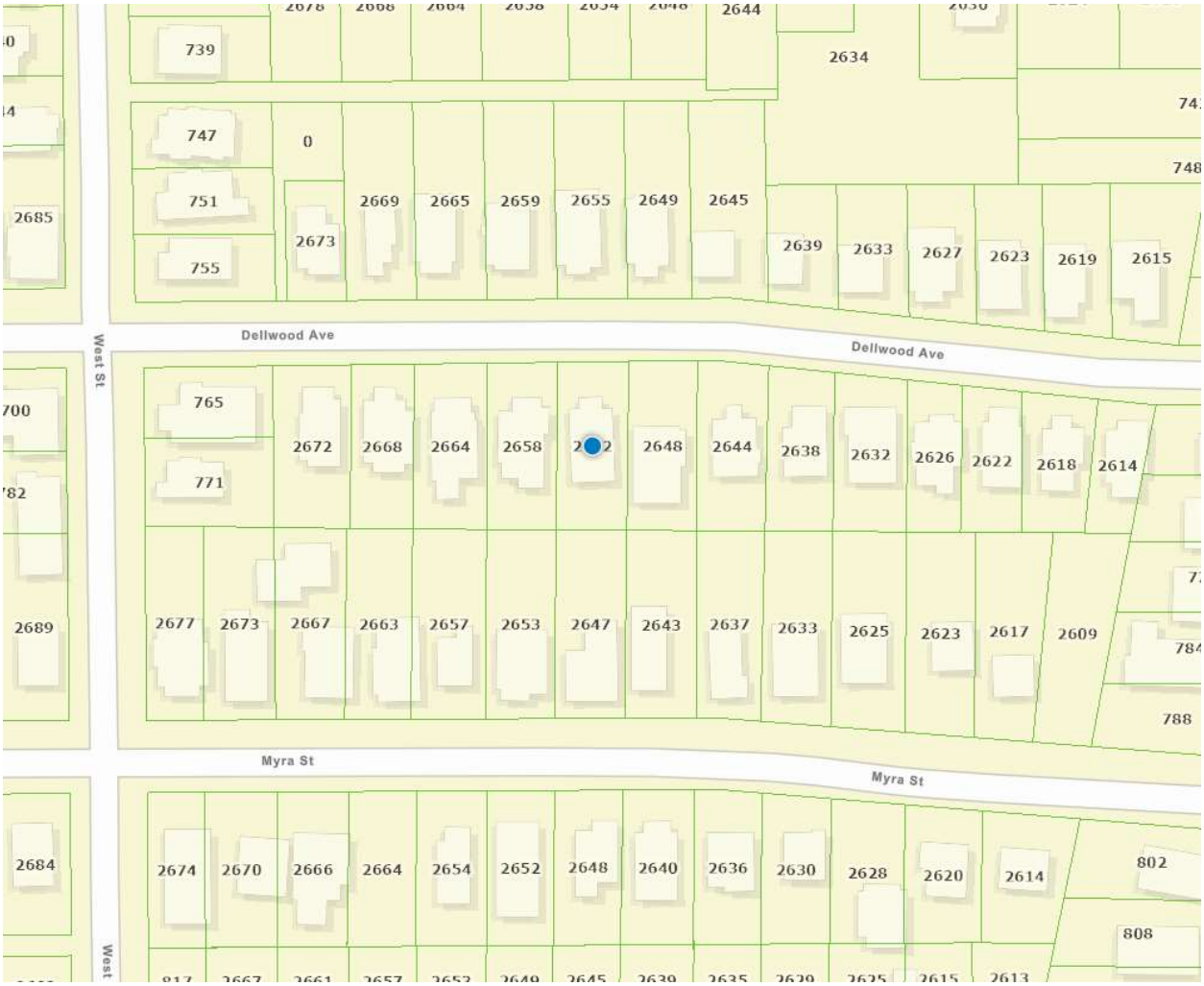

PICTURE OF PROPERTY WITH POSTED SIGN

Application For Certificate Of Appropriateness

Application Info

Tracking #	32942	**Application Status**	FOUND SUFFICIENT
Date Started	09/12/2025	**Date Submitted**	09/12/2025

Planning and Development Department Info

COA #	COA-25-32942
Admin Review	☐
Admin Recommendation	FORWARD
Admin Date Of Action	9/17/2025
Forwarded to JHPC	☑
JHPC Meeting Date	10/22/2025
Staff Recommendation	N/A
JHPC Recommendation	N/A
JHPC Date Of Action	N/A

Admin Details
N/A

JHPC Details
N/A

General Information On Applicant

Last Name THOMAS
First Name JON
Middle Name

Company Name TEAM K5

Mailing Address 176 E HIGHLAND AVE

City CLERMONT
State FL
Zip Code 34711

Phone 407 378 6682
Fax
Email JON.THOMAS@EXPEDITEPERMIT.COM

General Information On Owner(s)

Agent represents ◉ **Owner** ○ **Contractor** ○ **Architect** ○ **Consultant** ○ **Other**

Last Name TESFAYE
First Name SELMAWIT
Middle Name

Company/Trust Name

Mailing Address 2652 DELLWOOD AVE

City JACKSONVILLE
State FL
Zip Code 32204

Phone 9044050118
Fax
Email HILLSTREETINC@GMAIL.COM

Description Of Property

Property Appraiser's RE #(s) (10 digit number with a space ###### ####)

Map	RE#

	065123 0000

Location Of Property

General Location
Riverside/Avondale Historic District

House #	Street Name, Type and Direction	Zip Code
2652	DELLWOOD AVE	32204

Type Of Improvement

- ☐ **Addition**
- ☐ **Driveway**
- ☐ **New Construction**
- ☐ **Accessory Structures**
- ☐ **Alteration**
- ☐ **Relocation**
- ☑ **Window Replacement**
- ☐ **Other/Minor Repairs**
- ☐ **Fencing**
- ☐ **Demolition**
- ☐ **Reroof**

Describe proposed work below. Note affected features and changes in design or materials. Be as specific, brief, and legible as possible.
(Example: reroof; replacing gray 3-tab shingles with black architectural shingles).

Proposed Work
REPLACE 21 WINDOWS SIZE FOR SIZE WITH VINYL SIMONTON 6100 SERIES DOUBLE HUNG

Addition Information

Is this a violation? Check the box if it is. ☐

If you have been working with a planner choose one from the list

Window Replacement - Required Attachments For Complete Application

☑ **Window Survey -** Survey of existing windows including numbered photos of all windows/openings with elevation key and notes explaining window condition. If you need, there is a Window Survey template in the Forms & Instructions link to the left.

☑ **Window Design -** Proposed window design, light pattern and materials.

☑ **Window Product -** Brochure/sample of window product.

Additional Documents Provided

Application Certification

For applications that can be approved administratively, there is no application fee.

For all applications that must go before the Historic Preservation Commission, a fee will be applied based on the type of work performed.

Application completeness review: All applications for Certificate of Appropriateness ("Application") will be reviewed for completeness by Planning and Development Department Staff. Any Application determined to be incomplete, will be returned to the applicant with comments detailing the deficiencies. No further action on the Application will take place until the application deficiencies are addressed. Once the Application is determined to be complete, Planning and Development Department Staff will prepare an invoice for the cost of the Application.

Payment deadline: The Invoice must be paid by the payment deadline in order to have the Application heard on the next scheduled Jacksonville Historic Preservation Commission (JHPC) regular meeting. The payment deadline is outlined on the City of Jacksonville's Planning and Development Department Website. Only sufficient applications will be invoiced. It is for the benefit of the applicant to supply staff with a sufficient applications in advance of the payment deadline. Due to the complexity and volume of Applications received by the Planning and Development Department, there is no guarantee that COA Applications submitted on the day of the payment deadline will be heard at the next regular meeting of the JHPC.

I, hereby, certify that I am the owner or the authorized agent of the owner(s) of the property described herein, that all answers to the questions in this application and all information contained in the material attached to and made a part of this application, are accurate and true to the best of my knowledge and belief. I also attest by my signature that all required information for this application is completed and duly attached in the prescribed order. Furthermore, if the package is found to be lacking the above requirements, I understand that the application will be returned for correct information.

☑ I UNDERSTAND THE ABOVE DISCLAIMER REGARDING APPLICATION REVIEW. AGREED TO AND SUBMITTED.

14-30
RIVERSIDE PARK PLACE TERRACE
LOT 18

TESFAYE SELMAWIT
2652 DELLWOOD AV
JACKSONVILLE, FL 32204

2024

R-065123-0000

PRINTED 10/11/2024
BY: pao

Map Id: 6422 517101.21 1.55 1.00 1.00 RIVERSIDE NO 3

BUILDING CHARACTERISTICS

CATEGORY	TYPE	%	PTS
Exterior Wall	20 FACE BRICK	100	46.00
Roof Struct	3 GABLE OR HIP	100	6.00
Roofing Cover	3 ASPH/COMP SHNG	100	4.00
Interior Wall	3 PLASTERED	100	31.00
Int Flooring	12 HARDWOOD	100	13.00
Heating Fuel	4 ELECTRIC	100	1.00
Heating Type	4 FORCED-DUCTED	100	4.00
Air Cond	3 CENTRAL	100	7.00

CATEGORY	UNITS	ADJ
Stories	2.00	0
Bedrooms	5.00	0
Baths	3.00	0
Rooms / Units	3.00	0

BASE RATE ADJ	ADJ
Quality Adjustment	1.0000
Mkt/Design Factor	1.0000
Size Adj.	0.9400
TOTAL ADJUSTED POINTS	115
DEPRECIATION ADJ	ADJ

TYPE	STYLE	CLS	QUA	HX %	NHX %	LOC	% COMP
0802	01	4	03	0.00	100.00	1.00	100

REPL. COST NEW	AYB	EYB	DT	NORM	% GOOD
476,383	1936	1985	R3	39.25	60.75%

SAR	AREA	B	H	P.of B.	EFF. AREA	DPR VALUE
BAS	1,442		X	100	1,442	141,704
CEC	200			95	190	18,671
FUA	1,382		X	95	1,313	129,027
	3,024			2,824	2,945	$289,403

ACREAGE 0.00 PRICE/SF 98.27

0800 Multi-Family Units 2-9

** VALUE SUBJECT TO CHANGE **

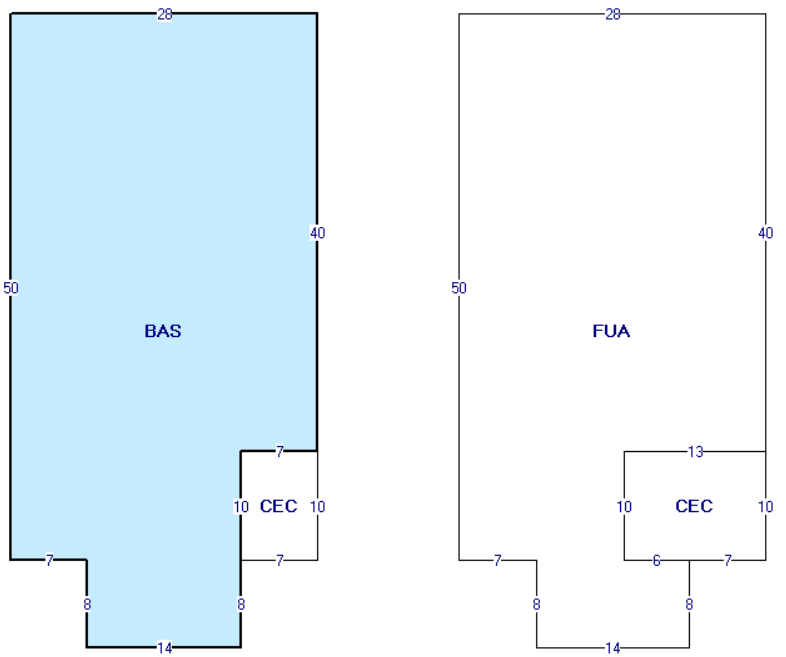

BUILDING: 1 AKA:

SITE ADDRESS: 2652 DELLWOOD AVE JACKSONVILLE 32204- 0802 TRIPLEX

Duval County Property Appraisers Office Tax Dist USD1

VALUE SUMMARY

PRIMARY VALUATION METHOD	Gross Rent Multiplie
BUILDING VALUE	289,403
EXTRA FEATURE VALUE	1,760
TOTAL MARKET LAND VALUE	61,100
MARKET VALUE OF AG LAND	0
TOTAL LAND VALUE AG + COMMON	0
MARKET VALUE	508,320
ASSESSED VALUE	351,840
CAP BASE YEAR	0
TAXABLE VALUE	351,840
EXEMPTIONS	None
TOTAL EXEMPTIONS VALUE	0
SENIOR EXEMPTION VALUE	0
SR/HISTORIC TAXABLE VALUE	N/A

PERMIT NO.	TP	ST.	DESCRIPTION	EST VALUE	ISSUE DATE

BUILDING DIMENSIONS

BAS:7,58:=N8 W7 N50 E28 S40 W7 S18 W14 $ CEC2017: 21,40:=S10 E7 N10 W7 $ FUA:41,0:=E28 S40 W13 S10 E6 S8 W14 N8 W7 N50 $ CEC2017:56,40:=S10 E13 N10 W13 $.

BUILDING NOTES

LN	VOLUME / YEAR	PAGE / CLERK	DATE OF SALE	IN	QU	VI	RE	SALES PRICE	NOTE AMOUNT	MAC	MAC AMOUNT	GRANTOR	GRANTEE	SALES NOTE
1	13653	01546	11/15/2006	WD	Q	I	02	245000	0	N	0	IVY CHUCK R	TESFAYE SELMAWIT	20070222 VER DR219
2	12868	00272	10/18/2005	WD	U	I	38	110000	0	N	0	GUERRERO PATRICIA A	IVY CHUCK R	20060123
3	12108	01273	9/23/2004	MS	U	I	16	100	0	N	0	DEL SANTO PETER B		20050224
4	11843	00466	12/6/2002	MS	U	I	16	100	0	N	0	DEL SANTO PETER B		20050224 PETER B DEL

LN	OB/XF CODE	DESCRIPTION	BLD	HX %	NHX %	LENGTH	WIDTH	UNITS	GRADE	FACTOR	UNIT PRICE	ADJ UNIT PRICE	ORIG COND	ACTUAL YEAR	EFF YEAR	YEAR ON ROLL	% COND	OB/XF MKT VALUE
1	FPMR7	Fireplace Masonry	1	0.00	100.00	0	0	2.00	3	100	4,398.75	4,398.75	100	1936	1936		20	1,760

APPRAISAL DATES	DATE	APPRAISED BY
BUILDING	5/3/2017	SGB
LAND LINES	7/8/2002	KEK
VALUE REVIEW	7/10/2024	LGS
TRIENNIAL	6/4/2012	DCG
INCOME	7/8/2002	KEK

LT	LN	USE CODE	LAND USE DESCRIPTION	HX %	NHX %	RD	LOC ZONE	FRONT	DEPTH	SIZE FACTOR	UNITS	UNIT TYPE	DT	DPTH FACT	COND FACTOR	UNIT PRICE	ADJ UNIT PRICE	LAND VALUE
C	1	0101	RES MD 8-19 UNITS PER AC	0.00	100.00		RMD-A	50.00	117.00	100.00	50.00	F	1	0.94	1.00	1,300.00	1,222.00	61,100

LN	DATE	BLD	USER ID	CD	PARCEL NOTES

Tracking # _____

COJ Window Survey Form – Cover Page

Date Completed _____

Required Documents

☐	Completed window survey form list to include **ALL** windows on the structure (often requires multiple pages)
☑	Photographs or drawings of each side of the structure with all windows numbered to correspond with the "Window #" in the survey form list
☐	Close-up detailed numbered photos showing all damage identified in the window survey form list
☐	Proposed replacement window product material (wood, vinyl, clad, etc.) and exterior grid pattern (3/1, 4/4, 6/6, 1/1, etc)

** Please note that if one of the required documents is not submitted with the application, it will cause a delay in the review/process time.*

Project Information

41	Total number of window openings
21	Number of windows that will be replaced
19	Number of historic/original windows
22	Number of non-historic windows
5	Exterior window sill depth in inches (Window Recession)

Definitions

- **Historic Windows:** Windows that have been on the structure for 50 or more years.
- **Non-Historic Windows:** Replacement windows that have been on the structure for less than 50 years
- **Original:** Windows that were installed when the structure was originally constructed.
- **Sill Depth:** How deep into the wall plane a window is recessed

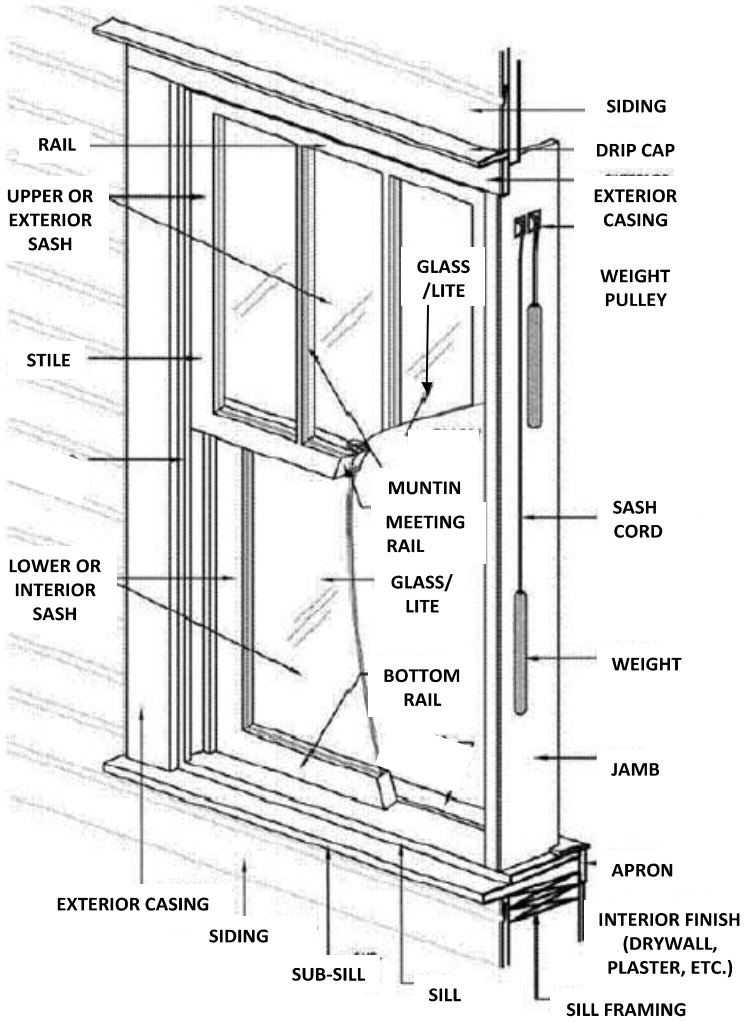

Authorization

I hereby certify that I have read and understand the information contained in the Window Survey Form and the HPS Window Supplement, that I am the owner or authorized agent for the owner with authority to complete this Form, and that all of the information contained in this application, including the attachments, is true and correct to the best of my knowledge.

Owner

Print name: Selamawit Tesfaye

Signature: Selamawit Tesfaye

Applicant or Agent *(if different than owner)*

Print name: Arthur Francis

Signature: _____

418

COJ Window Survey Form – Page # 1 out of 7

Window # 0	Existing (Example)					Proposed (Example)			
	Material:	Dimensions:	Pattern:	Condition:	Damage:	Scope of Work	Material:	Dimensions:	Pattern:
	Wood	30 x 62	4 / 4	Bad	Termites	Replace Window	Wood	30 x 62	4 / 4
Additional Info:	Based on the attached photos and termite report, this window is extremely rotted and cannot be repaired.								

Window # 1	Existing					Proposed			
	Material:	Dimensions:	Pattern:	Condition:	Damage:	Scope of Work	Material:	Dimensions:	Pattern:
	Wood	36 x 64	0	Bad	Rot	Replace Window	Vinyl	36 x64	0
Additional Info:									

Window # 2	Existing					Proposed			
	Material:	Dimensions:	Pattern:	Condition:	Damage:	Scope of Work	Material:	Dimensions:	Pattern:
	Wood	36 x 64	0	Bad	Rot	Replace Window	Vinyl	36 x 64	0
Additional Info:									

Window # 3	Existing					Proposed			
	Material:	Dimensions:	Pattern:	Condition:	Damage:	Scope of Work	Material:	Dimensions:	Pattern:
	Wood	36 x 45	0	Bad	Rot	Replace Window	Vinyl	36 x 45	0
Additional Info:									

Window # 4	Existing					Proposed			
	Material:	Dimensions:	Pattern:	Condition:	Damage:	Scope of Work	Material:	Dimensions:	Pattern:
	Wood	36 x 64	0	Bad	Rot	Replace Window	Vinyl	36 x 64	0
Additional Info:									

Window # 5	Existing					Proposed			
	Material:	Dimensions:	Pattern:	Condition:	Damage:	Scope of Work	Material:	Dimensions:	Pattern:
	Wood	36 x 64	0	Bad	Rot	Replace Window	Vinyl	36 x 64	0
Additional Info:									

COJ Window Survey Form – Page # 2 out of 7

Window #	Existing					Proposed			
6	Material:	Dimensions:	Pattern:	Condition:	Damage:	Scope of Work	Material:	Dimensions:	Pattern:
	Wood	36 x 64	0	Bad	Rot	Replace Window	Vinyl	36 x 64	0
Additional Info:									

Window #	Existing					Proposed			
7	Material:	Dimensions:	Pattern:	Condition:	Damage:	Scope of Work	Material:	Dimensions:	Pattern:
	Wood	36 x 64	0	Other	Rot	Replace Window	Vinyl	36 x 64	0
Additional Info:									

Window #	Existing					Proposed			
8	Material:	Dimensions:	Pattern:	Condition:	Damage:	Scope of Work	Material:	Dimensions:	Pattern:
	Wood	36 x 64	0	Bad	Rot	Replace Window	Vinyl	36 x 64	0
Additional Info:									

Window #	Existing					Proposed			
9	Material:	Dimensions:	Pattern:	Condition:	Damage:	Scope of Work	Material:	Dimensions:	Pattern:
	Wood	36 x 64	0	Bad	Rot	Replace Window	Vinyl	36 x 64	0
Additional Info:									

Window #	Existing					Proposed			
10	Material:	Dimensions:	Pattern:	Condition:	Damage:	Scope of Work	Material:	Dimensions:	Pattern:
	Wood	36 x 64	0	Bad	Rot	Replace Window	Vinyl	36 x 64	0
Additional Info:									

Window #	Existing					Proposed			
11	Material:	Dimensions:	Pattern:	Condition:	Damage:	Scope of Work	Material:	Dimensions:	Pattern:
	Wood	36 x 44	0	Bad	Rot	Replace Window	Vinyl	36 x 44	0
Additional Info:									

COJ Window Survey Form – Page # _3_ out of __7_

Window #	Existing					Proposed			
12	Material:	Dimensions:	Pattern:	Condition:	Damage:	Scope of Work	Material:	Dimensions:	Pattern:
	Wood	40 x 44	0	Bad	Rot	Replace Window	Vinyl	40 x 44	0
Additional Info:									

Window #	Existing					Proposed			
13	Material:	Dimensions:	Pattern:	Condition:	Damage:	Scope of Work	Material:	Dimensions:	Pattern:
	Wood	36 x 64	0	Other	Rot	Replace Window	Vinyl	36 x 64	0
Additional Info:									

Window #	Existing					Proposed			
14	Material:	Dimensions:	Pattern:	Condition:	Damage:	Scope of Work	Material:	Dimensions:	Pattern:
	Wood	36 x 64	0	Bad	Rot	Replace Window	Vinyl	36 x 64	0
Additional Info:									

Window #	Existing					Proposed			
15	Material:	Dimensions:	Pattern:	Condition:	Damage:	Scope of Work	Material:	Dimensions:	Pattern:
	Wood	36 x 64	0	Bad	Rot	Replace Window	Vinyl	36 x 64	0
Additional Info:									

Window #	Existing					Proposed			
16	Material:	Dimensions:	Pattern:	Condition:	Damage:	Scope of Work	Material:	Dimensions:	Pattern:
	Wood	36 x 64	0	Bad	Rot	Replace Window	Vinyl	36 x 64	0
Additional Info:									

Window #	Existing					Proposed			
17	Material:	Dimensions:	Pattern:	Condition:	Damage:	Scope of Work	Material:	Dimensions:	Pattern:
	Metal	52 x 64	0	Bad	Rot	Replace Window	Vinyl	52 x 64	0
Additional Info:									

COJ Window Survey Form – Page # 4 out of 7

Window #	Existing					Proposed			
18	Material:	Dimensions:	Pattern:	Condition:	Damage:	Scope of Work	Material:	Dimensions:	Pattern:
	Metal	52 x 64	0	Bad	Rot	Replace Window	Vinyl	52 x 64	0
Additional Info:									

Window #	Existing					Proposed			
19	Material:	Dimensions:	Pattern:	Condition:	Damage:	Scope of Work	Material:	Dimensions:	Pattern:
	Wood	36 x 57	0	Other	Rot	Replace Window	Vinyl	36 x 57	0
Additional Info:									

Window #	Existing					Proposed			
20	Material:	Dimensions:	Pattern:	Condition:	Damage:	Scope of Work	Material:	Dimensions:	Pattern:
	Wood	36 x 64	0	Bad	Rot	Replace Window	Vinyl	36 x 64	0
Additional Info:									

Window #	Existing					Proposed			
21	Material:	Dimensions:	Pattern:	Condition:	Damage:	Scope of Work	Material:	Dimensions:	Pattern:
	Wood	36 x 64	0	Bad	Rot	Replace Window	Vinyl	36 x 64	0
Additional Info:									

Window #	Existing					Proposed			
22	Material:	Dimensions:	Pattern:	Condition:	Damage:	Scope of Work	Material:	Dimensions:	Pattern:
	Metal	N/A	0	N/A	None	Keep Window	N/A	N/A	0
Additional Info:									

Window #	Existing					Proposed			
23	Material:	Dimensions:	Pattern:	Condition:	Damage:	Scope of Work	Material:	Dimensions:	Pattern:
	Metal	N/A	0	N/A	None	Keep Window	N/A	N/A	0
Additional Info:									

COJ Window Survey Form – Page # 5 out of 7

Window #	Existing					Proposed			
24	Material:	Dimensions:	Pattern:	Condition:	Damage:	Scope of Work	Material:	Dimensions:	Pattern:
	Metal	N/A	0	N/A	None	Keep Window	N/A	N/A	0
Additional Info:									

Window #	Existing					Proposed			
25	Material:	Dimensions:	Pattern:	Condition:	Damage:	Scope of Work	Material:	Dimensions:	Pattern:
	Vinyl	N/A	P	N/A	None	Keep Window	N/A	N/A	0
Additional Info:									

Window #	Existing					Proposed			
26	Material:	Dimensions:	Pattern:	Condition:	Damage:	Scope of Work	Material:	Dimensions:	Pattern:
	Vinyl	N/A	0	N/A	None	Keep Window	N/A	N/A	0
Additional Info:									

Window #	Existing					Proposed			
27	Material:	Dimensions:	Pattern:	Condition:	Damage:	Scope of Work	Material:	Dimensions:	Pattern:
	Vinyl	N/A	0	N/A	None	Keep Window	N/A	N/A	0
Additional Info:									

Window #	Existing					Proposed			
28	Material:	Dimensions:	Pattern:	Condition:	Damage:	Scope of Work	Material:	Dimensions:	Pattern:
	Vinyl	N/A	0	N/A	None	Keep Window	N/A	N/A	0
Additional Info:									

Window #	Existing					Proposed			
29	Material:	Dimensions:	Pattern:	Condition:	Damage:	Scope of Work	Material:	Dimensions:	Pattern:
	Vinyl	N/A	0	N/A	None	Keep Window	N/A	N/A	0
Additional Info:									

COJ Window Survey Form – Page # 6 out of 7

Window #	Existing					Proposed			
30	Material:	Dimensions:	Pattern:	Condition:	Damage:	Scope of Work	Material:	Dimensions:	Pattern:
	Vinyl	N/A	0	N/A	None	Keep Window	N/A	N/A	0
Additional Info:									

Window #	Existing					Proposed			
31	Material:	Dimensions:	Pattern:	Condition:	Damage:	Scope of Work	Material:	Dimensions:	Pattern:
	Vinyl	N/A	0	N/A	None	Keep Window	N/A	N/A	0
Additional Info:									

Window #	Existing					Proposed			
32	Material:	Dimensions:	Pattern:	Condition:	Damage:	Scope of Work	Material:	Dimensions:	Pattern:
	Vinyl	N/A	0	N/A	None	Keep Window	N/A	N/A	0
Additional Info:									

Window #	Existing					Proposed			
33	Material:	Dimensions:	Pattern:	Condition:	Damage:	Scope of Work	Material:	Dimensions:	Pattern:
	Vinyl	N/A	0	N/A	None	Keep Window	N/A	N/A	0
Additional Info:									

Window #	Existing					Proposed			
34	Material:	Dimensions:	Pattern:	Condition:	Damage:	Scope of Work	Material:	Dimensions:	Pattern:
	Vinyl	N/A	0	N/A	None	Keep Window	N/A	N/A	0
Additional Info:									

Window #	Existing					Proposed			
35	Material:	Dimensions:	Pattern:	Condition:	Damage:	Scope of Work	Material:	Dimensions:	Pattern:
	Vinyl	N/A	0	N/A	None	Keep Window	N/A	N/A	0
Additional Info:									

COJ Window Survey Form – Page # _7_ out of __7_

Window #	Existing					Proposed			
36	Material:	Dimensions:	Pattern:	Condition:	Damage:	Scope of Work	Material:	Dimensions:	Pattern:
	Vinyl	N/A	0	N/A	None	Keep Window	N/A	N/A	0
Additional Info:									

Window #	Existing					Proposed			
37	Material:	Dimensions:	Pattern:	Condition:	Damage:	Scope of Work	Material:	Dimensions:	Pattern:
	Vinyl	N/A	0	N/A	None	Keep Window	N/A	N/A	0
Additional Info:									

Window #	Existing					Proposed			
38	Material:	Dimensions:	Pattern:	Condition:	Damage:	Scope of Work	Material:	Dimensions:	Pattern:
	Vinyl	N/A	0	N/A	None	Keep Window	N/A	N/A	0
Additional Info:									

Window #	Existing					Proposed			
39	Material:	Dimensions:	Pattern:	Condition:	Damage:	Scope of Work	Material:	Dimensions:	Pattern:
	Vinyl	N/A	0	N/A	None	Keep Window	N/A	N/A	0
Additional Info:									

Window #	Existing					Proposed			
40	Material:	Dimensions:	Pattern:	Condition:	Damage:	Scope of Work	Material:	Dimensions:	Pattern:
	Vinyl	N/A	0	N/A	None	Keep Window	N/A	N/A	0
Additional Info:									

Window #	Existing					Proposed			
41	Material:	Dimensions:	Pattern:	Condition:	Damage:	Scope of Work	Material:	Dimensions:	Pattern:
	Metal	103 x 64	0	N/A	None	Keep Window	N/A	N/A	0
Additional Info:									

1

1

2

2

3

3

4

4

5

5

6

6

7

7

8

8

9

9

10

10

11

11

12

12

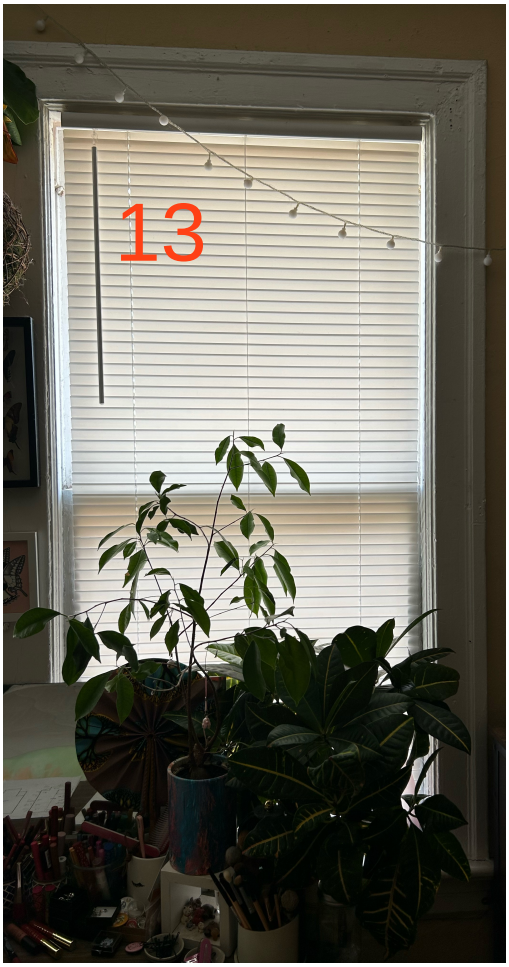
13

13

14

14

15

15

16

16

17

17

18

18

19

19

20

20

21

21

22

22

23

23

24

24

25

25

26

26

27

27

28

28

29

29

30

30

31

31

32

32

33

33

34

34

35

35

36

37

37

38

38

39

39

40

40

41

41

CUSTOMER TOTALS COPY

QUOTATION #3355279

Date Entered:	**8/29/2025**
Date Printed:	**8/29/2025**
Printed By:	**Sheba Hooks**

SOLD TO:
The Home Depot
Accounts Payable, B-12
2455 Paces Ferry Road NW
Atlanta, GA 30339-4024
Phone: 407-870-3132
Fax:

SHIP TO:
THD/JACKSONVILLE-Jacksonville
HDE Branch Warehouse
7018 AC Skinner Pkwy Ste 225
Jacksonville, FL 32256
Phone: 407-870-3132
Fax:

PO NUMBER	QUOTE NAME	PROJECT NAME
54110570	TESFAYE	Unassigned

LineItem #	Qty.	Description
100-1	1	6100 Double Hung 31" X 60.5" Operation = Operating, Frame = Replacement Frame (2R), Ext. Color = White, Int. Color = White, Glass Package = Standard Glass Options, ProSolar Low E, Argon, Intercept, 3/4"IGU, Glass Thickness = 3/32 in - 3/32 out SS, Upper = Annealed, Lower = Annealed, Locks = 2, White, Cam, Air Latches = 2, Sill Extender, Head Expander, Screen Coverage = Half, Fiberglass, Extruded, U-Factor = 0.32, SHGC = 0.3, VT = 0.53, STC = 0, CPD Number = SBP-A-112-08019-00001, Meets Energy Star Zones = None, DP = 35, AAMA, TDI = WIN-1601, Florida Approval Code = 5167 **RO:** 31.25 x 61 **Room ID:** Living Room

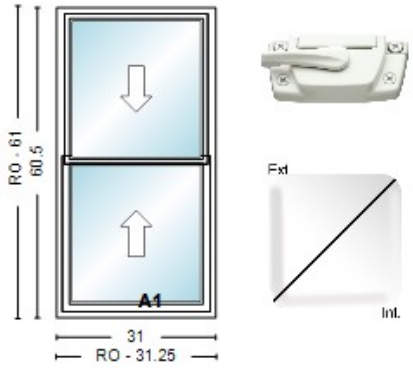

Initials: _____

LineItem #	Qty.	Description
200-1	1	6100 Double Hung 31" X 60.5" Operation = Operating, Frame = Replacement Frame (2R), Ext. Color = White, Int. Color = White, Glass Package = Standard Glass Options, ProSolar Low E, Argon, Intercept, 3/4"IGU, Glass Thickness = 3/32 in - 3/32 out SS, Upper = Annealed, Lower = Annealed, Locks = 2, White, Cam, Air Latches = 2, Sill Extender, Head Expander, Screen Coverage = Half, Fiberglass, Extruded, U-Factor = 0.32, SHGC = 0.3, VT = 0.53, STC = 0, CPD Number = SBP-A-112-08019-00001, Meets Energy Star Zones = None, DP = 35, AAMA, TDI = WIN-1601, Florida Approval Code = 5167 **RO:** 31.25 x 61 **Room ID:** Living Room

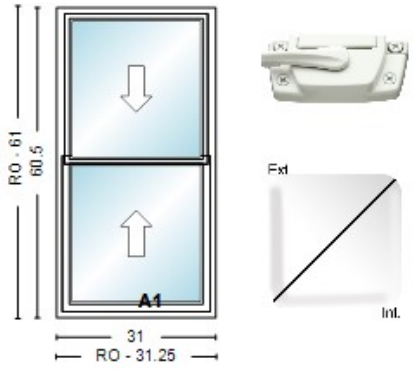

Initials: _____

PO NUMBER	QUOTE NAME	PROJECT NAME
54110570	TESFAYE	Unassigned

LineItem #	Qty.	Description
300-1 **RO:** 31.25 x 42 **Room ID:** Bathroom	1	6100 Double Hung 31" X 41.5" Operation = Operating, Frame = Replacement Frame (2R), Ext. Color = White, Int. Color = White, Glass Package = Standard Glass Options, ProSolar Low E, Argon, Intercept, 3/4"IGU, Glass Thickness = 1/8 in - 1/8 out DS, Upper = Annealed, Obscure Upper, Lower = Tempered, Obscure Lower, Locks = 2, White, Cam, Air Latches = 2, Sill Extender, Head Expander, Screen Coverage = Half, Fiberglass, Extruded, U-Factor = 0.32, SHGC = 0.29, VT = 0.53, STC = 0, CPD Number = SBP-A-112-08020-00001, Meets Energy Star Zones = None, DP = 35, AAMA, TDI = WIN-1601, Florida Approval Code = 5167

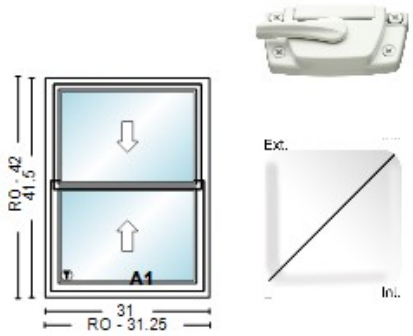

Initials: _____

LineItem #	Qty.	Description
400-1 **RO:** 31.25 x 61.75 **Room ID:** Bedroom	1	6100 Double Hung 31" X 61.25" Operation = Operating, Frame = Replacement Frame (2R), Ext. Color = White, Int. Color = White, Glass Package = Standard Glass Options, ProSolar Low E, Argon, Intercept, 3/4"IGU, Glass Thickness = 3/32 in - 3/32 out SS, Upper = Annealed, Lower = Annealed, Locks = 2, White, Cam, Air Latches = 2, Sill Extender, Head Expander, Screen Coverage = Half, Fiberglass, Extruded, U-Factor = 0.32, SHGC = 0.3, VT = 0.53, STC = 0, CPD Number = SBP-A-112-08019-00001, Meets Energy Star Zones = None, DP = 35, AAMA, TDI = WIN-1601, Florida Approval Code = 5167

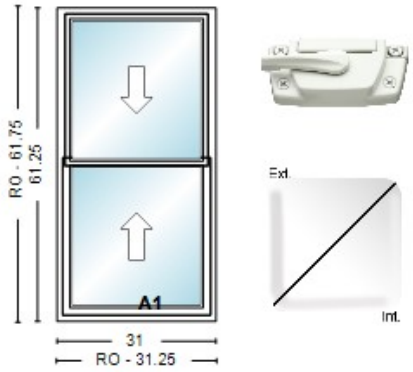

Initials: _____

PO NUMBER	QUOTE NAME	PROJECT NAME
54110570	TESFAYE	Unassigned

LineItem #	Qty.	Description
500-1	1	6100 Double Hung 31" X 61.25" Operation = Operating, Frame = Replacement Frame (2R), Ext. Color = White, Int. Color = White, Glass Package = Standard Glass Options, ProSolar Low E, Argon, Intercept, 3/4"IGU, Glass Thickness = 3/32 in - 3/32 out SS, Upper = Annealed, Lower = Annealed, Locks = 2, White, Cam, Air Latches = 2, Sill Extender, Head Expander, Screen Coverage = Half, Fiberglass, Extruded, U-Factor = 0.32, SHGC = 0.3, VT = 0.53, STC = 0, CPD Number = SBP-A-112-08019-00001, Meets Energy Star Zones = None, DP = 35, AAMA, TDI = WIN-1601, Florida Approval Code = 5167 **RO:** 31.25 x 61.75 **Room ID:** Bedroom

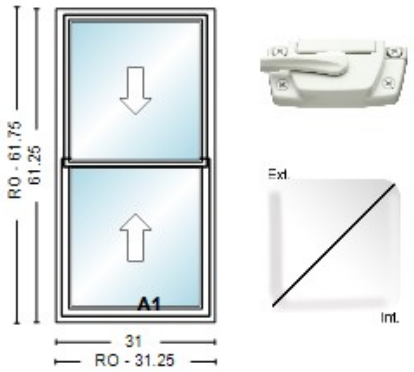

Initials: _____

LineItem #	Qty.	Description
600-1	1	6100 Double Hung 31" X 61.25" Operation = Operating, Frame = Replacement Frame (2R), Ext. Color = White, Int. Color = White, Glass Package = Standard Glass Options, ProSolar Low E, Argon, Intercept, 3/4"IGU, Glass Thickness = 3/32 in - 3/32 out SS, Upper = Annealed, Lower = Annealed, Locks = 2, White, Cam, Air Latches = 2, Sill Extender, Head Expander, Screen Coverage = Half, Fiberglass, Extruded, U-Factor = 0.32, SHGC = 0.3, VT = 0.53, STC = 0, CPD Number = SBP-A-112-08019-00001, Meets Energy Star Zones = None, DP = 35, AAMA, TDI = WIN-1601, Florida Approval Code = 5167 **RO:** 31.25 x 61.75 **Room ID:** Kitchen

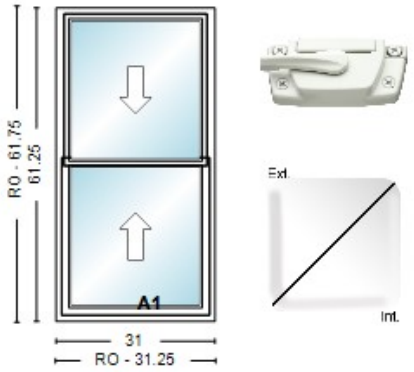

Initials: _____

PO NUMBER	QUOTE NAME	PROJECT NAME
54110570	TESFAYE	Unassigned

LineItem #	Qty.	Description
700-1	1	6100 Double Hung 31" X 61.25" Operation = Operating, Frame = Replacement Frame (2R), Ext. Color = White, Int. Color = White, Glass Package = Standard Glass Options, ProSolar Low E, Argon, Intercept, 3/4"IGU, Glass Thickness = 3/32 in - 3/32 out SS, Upper = Annealed, Lower = Annealed, Locks = 2, White, Cam, Air Latches = 2, Sill Extender, Head Expander, Screen Coverage = Half, Fiberglass, Extruded, U-Factor = 0.32, SHGC = 0.3, VT = 0.53, STC = 0, CPD Number = SBP-A-112-08019-00001, Meets Energy Star Zones = None, DP = 35, AAMA, TDI = WIN-1601, Florida Approval Code = 5167

RO:
31.25 x 61.75
Room ID:
Kitchen

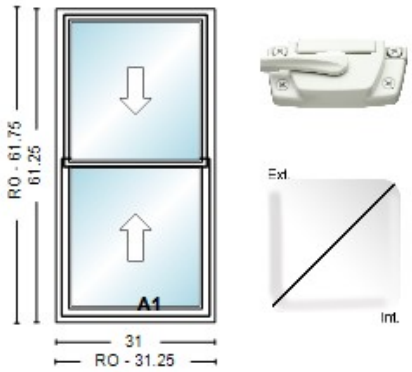

Initials: _____

LineItem #	Qty.	Description
800-1	1	6100 Double Hung 31" X 61.25" Operation = Operating, Frame = Replacement Frame (2R), Ext. Color = White, Int. Color = White, Glass Package = Standard Glass Options, ProSolar Low E, Argon, Intercept, 3/4"IGU, Glass Thickness = 3/32 in - 3/32 out SS, Upper = Annealed, Lower = Annealed, Locks = 2, White, Cam, Air Latches = 2, Sill Extender, Head Expander, Screen Coverage = Half, Fiberglass, Extruded, U-Factor = 0.32, SHGC = 0.3, VT = 0.53, STC = 0, CPD Number = SBP-A-112-08019-00001, Meets Energy Star Zones = None, DP = 35, AAMA, TDI = WIN-1601, Florida Approval Code = 5167

RO:
31.25 x 61.75
Room ID:
Kitchen

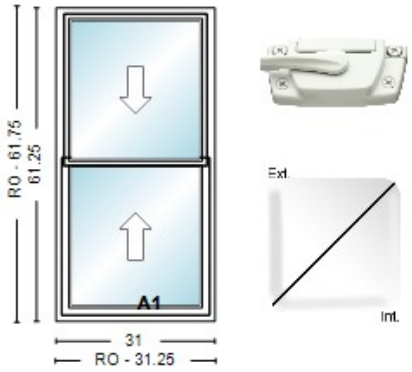

Initials: _____

PO NUMBER	QUOTE NAME	PROJECT NAME
54110570	TESFAYE	Unassigned

LineItem #	Qty.	Description
900-1	1	6100 Double Hung 31" X 61.25" Operation = Operating, Frame = Replacement Frame (2R), Ext. Color = White, Int. Color = White, Glass Package = Standard Glass Options, ProSolar Low E, Argon, Intercept, 3/4"IGU, Glass Thickness = 3/32 in - 3/32 out SS, Upper = Annealed, Lower = Annealed, Locks = 2, White, Cam, Air Latches = 2, Sill Extender, Head Expander, Screen Coverage = Half, Fiberglass, Extruded, U-Factor = 0.32, SHGC = 0.3, VT = 0.53, STC = 0, CPD Number = SBP-A-112-08019-00001, Meets Energy Star Zones = None, DP = 35, AAMA, TDI = WIN-1601, Florida Approval Code = 5167
RO: 31.25 x 61.75 **Room ID:** Kitchen		

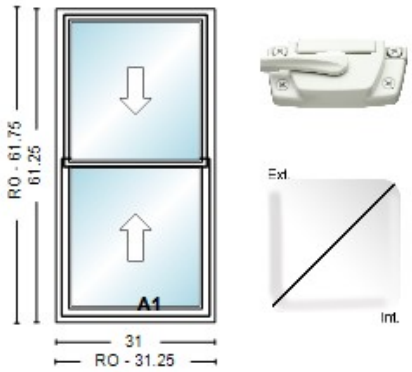

Initials: _____

LineItem #	Qty.	Description
1000-1	1	6100 Double Hung 31" X 61.25" Operation = Operating, Frame = Replacement Frame (2R), Ext. Color = White, Int. Color = White, Glass Package = Standard Glass Options, ProSolar Low E, Argon, Intercept, 3/4"IGU, Glass Thickness = 3/32 in - 3/32 out SS, Upper = Annealed, Lower = Annealed, Locks = 2, White, Cam, Air Latches = 2, Sill Extender, Head Expander, Screen Coverage = Half, Fiberglass, Extruded, U-Factor = 0.32, SHGC = 0.3, VT = 0.53, STC = 0, CPD Number = SBP-A-112-08019-00001, Meets Energy Star Zones = None, DP = 35, AAMA, TDI = WIN-1601, Florida Approval Code = 5167
RO: 31.25 x 61.75 **Room ID:** Kitchen		

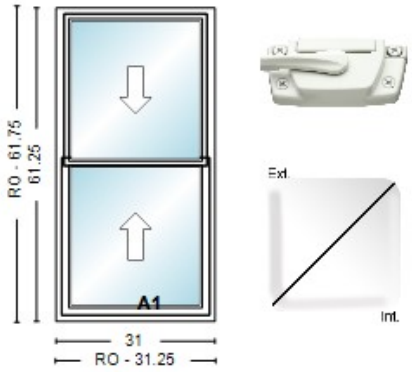

Initials: _____

PO NUMBER	QUOTE NAME	PROJECT NAME
54110570	TESFAYE	Unassigned

LineItem #	Qty.	Description
1100-1	1	6100 Double Hung 31" X 41.25" Operation = Operating, Frame = Replacement Frame (2R), Ext. Color = White, Int. Color = White, Glass Package = Standard Glass Options, ProSolar Low E, Argon, Intercept, 3/4"IGU, Glass Thickness = 3/32 in - 3/32 out SS, Upper = Annealed, Lower = Annealed, Locks = 2, White, Cam, Air Latches = 2, Sill Extender, Head Expander, Screen Coverage = Half, Fiberglass, Extruded, U-Factor = 0.32, SHGC = 0.3, VT = 0.53, STC = 0, CPD Number = SBP-A-112-08019-00001, Meets Energy Star Zones = None, DP = 35, AAMA, TDI = WIN-1601, Florida Approval Code = 5167

RO:
31.25 x 41.75
Room ID:
Living Room

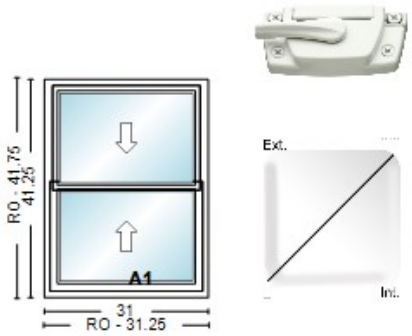

Initials: _____

LineItem #	Qty.	Description
1200-1	1	6100 Double Hung 31" X 41.25" Operation = Operating, Frame = Replacement Frame (2R), Ext. Color = White, Int. Color = White, Glass Package = Standard Glass Options, ProSolar Low E, Argon, Intercept, 3/4"IGU, Glass Thickness = 3/32 in - 3/32 out SS, Upper = Annealed, Lower = Annealed, Locks = 2, White, Cam, Air Latches = 2, Sill Extender, Head Expander, Screen Coverage = Half, Fiberglass, Extruded, U-Factor = 0.32, SHGC = 0.3, VT = 0.53, STC = 0, CPD Number = SBP-A-112-08019-00001, Meets Energy Star Zones = None, DP = 35, AAMA, TDI = WIN-1601, Florida Approval Code = 5167

RO:
31.25 x 41.75
Room ID:
Living Room

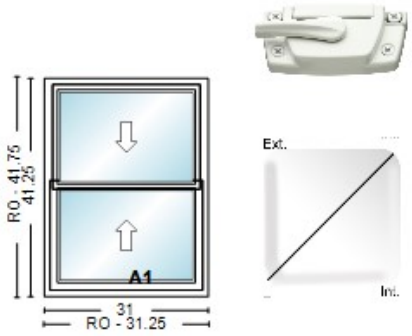

Initials: _____

PO NUMBER	QUOTE NAME	PROJECT NAME
54110570	TESFAYE	Unassigned

LineItem #	Qty.	Description
1300-1	1	6100 Double Hung 31" X 61.25" Operation = Operating, Frame = Replacement Frame (2R), Ext. Color = White, Int. Color = White, Glass Package = Standard Glass Options, ProSolar Low E, Argon, Intercept, 3/4"IGU, Glass Thickness = 3/32 in - 3/32 out SS, Upper = Annealed, Lower = Annealed, Locks = 2, White, Cam, Air Latches = 2, Sill Extender, Head Expander, Screen Coverage = Half, Fiberglass, Extruded, U-Factor = 0.32, SHGC = 0.3, VT = 0.53, STC = 0, CPD Number = SBP-A-112-08019-00001, Meets Energy Star Zones = None, DP = 35, AAMA, TDI = WIN-1601, Florida Approval Code = 5167

RO:
31.25 x 61.75
Room ID:
Living Room

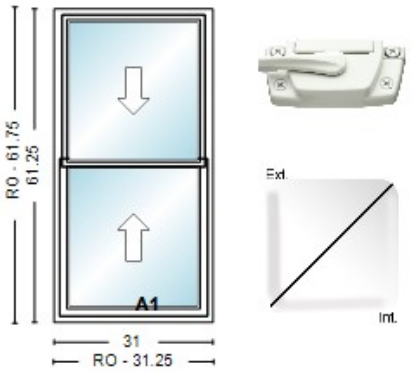

Initials: _____

LineItem #	Qty.	Description
1400-1	1	6100 Double Hung 31" X 61.25" Operation = Operating, Frame = Replacement Frame (2R), Ext. Color = White, Int. Color = White, Glass Package = Standard Glass Options, ProSolar Low E, Argon, Intercept, 3/4"IGU, Glass Thickness = 3/32 in - 3/32 out SS, Upper = Annealed, Lower = Annealed, Locks = 2, White, Cam, Air Latches = 2, Sill Extender, Head Expander, Screen Coverage = Half, Fiberglass, Extruded, U-Factor = 0.32, SHGC = 0.3, VT = 0.53, STC = 0, CPD Number = SBP-A-112-08019-00001, Meets Energy Star Zones = None, DP = 35, AAMA, TDI = WIN-1601, Florida Approval Code = 5167

RO:
31.25 x 61.75
Room ID:
Living Room

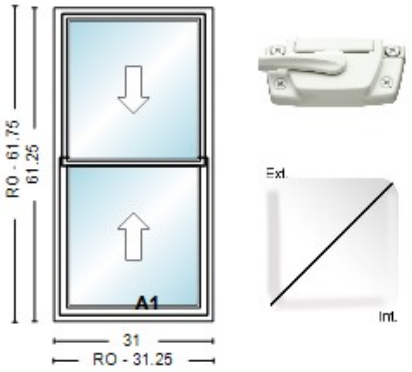

Initials: _____

PO NUMBER	QUOTE NAME	PROJECT NAME
54110570	TESFAYE	Unassigned

LineItem #	Qty.	Description
1500-1	1	6100 Double Hung 31" X 61.25" Operation = Operating, Frame = Replacement Frame (2R), Ext. Color = White, Int. Color = White, Glass Package = Standard Glass Options, ProSolar Low E, Argon, Intercept, 3/4"IGU, Glass Thickness = 3/32 in - 3/32 out SS, Upper = Annealed, Lower = Annealed, Locks = 2, White, Cam, Air Latches = 2, Sill Extender, Head Expander, Screen Coverage = Half, Fiberglass, Extruded, U-Factor = 0.32, SHGC = 0.3, VT = 0.53, STC = 0, CPD Number = SBP-A-112-08019-00001, Meets Energy Star Zones = None, DP = 35, AAMA, TDI = WIN-1601, Florida Approval Code = 5167

RO:
31.25 x 61.75
Room ID:
Living Room

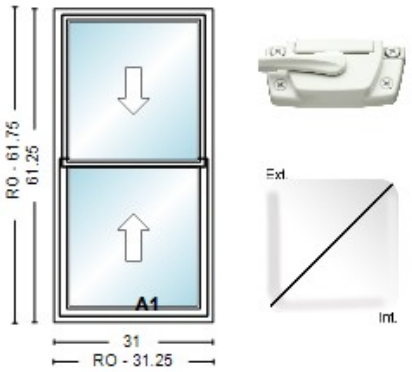

Initials: _____

LineItem #	Qty.	Description
1600-1	1	6100 Double Hung 31" X 61.25" Operation = Operating, Frame = Replacement Frame (2R), Ext. Color = White, Int. Color = White, Glass Package = Standard Glass Options, ProSolar Low E, Argon, Intercept, 3/4"IGU, Glass Thickness = 3/32 in - 3/32 out SS, Upper = Annealed, Lower = Annealed, Locks = 2, White, Cam, Air Latches = 2, Sill Extender, Head Expander, Screen Coverage = Half, Fiberglass, Extruded, U-Factor = 0.32, SHGC = 0.3, VT = 0.53, STC = 0, CPD Number = SBP-A-112-08019-00001, Meets Energy Star Zones = None, DP = 35, AAMA, TDI = WIN-1601, Florida Approval Code = 5167

RO:
31.25 x 61.75
Room ID:
Living Room

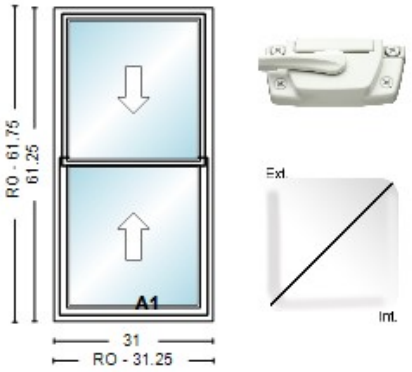

Initials: _____

PO NUMBER	QUOTE NAME	PROJECT NAME
54110570	TESFAYE	Unassigned

LineItem #	Qty.	Description
1700-1	1	6100 Double Hung 47.5" X 60.75" Operation = Operating, Frame = Replacement Frame (2R), Ext. Color = White, Int. Color = White, Glass Package = Standard Glass Options, ProSolar Low E, Argon, Intercept, 3/4"IGU, Glass Thickness = 3/32 in - 3/32 out SS, Upper = Annealed, Lower = Annealed, Locks = 2, White, Cam, Air Latches = 2, Sill Extender, Head Expander, Screen Coverage = Half, Fiberglass, Extruded, U-Factor = 0.32, SHGC = 0.3, VT = 0.53, STC = 0, CPD Number = SBP-A-112-08019-00001, Meets Energy Star Zones = None, DP = 35, AAMA, TDI = WIN-1601, Florida Approval Code = 5167

RO:
47.75 x 61.25
Room ID:
Porch

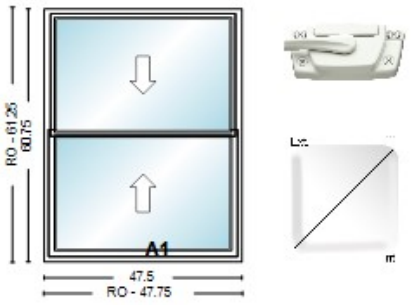

Initials: _____

LineItem #	Qty.	Description
1800-1	1	6100 Double Hung 47.5" X 61" Operation = Operating, Frame = Replacement Frame (2R), Ext. Color = White, Int. Color = White, Glass Package = Standard Glass Options, ProSolar Low E, Argon, Intercept, 3/4"IGU, Glass Thickness = 3/32 in - 3/32 out SS, Upper = Annealed, Lower = Annealed, Locks = 2, White, Cam, Air Latches = 2, Sill Extender, Head Expander, Screen Coverage = Half, Fiberglass, Extruded, U-Factor = 0.32, SHGC = 0.3, VT = 0.53, STC = 0, CPD Number = SBP-A-112-08019-00001, Meets Energy Star Zones = None, DP = 35, AAMA, TDI = WIN-1601, Florida Approval Code = 5167

RO:
47.75 x 61.5
Room ID:
Porch

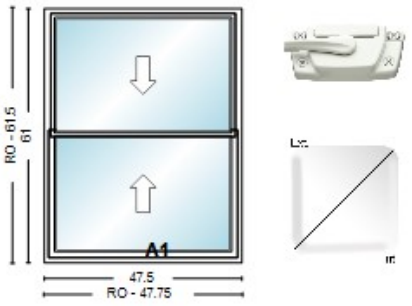

Initials: _____

PO NUMBER	QUOTE NAME	PROJECT NAME
54110570	TESFAYE	Unassigned

LineItem #	Qty.	Description
1900-1	1	6100 Double Hung 31" X 54.25" Operation = Operating, Frame = Replacement Frame (2R), Ext. Color = White, Int. Color = White, Glass Package = Standard Glass Options, ProSolar Low E, Argon, Intercept, 3/4"IGU, Glass Thickness = 1/8 in - 1/8 out DS, Upper = Annealed, Obscure Upper, Lower = Tempered, Obscure Lower, Locks = 2, White, Cam, Air Latches = 2, Sill Extender, Head Expander, Screen Coverage = Half, Fiberglass, Extruded, U-Factor = 0.32, SHGC = 0.29, VT = 0.53, STC = 0, CPD Number = SBP-A-112-08020-00001, Meets Energy Star Zones = None, DP = 35, AAMA, TDI = WIN-1601, Florida Approval Code = 5167

RO:
31.25 x 54.75
Room ID:
Bathroom

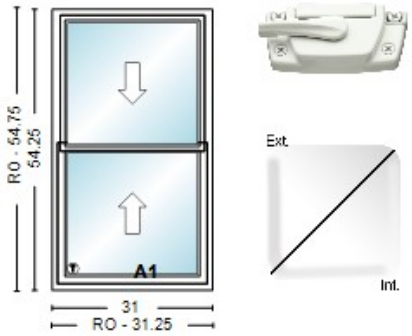

Initials: _____

LineItem #	Qty.	Description
2000-1	1	6100 Double Hung 31" X 61.25" Operation = Operating, Frame = Replacement Frame (2R), Ext. Color = White, Int. Color = White, Glass Package = Standard Glass Options, ProSolar Low E, Argon, Intercept, 3/4"IGU, Glass Thickness = 3/32 in - 3/32 out SS, Upper = Annealed, Lower = Annealed, Locks = 2, White, Cam, Air Latches = 2, Sill Extender, Head Expander, Screen Coverage = Half, Fiberglass, Extruded, U-Factor = 0.32, SHGC = 0.3, VT = 0.53, STC = 0, CPD Number = SBP-A-112-08019-00001, Meets Energy Star Zones = None, DP = 35, AAMA, TDI = WIN-1601, Florida Approval Code = 5167

RO:
31.25 x 61.75
Room ID:
Kitchen

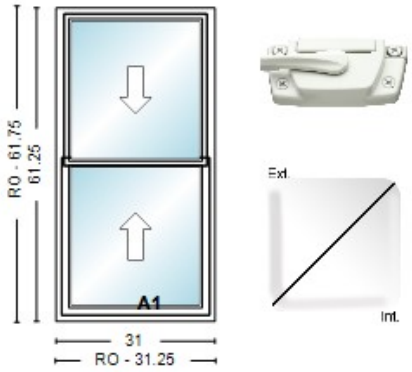

Initials: _____

PO NUMBER	QUOTE NAME	PROJECT NAME
54110570	TESFAYE	Unassigned

LineItem #	Qty.	Description
2100-1	1	6100 Double Hung 31" X 61.25" Operation = Operating, Frame = Replacement Frame (2R), Ext. Color = White, Int. Color = White, Glass Package = Standard Glass Options, ProSolar Low E, Argon, Intercept, 3/4"IGU, Glass Thickness = 3/32 in - 3/32 out SS, Upper = Annealed, Lower = Annealed, Locks = 2, White, Cam, Air Latches = 2, Sill Extender, Head Expander, Screen Coverage = Half, Fiberglass, Extruded, U-Factor = 0.32, SHGC = 0.3, VT = 0.53, STC = 0, CPD Number = SBP-A-112-08019-00001, Meets Energy Star Zones = None, DP = 35, AAMA, TDI = WIN-1601, Florida Approval Code = 5167

RO:
31.25 x 61.75
Room ID:
Kitchen

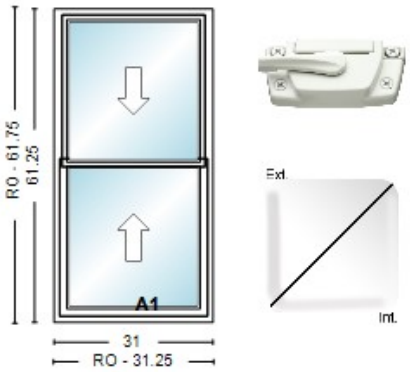

Initials: _____

LineItem #	Qty.	Description
2200-1	21	WOCDW WOCD Kit w/2devices (SX20176);WH

Initials: _____

21 Total Qty Units

SUB-TOTAL:	$4,895.70
TOTAL TAX:	$0.00
TOTAL LABOR:	$0.00
TOTAL FREIGHT:	$0.00
DIST/DLR DISC:	$0.00
TOTAL:	$4,895.70
DEPOSIT PAID:	($0.00)
AMOUNT DUE:	$4895.70

Comment:

Submitted by: _____ **Accepted by:** _____ **Date**_____

Simonton 6100 Double Hung Window

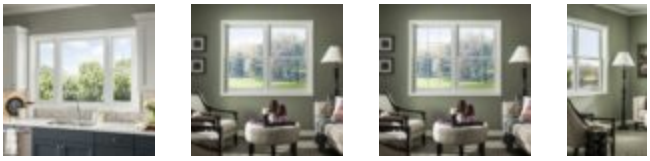

Simonton 6100 Double Hung Window

Fusion-welded framing provides increased strength, while a streamlined, narrow frame provides a larger viewing area. Designed with unique features, the Simonton 6100 double hung window will enhance and beautify your home.

- Overlapping and interlocking meeting rail seals tightly to inhibit air and water infiltration
- Unique sill design forces water away from your home
- Lift rail molded into the sash for greater stability
- Tilt-in sash for easy cleaning
- Easy-glide sash for smooth operation

- A narrow frame increases the viewing area and allows more sunlight inside

Exterior Colors

Interior Colors

Hardware Finishes

Grille Styles

Flat

Sculptured

Share

Availability limited in some areas.
Use zip code search

SCHEDULE NOW

Description Features Options Colors

Simonton 6100 Series Overview

The Simonton 6100 Series offers a modern look with complementary styles, colors and energy-efficient options that take any home remodel to the next level.

- A narrow frame design that provides exceptional viewing space and daylight
- Low E/Argon-filled glass and the Intercept spacer are standard

- Choose from white and tan, as well as a host of glass and grille options
- Several window styles are available, along with a complementary narrow frame patio door

All features and options not available on all styles.

Lifetime Limited Warranty

We know buying windows is a big investment. An investment you want to be protected. That's why we back all Simonton 6100 windows with a comprehensive warranty covering vinyl, hardware, screens, and insulating glass units.

ENERGY STAR

Simonton 6000 windows and doors available exclusively through The Home Depot can be ordered to meet ENERGY STAR guidelines for any region of the country. So, no matter where you live, you can get energy-efficient windows and patio doors. All of which helps reduce your heating and cooling costs and meet guidelines set by the EPA and US Department of Energy.

Find your Series

Our windows and doors make the perfect fit, every time for every home. Start here when you sort by series or style.

Get Inspired

See our windows and doors in their element. Be inspired by Simonton windows and doors in our Gallery.

What is your Simonton style?

WINDOWS & DOORS

INSPIRATION & PLANNING

THE HOME DEPOT DIFFERENCE

SUPPORT

With different types of windows and an array of custom options, it's hard to tell where your fit will be. Take the Simonton quiz to find out which series and style best suits you.

Quiz

Customer Stories

Gallery

Product Care

Why Simonton?

How to Shop for Windows & Doors

Warranty

DO NOT SELL OR SHARE MY PERSONAL INFORMATION

Ply Gem®, Simonton® and the stylized "P" are trademarks of Ply Gem Industries, Inc. or its affiliates. The Home Depot is a trademark of Home Depot Product Authority, LLC or its affiliates. ©2018 Simonton Building Products, LLC

*Corrosion-resistant refers to use in normal weather conditions without excess salt and debris in the atmosphere. Corrosion of rollers may occur in coastal applications or in areas with extreme fluctuations in weather patterns.

Ply Gem

SIMONTON

WINDOWS & DOORS

Why Simonton?

When you choose Simonton branded windows and doors, you are also choosing Ply Gem, a trusted leader in building products for 75 years.

Arsenault, Caleb - PDCM

From: Arsenault, Caleb - PDCM
Sent: Monday, October 13, 2025 2:22 PM
To: 'Jon Thomas'
Cc: Sirvent, James R; Dyer, David J; Allen, Adam; HILLSTREETINC@GMAIL.COM
Subject: RE: COJ Historic Preservation for 2652 Dellwood Avenue

Good afternoon,

I am reaching out as I prepare our report for this application for next week's meeting. Our recommendation is to repair the existing windows rather than replace them. If you have any evidence that you would like us to include in our book package to the Commission that the existing windows are beyond repair, then please submit it to this email. This can include a WDO Report or any supplemental information that you believe the Commission may want to consider.

Best regards,

Caleb Arsenault, MHP
City Planner I
Historic Preservation Section | Planning Department
214 North Hogan Street, Suite 300
Jacksonville, FL 32202
Office: **904–255–7854**

From: Jon Thomas <jon.thomas@expeditepermit.com>
Sent: Tuesday, September 23, 2025 10:24 AM
To: Arsenault, Caleb - PDCM <CArsenault@coj.net>
Cc: Sirvent, James R <JAMES_R_SIRVENT@homedepot.com>; Dyer, David J <David_J_Dyer@homedepot.com>; Allen, Adam <ADAM_ALLEN@homedepot.com>; HILLSTREETINC@GMAIL.COM
Subject: Re: COJ Historic Preservation for 2652 Dellwood Avenue

EXTERNAL EMAIL: This email originated from a non-COJ email address. Do not click any links or open any attachments unless you trust the sender and know the content is safe.

Thank you!

Thank You,

Jon Thomas

Office Manager - Clermont Branch

Team K5 Construction & Development Coordination, LLC
176 E Highland Ave
Clermont, FL 34711

Office - 407-378-6682
Fax - 407-768-3357
Email - Jon.Thomas@expeditepermit.com

On Tue, Sep 23, 2025 at 10:18 AM Arsenault, Caleb - PDCM <CArsenault@coj.net> wrote:

> Good morning,
>
> Received, thank you. I will begin preparing our report.
>
> Best regards,
>
> **Caleb Arsenault, MHP**
>
> City Planner I
>
> Historic Preservation Section | Planning Department
>
> 214 North Hogan Street, Suite 300
>
> Jacksonville, FL 32202
>
> Office: **904–255–7854**
>
> **From:** Jon Thomas <jon.thomas@expeditepermit.com>
> **Sent:** Tuesday, September 23, 2025 7:54 AM
> **To:** Arsenault, Caleb - PDCM <CArsenault@coj.net>
> **Cc:** Sirvent, James R <JAMES_R_SIRVENT@homedepot.com>; Dyer, David J <David_J_Dyer@homedepot.com>; Allen, Adam <ADAM_ALLEN@homedepot.com>; HILLSTREETINC@GMAIL.COM
> **Subject:** Re: COJ Historic Preservation for 2652 Dellwood Avenue

EXTERNAL EMAIL: This email originated from a non-COJ email address. Do not click any links or open any attachments unless you trust the sender and know the content is safe.

Here you go.

Thank You,

Jon Thomas

Office Manager - Clermont Branch

Team K5 Construction & Development Coordination, LLC
176 E Highland Ave
Clermont, FL 34711

Office - 407-378-6682
Fax - 407-768-3357
Email - Jon.Thomas@expeditepermit.com

On Mon, Sep 22, 2025 at 2:52 PM Arsenault, Caleb - PDCM <CArsenault@coj.net> wrote:

Good afternoon,

I am confirming receipt of the affidavit and the paid invoice. Please send a picture(s) of the posted sign(s) in the yard of the subject property to accompany the affidavit.

Best regards,

Caleb Arsenault, MHP

City Planner I

Historic Preservation Section | Planning Department

214 North Hogan Street, Suite 300

Jacksonville, FL 32202

Office: **904–255–7854**

From: Jon Thomas <jon.thomas@expeditepermit.com>
Sent: Monday, September 22, 2025 2:44 PM
To: Arsenault, Caleb - PDCM <CArsenault@coj.net>
Cc: Sirvent, James R <JAMES_R_SIRVENT@homedepot.com>; Dyer, David J <David_J_Dyer@homedepot.com>; Allen, Adam <ADAM_ALLEN@homedepot.com>; HILLSTREETINC@GMAIL.COM
Subject: Re: COJ Historic Preservation for 2652 Dellwood Avenue

EXTERNAL EMAIL: This email originated from a non-COJ email address. Do not click any links or open any attachments unless you trust the sender and know the content is safe.

Hi Caleb,

Attached is the receipt for payment of the fee and the sign posting affidavit.

The sign was posted 9/19/2025

Thanks!

Thank You,

Jon Thomas

Office Manager - Clermont Branch

Team K5 Construction & Development Coordination, LLC
176 E Highland Ave
Clermont, FL 34711

Office - 407-378-6682
Fax - 407-768-3357
Email - Jon.Thomas@expeditepermit.com

On Tue, Sep 16, 2025 at 1:31 PM Jon Thomas <jon.thomas@expeditepermit.com> wrote:

> I will get my runner up there this week to pay this fee and get the signs posted.
>
> Thanks!
>
> ***Thank You,***
>
> ***Jon Thomas***
>
> ***Office Manager - Clermont Branch***
>
> *Team K5 Construction & Development Coordination, LLC*
> *176 E Highland Ave*
> *Clermont, FL 34711*
>
> ***Office - 407-378-6682***
> ***Fax - 407-768-3357***
> ***Email -*** Jon.Thomas@expeditepermit.com

On Tue, Sep 16, 2025 at 1:10 PM Arsenault, Caleb - PDCM <CArsenault@coj.net> wrote:

Good afternoon,

Please be advised that **Application for Certificate of Appropriateness (COA-25-32942)** is now ready for payment. In order to submit the necessary materials for filing, please complete the following items:

- Attached is the invoice. The check(s) should be made out to the Tax Collector and can be paid at the Tax Collector's Office (**214 N. Hogan Street, 2nd Floor**).
- Please return a copy of the paid invoice to me via email or to the Historic Preservation Section (**214 N. Hogan Street, 3rd Floor**).
- The required public notice signs (**1, along all streets the property fronts)** and affidavit are also ready for pick-up. The signs are located outside the elevators on the 3rd floor in the Ed Ball building (214 N. Hogan St). The signs will need to be posted by **October 8th**.

So long as we receive the receipt of payment by **September 26th,** your application can be scheduled for the Jacksonville Historic Preservation Commission (JHPC) meeting on **October 22nd, 2025.**

Best regards,

Caleb Arsenault, MHP

City Planner I

Historic Preservation Section | Planning Department

214 North Hogan Street, Suite 300

Jacksonville, FL 32202

Office: **904–255–7854**

From: Jon Thomas <jon.thomas@expeditepermit.com>
Sent: Friday, September 12, 2025 3:00 PM
To: Arsenault, Caleb - PDCM <CArsenault@coj.net>; Sirvent, James R <JAMES_R_SIRVENT@homedepot.com>; Dyer, David J <David_J_Dyer@homedepot.com>; Allen, Adam <ADAM_ALLEN@homedepot.com>
Cc: HILLSTREETINC@GMAIL.COM
Subject: Re: COJ Historic Preservation for 2652 Dellwood Avenue

EXTERNAL EMAIL: This email originated from a non-COJ email address. Do not click any links or open any attachments unless you trust the sender and know the content is safe.

Hi Caleb,

I've attached the letter as requested showing I am the agent of Team K5 for application.

Can we please have this go before the commission for approval?

Thank You,

Jon Thomas

Office Manager - Clermont Branch

Team K5 Construction & Development Coordination, LLC
176 E Highland Ave
Clermont, FL 34711

Office - 407-378-6682
Fax - 407-768-3357
Email - Jon.Thomas@expeditepermit.com

On Fri, Sep 12, 2025 at 2:44 PM Arsenault, Caleb - PDCM <CArsenault@coj.net> wrote:

Good afternoon,

I have been assigned to review your application for a **Certificate of Appropriateness (COA)**. To continue processing your application, please address the following:

- The provided applicant name does not appear to be listed as a registered agent of Team K5. Please provide proof that the applicant works for the subject company or I can provide an agent authorization form for the owner to complete that will designate the applicant as their agent.
- We do not have any record of previous attempts to repair or replacement of the windows at this property. After reviewing the provided pictures, we do not have sufficient evidence to prove that the nineteen (19) historic wood windows proposed to be replaced are beyond repair. While we can recommend replacement of the two previously replaced metal windows identified as #17 and #18 with a compatible product, the replacement of the wood windows will require review by the **Jacksonville Preservation Commission (JHPC)**. Commission meetings take place monthly and have associated fees and signage to be posted on the properties. Please also keep in mind that when deemed beyond repair, we can only recommend the replacement of historic wood windows with wood, wood-blend, or wood-clad products. As such the proposed vinyl would not be a recommended replacement product. An additional note for vinyl windows is that they must be recessed within the wall openings (not flush with the exterior wall) with no permanent exterior nailing fins. Our recommendation would be to repair the subject wood windows and to replace the two metal windows with compatible products.

Please advise how you would like to proceed.

Best regards,

Caleb Arsenault, MHP

City Planner I

Historic Preservation Section | Planning Department

214 North Hogan Street, Suite 300

Jacksonville, FL 32202

Office: **904–255–7854**

RECORD NUMBER: 894
Page 1 **HISTORICAL STRUCTURE FORM** **Site 8** _____
X **original** **FLORIDA MASTER SITE FILE**
update

SITE NAME: 2652-54 Dellwood Avenue
HISTORIC CONTEXTS: Boom Times
NAT. REGISTER CATEGORY: Building
OTHER NAMES OR MSF NOS:
COUNTY: Duval **OWNERSHIP TYPE:** Private, individual
PROJECT NAME: Resurvey of Riverside: S+P **DHR NO.**
LOCATION:
ADDRESS: 2652-54 Dellwood Avenue
CITY: Jacksonville
VICINITY OF/ROUTE TO: See Attached Maps

SUB: Riverside Park Place Terrace **BLOCK** **LOT** 18
PLAT OR OTHER MAP: Duval County Property Appraiser Map
TOWNSHIP: 2 S **RANGE:** 26 E **SECTION:** 22 **1/4:** **1/4-1/4:**
IRREGULAR SEC? **y** X **n** **LAND GRANT:** NONE
USGS 7.5 MAP: Jacksonville, 1964: PR 1982
UTM: ZONE: **EASTING:** **NORTHING:**
COORDINATES: LATITUDE: D M S LONGITUDE: D M S

HISTORY
ARCHITECT: Unknown
BUILDER: Unknown
CONSTRUCTION DATE: c. 1929**RESTORATION DATE(S):**
MODIFICATION DATE(S):
MOVE: DATE: **ORIG. LOCATION:**
ORIGINAL USE (S): Apartment
PRESENT USE (S): Apartment

DESCRIPTION
STYLE: Masonry Vernacular
PLAN: EXTERIOR: Irregular
PLAN: INTERIOR: Unknown
NO. STORIES: 2 **OUTBLDGS:** 1 **PORCHES:** 0 **DORMERS:** 0
STRUCTURAL SYSTEM(S): Wood, balloon
EXTERIOR FABRIC(S): Brick
FOUNDATION: TYPE: Continuous
MATERIALS: Brick
INFILL:
PORCHES:
ROOF: TYPE: Hip
SURFACING: Composition shingle
SECONDARY STRUCS:
CHIMNEY: NO.: 1
MATERIALS: Brick
LOCATIONS: E: end, exterior
WINDOWS: Double-hung sash, 1/1 lights; jalousie

EXTERIOR ORNAMENT:
CONDITION: Fair
SURROUNDINGS: Residential
NARRATIVE:
See Continuation Sheet

ARCHAEOLOGICAL REMAINS AT THE SITE
FMSF ARCHAEOLOGICAL FORM COMPLETED? y X n
ARTIFACTS OR OTHER REMAINS: None observed

RECORDER'S EVALUATION OF SITE
AREAS OF SIGNIFICANCE: Architecture

ELIGIBLE FOR NAT. REGISTER?		**y**	X	**n**	**likely, need info**	**insf info**
SIGNIF. AS PART OF DISTRICT?	X	**y**		**n**	**likely, need info**	**insf info**
SIGNIFICANT AT LOCAL LEVEL?	X	**y**		**n**	**likely, need info**	**insf info**

SUMMARY OF SIGNIFICANCE
See Continuation Sheet

* * * * DHR USE ONLY * * * * * * * DHR USE ONLY * * * * * *
* DATE LISTED ON NR _____ *
* KEEPER DETERMINATION OF ELIG.(DATE): _YES _____ _NO _____ *
* SHPO EVALUATION OF ELIGIBILITY (DATE): _YES _____ _NO _____ *
* LOCAL DETERMINATION OF ELIG. (DATE): _YES _____ _NO _____ *
* OFFICE_____ *
* *
* * * * DHR USE ONLY * * * * * * * DHR USE ONLY * * * * * *

RECORDER INFORMATION: NAME: Stephen Olausen
DATE: 09/01/91 **AFFILIATION:** Historic Property Associates, Inc.

PHOTOGRAPHS
LOCATION OF NEGATIVES: HPA, Inc., St. Augustine, FL
NEGATIVE NUMBERS: Roll 26, #20

PHOTOGRAPH M A P

See Attachments

STATEMENT OF SIGNIFICANCE

Architectural Narrative: This two-story Masonry Vernacular residential building is located at 2652-54 Dellwood Avenue. Notable architectural features include a hip roof, a projecting hip extension, boxed cornice, and a pair of offset entrances. Each entrance has a cast stone surround. The exterior wall fabric is brick. Fenestration consists of 1/1 double-hung sash windows, and jalousie windows. Alterations consist of the jalousie windows which have replaced the original wood frame window fabric.

Architectural Context: Masonry Vernacular is defined as the common masonry construction techniques of lay or self taught builders. Prior to the Civil War vernacular designs were local in nature, transmitted by word of mouth or by demonstration, and relying heavily upon native building materials. With the coming of the American Industrial Revolution mass manufacturers became the pervasive influence over vernacular house design. Popular magazines featuring standardized manufactured building components, house plans, and house decorating tips flooded consumer markets and helped to make building trends universal throughout the country. The railroad also aided the process by providing cheap and efficient transportation for manufactured building materials. Ultimately, the individual builder had access to a myriad of finished architectural products from which he could pick and choose to create a design of his own.

Masonry Vernacular is more commonly associated with commercial building types than with residential architecture where wood frame houses dominate. In Florida, most examples predating 1920 were brick, but a number of older examples feature the rough-faced cast concrete block popularized by Henry Hobson Richardson in his Romanesque buildings of the late 19th century. The Masonry Vernacular designs of the 1920's and 1930's were often influenced by popular Spanish designs of the period. The main masonry building materials during the period were hollow tile and concrete block. Since World War II concrete block construction has been widely used in Florida's residential suburbs.

Historical Narrative: Located in the Riverside Park Place Terrace subdivision, which was platted by Frank E. and Nellie K. Wood in 1929, this building embodies many of the architectural characteristics of residences constructed in Riverside during the Florida land boom of the 1920s. Evidence compiled from the recording date of the subdivision indicate that the building was constructed about 1929.

Historical Context: Located southwest of downtown Jacksonville, Riverside is one of the city's oldest and most historically significant residential neighborhoods. The area that became Riverside was originally part of two Spanish land grants issued in 1801 and 1815 to Philip Dell and Robert Hutcheson, respectively. Together, the two tracts totalled 950 acres, an area nearly twice the size of present-day Riverside. The land changed hands frequently until 1847, when it was deeded to James Winter who operated a large plantation there. In 1869, Edward M. Cheney, editor of *The Florida Union* newspaper, purchased 500 acres of an area known as Dell's Bluff for John Murray Forbes, a Boston millionaire. Forbes had the land surveyed and platted, and named the area Riverside for its location along the shore of the St. Johns River.

The Riverside tract remained largely undeveloped until 1887, when the eastern portion of the area to present-day King Street was incorporated into the city of Jacksonville. Shortly after annexation, a street car line was extended to connect the suburb with downtown. The extension of city services and the streetcar line sparked Riverside's first significant period of development. By 1895, Riverside was home to 2,500 of Jacksonville's upper middle class.

The architecture of Riverside reflects diverse stylistic trends popular during the late nineteenth and early twentieth centuries, when the community experienced most of its development. Following the Great Fire of 1901, many former residents of downtown neighborhoods built homes in Riverside. Riverside Avenue, the primary road to the area from downtown, became the showplace for homes of many prominent residents and was thus nicknamed "The Row." In the wake of the Great Fire, Jacksonville attracted a number of architects, many of who, in addition to rebuilding the downtown commercial core, competed for residential commissions in Riverside. The variety of styles employed by Riverside's architects give the area the distinction of having one of the most diverse collections of historic residential architecture in Florida.

SITE MAP:
RIVERSIDE
SURVEY AREA

894. 2652-54 Dellwood Avenue

ADDRESS _____

H. Certificates of Appropriateness

Work Initiated or Completed without a COA

Jacksonville
Historic Preservation
Commission

I. Appeals of Administratively Approved COAs

Jacksonville
Historic Preservation
Commission

J. Minor Modifications

Jacksonville
Historic Preservation
Commission

MMA-25-32924

1310 Liberty St N

October 22, 2025

Report of the Jacksonville Planning and Development Department
Certificate of Appropriateness Application MMA-25-32924

Address: 1310 Liberty St N, RE# 070962-0000

Location: West side of Liberty Street North between 3rd Street East and 4th Street East

Applicant: Don Gullion
Dream Finders Homes LLC
14701 Philips Highway
Jacksonville, FL 32256-3742

Owner: *Same as Applicant*

Year Built: N/A

Designation: Springfield

Request: Alteration to Window Design

Summary Scope of Work:

1. Modify window installation to have a board trim rather than recessed into the structure

Recommendation: **Deny**

PROJECT DESCRIPTION

MMA-25-32924 seeks the modification to the scope of work approved in COA-25-31703 for the new construction of a single-family home at 1310 Liberty Street North in the Springfield Historic District. The subject site is a rectangular-shaped interior lot on the west side of Liberty Street North between 3rd Street East and 4th Street East. The application's scope of work would involve the modification to the installation of the proposed windows to be flush with the exterior of the home and installing a board trim around the window openings to simulate a recessed window. The reason for this modification given by the applicant stems from a recalled discussion of water intrusion issues and a flanged window being approved for installation at the JHPC meeting held on June 25, 2025, for the referenced COA application. After reviewing the JHPC meeting minutes, the conditions were amended to reflect the removal of the shutters and maintain the trim shown in the elevation plans dated November 20, 2025. The approval of the installation of a flanged window was not part of the discussion. Additionally, the applicant has submitted photos of proposed window trims that could be added to the exterior of the windows for addressing the window violation. The signed Final Order from June 27, 2025 stated in Condition 11 that all windows shall be installed according to the latest

HPS Window Supplement, meaning that they shall be recessed in the window openings and not be flush with the exterior walls.

This report will focus on the modification to the scope of work for the window installation referenced in the previously approved application COA-25-31703. Staff shall note that this is considered after-the-fact work.

STAFF SUMMARY AND ANALYSIS

Staff considered the applicable Design Guidelines for the Historic District and the Ordinance Code criteria found in Sections 307.106(k) and 307.106(m). The following is Staff's analysis:

- The 1913 to 1951 Sanborn Map shows 1310 Liberty Street North having a one-story, single-family residential structure, which was demolished at some time during the mid-1970s as archived permits show a sewer disconnect permit filed in 1976. The lot has been vacant since with no property recorded during the 1985 survey of the Historic District. The current owner obtained the property in February 2025.
- Section 306.106(k)(1 and 2) outlines the general criteria that focus on the effect that certain changes made within the Historic District.
    - The proposed installation of windows stated in Condition #11 of the previously approved application **COA-24-31703**: "All windows shall be installed in accordance with the latest version of the HPS Window Supplement." This allowed for the proposed single-family residential structure to be consistent with Section 307.106(k)(1 and 2).
    - The proposed modification to the scope of work conflicts with the latest version of the HPS Window Supplement, making the new scope of work inconsistent with Section 307.106(k)(1 and 2). Proposing wood board trims in place of recessing windows are considered inappropriate replacement windows outlined within the HPS Window Supplement.
- The approved conditions for the proposed new construction of the two-story, single-family residence within **COA-24-31703** were consistent with the Springfield Historic District Design Guidelines and Ordinance Code in place that were consistent with Section 307.106(m)(2 and 8) for criteria regarding new construction and infill within the Historic District.
    - The window and door locations will remain the same, making the proposed changes still consistent with Section 307.106(m)(2). The light pattern on the door is consistent with the Door Design Guidelines. The light patterns on the windows are appropriate for the Historic District and complement the frame vernacular style structure.
    - The proposed changes to the window installation to be flush with the exterior, resulting in the windows to be inconsistent with the HPS Window Supplement, which requires windows to be recessed into the structures to complement the minimal architectural detailing of the frame vernacular structures within the district. This would make it inconsistent with Section 307.106(m)(8).

- The Historic Preservation Guidelines for the Springfield Historic District reference "New Construction" and "Windows/Awnings/Shutters along with Standard Nine of the Secretary of the Interior Standards for Rehabilitation:
    - Standard Nine refers to any related new construction being compatible with the massing, size, scale, and architectural features of the district to protect the historic integrity of its surrounding properties. The proposed new construction of the two-story, single-family residence is aligned with a frame vernacular that does not have many distinguishing architectural features to begin with, making the proposed changes to the window installation inconsistent with Standard Nine by making the windows flush with the exterior.

For these reasons, it is the position of the Planning and Development Department that the proposed changes to the scope of work are inconsistent with:

- Section 307.106(k) General Standards: 1 and 2
- Section 307.106(m) Guidelines on Alterations: 2 and 8
- Historic District Design Guidelines, Section on "Windows/Awnings/Shutters" and "New Construction"
- Latest HPS Window Supplement

CODE CRITERIA AND DESIGN GUIDELINES

General Criteria

- 307.106(k)(1) - The effect of the proposed work on the landmark, landmark site or property within an historic district upon which such work is to be done;

- 307.106(k)(2) - The relationship between such work and other structures on the landmark site or other property in the historic district;

New Construction

- 307.106(m)(2) – *Proportions of windows and doors.* The proportions and relationships between doors and windows shall be compatible with the architectural style and character of the landmark and with surrounding structures in an historic district.

- 307.106(m)(8) - *Architectural details.* Architectural details including materials and textures shall be treated so as to make a landmark compatible with its original architectural style and character and to preserve and enhance the architectural style or character of a landmark or historic district. The Commission will give recommendations as to appropriate colors for any landmark or historic district.

Historic District Design Guidelines, "New Construction" and "Windows/Awnings/Shutters"

- Secretary of the Interior's Standards for Rehabilitation (9): New additions, exterior alterations, or related new construction shall not destroy historic materials that

characterize the property. The new work shall be differentiated from the old and shall be compatible with the massing, size, scale, and architectural features to protect the historic integrity of the property and its environment.

LOCATION MAP

JACKSONVILLE SANBORN MAP SCREENSHOT

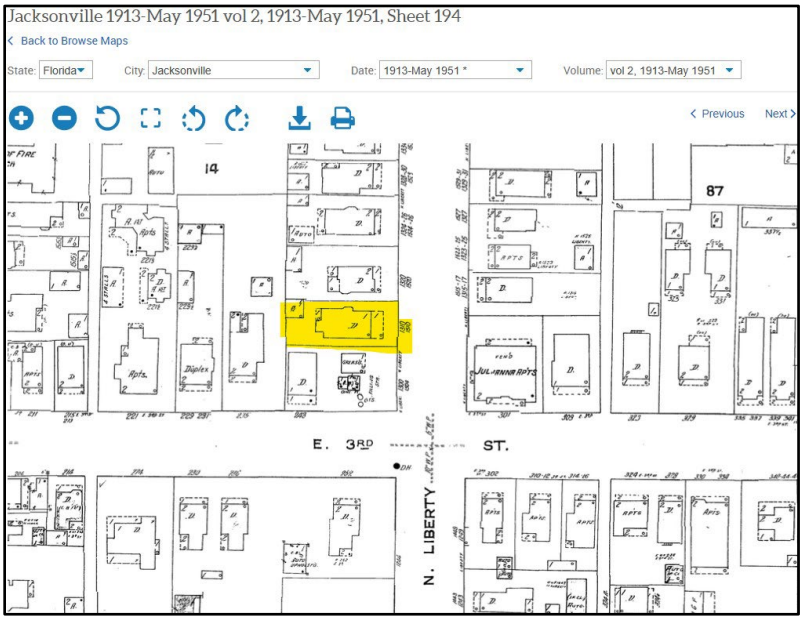

(Sanborn Map, Jacksonville 1913-May 1951, Volume 2, Sheet 194)

PICTURE OF PROPERTY WITH POSTED SIGN

PICTURE OF WINDOWS (CURRENT)

PICTURES OF PROPOSED TRIM

Application For A Minor Modification To A Previously Approved COA

Application Info

COA# To Modify	COA-25-31703		
Tracking #	32924	**Application Status**	FOUND SUFFICIENT
Date Started	09/10/2025	**Date Submitted**	09/10/2025

Planning and Development Department Info

MMA # MMA-25-32924

Admin Review ☑

Admin Recommendation FORWARD

Admin Date Of Action 9/23/2025

Forwarded to JHPC ☑

JHPC Meeting Date 10/22/2025

Staff Recommendation N/A

JHPC Recommendation N/A

JHPC Date Of Action N/A

Admin Details
N/A

JHPC Details
N/A

General Information On Applicant

Last Name GULLION **First Name** DON **Middle Name**

Company Name DREAM FINDERS HOMES

Mailing Address 14701 PHILIPS HWY

City JACKSONVILLE **State** FL **Zip Code** 32256

Phone 904 531 5923 **Fax** 904 **Email** DFH@ALLIANCEPERMITTING.COM

General Information On Agent(s)

Agent represents ◉ **Owner** ○ **Contractor** ○ **Architect** ○ **Consultant** ○ **Other**

Last Name GULLION **First Name** DON **Middle Name**

Company/Trust Name DREAM FINDERS HOMES

Mailing Address 14701 PHILIPS HWY

City JACKSONVILLE **State** FL **Zip Code** 32256

Phone 9045315923 **Fax** 904 **Email** DFH@ALLIANCEPERMITTING.COM

Description Of Property

Property Designation Riverside/Avondale Historic District

Property Appraiser's RE #(s) (10 digit number with a space ###### ####)

Map	RE#
	070962 0000

Companion Zoning Application Tracking # (if known)

Location Of Property

General Location

House #	**Street Name, Type and Direction**	**Zip Code**
1310	LIBERTY ST N	32206

Between Streets

3RD ST E **and** 4TH ST E

Type Of Improvement

Describe proposed work below. Note affected features and changes in design or materials. Be as specific, brief, and legible as possible.
(Example: reroof; replacing gray 3-tab shingles with black architectural shingles).

Proposed Work
APPLICANT IS PROPOSING TO INSTALL A 6 FT PRIVACY FENCE. FENCE LOCATION SHOWN ON ATTACHED SITE PLAN. APPLICANT ALSO IS SUBMITTING TO ADDRESS THE WINDOWS THAT ARE INSTALLED AT THE HOME. DREAM FINDERS HOMES RECALLS THE CONVERSATION AT THE INITIAL MEETING IN REGARD TO RECESSED WINDOWS RESULTING IN FLANGE WINDOWS BEING APPROVED TO INSTALL. THIS DISCUSSION CAME ABOUT DUE TO WATER INTRUSION ISSUES WITH RECESSED WINDOWS. THERE WAS A DISCUSSION TO POSSIBLY ADD TWO LAYERS OF WINDOW TRIM BANDS TO MAKE THE WINDOWS APPEAR RECESSED, BUT THE BOARD DID NOT FIND THAT ACCEPTABLE. WE HAVE ATTACHED PHOTOS OF 4 OTHER HOMES IN THE IMMEDIATE AREA THAT HAVE USED THE SAME TYPE OF FLANGE WINDOWS THAT WERE INSTALLED AT THE HOME BEING CONSTRUCTED.

Addition Information

Is this a violation? Check the box if it is. ☐

If you have been working with a planner choose one from the list

Additional Documents Provided

For this application there are no required documents. You may upload any documentation that will help the commissioners understand your project. Once a planner is assigned and reviews the request, they may need additional documents or pictures to process your request (to explain the scope of work).

	Description
☑	DOCUMENTS & PHOTOS TO SHOW PROPOSED FENCE AND ADDRESS INSTALLED WINDOWS.

Application Certification

For applications that can be approved administratively, there is no application fee.

For all applications that must go before the Historic Preservation Commission, a fee will be applied based on the type of work performed.

Application completeness review: All applications for Certificate of Appropriateness ("Application") will be reviewed for completeness by Planning and Development Department Staff. Any Application determined to be incomplete, will be returned to the applicant with comments detailing the deficiencies. No further action on the Application will take place until the application deficiencies are addressed. Once the Application is determined to be complete, Planning and Development Department Staff will prepare an invoice for the cost of the Application.

Payment deadline: The Invoice must be paid by the payment deadline in order to have the Application heard on the next scheduled Jacksonville Historic Preservation Commission (JHPC) regular meeting. The payment deadline is outlined on the City of Jacksonville's Planning and Development Department Website. Only Complete Applications will be invoiced. It is for the benefit of the applicant to supply staff with a complete Application in advance of the payment deadline. Due to the complexity and volume of Applications received by the Planning and Development Department, there is no guarantee that COA Applications submitted on the day of the payment deadline will be heard at the next regular meeting of the JHPC.

I, hereby, certify that I am the owner or the authorized agent of the owner(s) of the property described herein, that all answers to the questions in this application and all information contained in the material attached to and made a part of this application, are

accurate and true to the best of my knowledge and belief. I also attest by my signature that all required information for this application is completed and duly attached in the prescribed order. Furthermore, if the package is found to be lacking the above requirements, I understand that the application will be returned for correct information.

☑ I UNDERSTAND THE ABOVE DISCLAIMER REGARDING APPLICATION REVIEW. AGREED TO AND SUBMITTED.

2-4 37-2S-26E .104
SPRINGFIELD
N 43 1/2FT OF S 109FT OF E 105FT
LOT 3(OLD NO) BLK 14

HOOSE HOMES AND INVESTMENTS LLC
7563 PHILIPS HWY SUITE 208
JACKSONVILLE, FL 32256

2024

R-070962-0000

PRINTED 10/10/2024
BY: pao

Map Id: 6412 101100.22 1.05 1.00 1.00 SE SPRINGFIELD

BUILDING CHARACTERISTICS

CATEGORY	TYPE	%	PTS

CATEGORY	UNITS	ADJ

BASE RATE ADJ	ADJ
TOTAL ADJUSTED POINTS	0
DEPRECIATION ADJ	ADJ

TYPE	STYLE	CLS	QUA	HX %	NHX %	LOC	% COMP
				0.00	0.00	0.00	0

REPL. COST NEW	AYB	EYB	DT	NORM	% GOOD
0		0		0.00	0.00%

SAR	AREA	B	H	P.of B.	EFF. AREA	DPR VALUE
	0		0	0		$0

ACREAGE 0.10 PRICE/SF 0.00

0000 Vacant Res < 20 Acres

** VALUE SUBJECT TO CHANGE **

BUILDING: 0 AKA:

SITE ADDRESS: 1310 N LIBERTY ST, JACKSONVILLE 32206-

Duval County Property Appraisers Office Tax Dist USD1

VALUE SUMMARY

PRIMARY VALUATION METHOD	CAMA
BUILDING VALUE	0
EXTRA FEATURE VALUE	0
TOTAL MARKET LAND VALUE	65,340
MARKET VALUE OF AG LAND	0
TOTAL LAND VALUE AG + COMMON	0
MARKET VALUE	65,340
ASSESSED VALUE	43,843
CAP BASE YEAR	0
TAXABLE VALUE	43,843
EXEMPTIONS	None
TOTAL EXEMPTIONS VALUE	0
SENIOR EXEMPTION VALUE	0
SR/HISTORIC TAXABLE VALUE	N/A

PERMIT NO.	TP	ST.	DESCRIPTION	EST VALUE	ISSUE DATE
000006907	BLDG			450	08/03/1976

BUILDING DIMENSIONS

BUILDING NOTES

LN	VOLUME / YEAR	PAGE / CLERK	DATE OF SALE	IN	QU	VI	RE	SALES PRICE	NOTE AMOUNT	MAC	MAC AMOUNT	GRANTOR	GRANTEE	SALES NOTE
1	17973	01196	05/04/2017	WD	U	V	05	30000	0	N	0	REDMOND SHIRELLE L	HOOSE HOMES AND	20170613
2	15413	01089	10/29/2010	SW	U	V	05	16000	0	N	0	SRG HOLDING GROUP LLC	REDMOND SHIRELLE L	SEE RE#070961-0000
3	13065	02085	02/10/2006	WD	U	I	05	70000	0	N	0	PRUDIE THOMAS J TRUSTEE	SRG HOLDING GROUP LLC	20060418
4	11578	01459	11/14/2003	SW	U	V	01	10000	0	N	0	SPRINGFIELD RESTORATION		20040304 TRT DTD

LN	OB/XF CODE	DESCRIPTION	BLD	HX %	NHX %	LENGTH	WIDTH	UNITS	GRADE	FACTOR	UNIT PRICE	ADJ UNIT PRICE	ORIG COND	ACTUAL YEAR	EFF YEAR	YEAR ON ROLL	% COND	OB/XF MKT VALUE

APPRAISAL DATES

	DATE	APPRAISED BY
BUILDING		
LAND LINES	11/09/2000	RDC
VALUE REVIEW	05/06/2024	EMP
TRIENNIAL	06/01/2010	SGB
INCOME		

LT	LN	USE CODE	LAND USE DESCRIPTION	HX %	NHX %	RD	LOC ZONE	FRONT	DEPTH	SIZE FACTOR	UNITS	UNIT TYPE	DT	DPTH FACT	COND FACTOR	UNIT PRICE	ADJ UNIT PRICE	LAND VALUE
C	1	0101	RES MD 8-19 UNITS PER AC	0.00	100.00		RMD-S	44.00	105.00	100.00	44.00	F	1	0.90	1.00	1,650.00	1,485.00	65,340

LN	DATE	BLD	USER ID	CD	PARCEL NOTES

JHPC MEETING MINUTES FROM JUNE 25, 2025 (PAGES 22-25)

this kind of structure that's being -- the wall system that's being proposed.

This could also be a one-and-a-half-story massing rather than reading as a full two-story. I've seen that done many times for a detached accessory structure.

All right. So is there any other discussion of this or should we put this to the vote?

COMMISSIONER MORGAN: To the Chair, I just want to add, one of the things that I noticed that could be contributing as a help is -- a lot of times in these garage apartments there's not a living space on the first floor and, therefore, there's not the need for all of that space for ducting because it's not conditioned space.

So I'm just saying, those are how things are normally done. They can make it work because you've got a couple of things here that aren't typical to the ones that are normally done. All things to talk about.

COMMISSIONER EPSTEIN: Through the Chair, there's -- there's also such a small liveable space on the first floor that you might get

away with ducting in soffits and be able to give yourself another foot or two of space just to be able to kind of make that work.

THE CHAIRMAN: Or use a mini split.

COMMISSIONER MORGAN: Yeah.

THE CHAIRMAN: Okay. Is there any more discussion of this? I think we should --

COMMISSION MEMBERS: (No response.)

THE CHAIRMAN: Okay. There's a motion on the floor for the denial of this COA, so we're going to put it to the vote.

All those in favor?

COMMISSION MEMBERS: Aye.

THE CHAIRMAN: Opposed?

COMMISSION MEMBERS: (No response.)

THE CHAIRMAN: So let it be known COA-25-32344 at 1535 Ingleside Avenue is denied.

So now we'll go back to the two items that were on the consent agenda and we'll review those. We'll start with COA-24-31703 at 1310 Liberty Street North. We'll open the public hearing and hear a report from staff.

MR. WELLS: Thank you.

So this is COA-24-31703 for the property

located at 1310 Liberty Street North. The applicant here seeks to construct a two-story single-family residence. This structure -- the structures along this section of Liberty Street are frame vernacular styled homes. All but one contains a two-story, full-width front porch.

As designed, the proposed two-story home will be frame vernacular styled as well and consist of a shingled dutch roof form, a full-width, two-story front porch, horizontal lap siding, a concrete foundation wall with a stucco parge coating, and 2-over-2 windows.

We evaluated this application in accordance with our design guidelines and the Ordinance Code criteria and we found it to be consistent; therefore, we forward to you a recommendation for approval with the conditions noted in the report.

THE CHAIRMAN: Thank you.

Any questions for staff?

COMMISSION MEMBERS: (No response.)

THE CHAIRMAN: Is the applicant here?

(Mr. Gullion approaches the podium.)

THE CHAIRMAN: I think she already swore you in, right?

MR. GULLION: Yes, sir.

THE CHAIRMAN: If you'd just state your name and address.

MR. GULLION: (No response.)

THE REPORTER: If you would state your name, please, for the record.

MR. GULLION: Donald Gullion.

THE REPORTER: Thank you.

MR. GULLION: Thank you.

I think -- I guess the only thing I heard in the comments earlier was the question about the shutters and the siding being installed with the smooth side out. We're agreeable with -- with both of those, so -- we were planning on taking the shutters off. On the paperwork I saw that was -- given the option to make them operable or remove them, we were planning to remove them already.

That's all I had to add.

THE CHAIRMAN: Okay. So you're amenable to those changes?

MR. GULLION: Yes, sir.

THE CHAIRMAN: Removing the shutters and (microphone failure) smooth side out?

MS. PRYOR: I can't hear you.

THE CHAIRMAN: You're amenable to those two things, removing the shutters from the project and smooth side out on the cementitious siding?

MR. GULLION: Yes, sir.

THE CHAIRMAN: Okay. Thank you. If we have any more questions, we'll call you.

MR. GULLION: Thank you.

THE CHAIRMAN: Is there anyone else who wants to speak to this today?

AUDIENCE MEMBER: (Indicating.)

THE CHAIRMAN: Please come forward.

(Audience member approaches the podium.)

THE CHAIRMAN: State your name and address, she'll swear you in.

AUDIENCE MEMBER: Michael Haskins, 417 West 7th Street, 32206.

Sorry. Normally, I would send this as an email, but this came up last minute. I just wanted to ask a quick, clarifying question because a member of the community --

(Raises right hand.)

THE REPORTER: Thank you.

Do you affirm that the testimony you are about to give will be the truth, the whole

truth, and nothing but the truth?

MR. HASKINS: I do.

THE REPORTER: Thank you.

MR. HASKINS: -- a member of the community had asked me, and I just -- I was -- they had asked about the finish foundation height. I was looking at the conditions. It appears that it's 2 feet, 4 inches. I just wanted to confirm that so I could give this person that information.

THE CHAIRMAN: Yes, it shows on the front elevation it's 2 foot, 4 inches off grade.

MR. HASKINS: Okay. Thank you. Appreciate it.

THE CHAIRMAN: Is there anyone else here today that wishes to speak to this COA?

AUDIENCE MEMBERS: (No response.)

THE CHAIRMAN: No? All right. We'll close the public hearing, and I'll entertain a motion.

COMMISSIONER EPSTEIN: Motion to approve COA-24-31703 with conditions.

COMMISSIONER LOVE: Second.

THE CHAIRMAN: Discussion?

COMMISSIONER EPSTEIN: Through the Chair,

a couple of things. If the applicant is amenable for [sic] removing the shutters, there is a note about the trim for the head jamb and sill of the windows saying that it is for the sides and the rear, typical. If they are to remove the shutters, I would prefer that that note include the front of the house as well.

And I have a question for my fellow commissioners. If the shutters are removed, do the front windows then need to become wider? I think -- my answer is yes.

COMMISSIONER MORGAN: Through the Chair, I tend to agree.

COMMISSIONER HOFF: Through the Chair to Commissioner Epstein, what would you suggest specifically?

COMMISSIONER EPSTEIN: Through the Chair, I haven't been able to find -- I might be missing here the size that those windows are called out to be.

THE CHAIRMAN: Could the applicant come back up?

(Mr. Gullion approaches the podium.)

THE CHAIRMAN: Can you tell us offhand what the --

MR. GULLION: I would say they're 3-0/5-0, possibly 3-0/6-0 on the first floor. I -- without having the -- a floor plan here, I cannot say a hundred percent.

Can we see the front elevation again?

MR. WELLS: (Complies.)

COMMISSIONER EPSTEIN: I couldn't see where any window size was called out, unless I'm -- is that on the --

MR. GULLION: It would be on the floor plan, which I do not see. I just see the elevation.

Can you show the front elevation again? Yeah, I believe those are -- 3-0/6-0 first floor, 3-0/5-0 second floor.

THE CHAIRMAN: Which is typical.

Thank you.

MR. GULLION: Thank you.

THE CHAIRMAN: Any other discussion about those windows?

I'm on the fence about that since, typically, in the historic districts those residential windows usually are 36 inches wide and tend to be tall and thin unless they're doubled up.

COMMISSIONER MORGAN: To the Chair, that's sort of my thoughts too. And with the overall size of the facade, I don't know if doubling up is really appropriate in this scenario.

THE CHAIRMAN: I think it's a good consideration, but with the double porches, I mean -- I think there's a -- there's a depth to that. I tend to think they're okay.

Any other thoughts, Commissioners?

COMMISSIONER EPSTEIN: Through the Chair, I'm okay with that. I just want to make sure that if we are removing the shutters, that there is the language changed on the elevations to include the front windows having to have the head jamb and sill casings -- or trim.

THE CHAIRMAN: Well, there are two -- there are a minimum of two things that need to be addressed in a potential amendment maybe; is that right? Maybe?

Is there more discussion? Is there more discussion?

COMMISSIONER HOFF: So the other -- so the only other item would be the -- that the cementitious siding would have the smooth side out, right? That's the only other --

THE CHAIRMAN: Correct.

COMMISSIONER HOFF: -- change?

THE CHAIRMAN: Uh-huh.

COMMISSIONER EPSTEIN: Through the Chair to General Counsel, then. To dictate the change, to the wording on our elevation that's submitted, is that an additional notation that has to happen on Item Number 1? Just with that -- the terminology for the trim? Because it's not called out anywhere as a condition on here. It's just called out to say that it should match what's on the elevations, so I -- I'd just make that change.

MS. LOPERA: Through the Chair to Commissioner Epstein, yeah, what I would recommend is that you amend Condition 1, which reads material, design, and height shall be substantially consistent with that elevation. I would amend that to say -- to change the trim.

I'm not entirely sure what you were talking about with the change to the note, so that's why I'm a little -- at a loss of words --

(Simultaneous speaking.)

COMMISSIONER EPSTEIN: I'm sorry.

MS. LOPERA: -- with the --

COMMISSIONER EPSTEIN: On the right elevation there is a note that specifically called out, on the right elevation, towards the rear, pointing at a second story window, that says -- yeah, it says, 1-by-4 trim at window head jamb and sill at sides and rear, typical, which means if we take these -- which means there never was going to be trim on the front, according to that note. And if we take these shutters off, they -- then is there trim on those windows where the shutter is removed?

MS. LOPERA: Through the Chair to Commissioner Epstein, so would it be appropriate to amend Condition 1 to read -- you know, add trim to the front elevation, matching the other sides, or something to that effect?

COMMISSIONER EPSTEIN: Yes.

MR. GULLION: If I may, it's there. It's just not called out on the front. All the windows are trimmed the same. It's part of our -- keep the water intrusion out and everything, so --

COMMISSIONER EPSTEIN: Through the

Chair --

MR. GULLION: It's what we notated.

COMMISSIONER EPSTEIN: Yeah. Through the Chair, I didn't know how you weren't having trim.

MR. GULLION: Yeah.

COMMISSIONER EPSTEIN: And it was just really an awkward note, that it was called -- it specifically left the front off of there, so --

MR. GULLION: Right.

THE CHAIRMAN: Okay. Is there any other discussion?

COMMISSION MEMBERS: (No response.)

THE CHAIRMAN: Okay.

COMMISSIONER EPSTEIN: I would like to make a motion to amend the current motion.

Motion to approve COA-24-31703 with Condition 1 reading: Materials, design and height shall be substantially consistent with the elevation drawings dated November 20, 2024, or as otherwise approved by the Historic Preservation Section.

Adding the note that the front windows shall have trim consistent with the 1-by-4 trim

on the sides and the rear.

And that the -- Condition Number 5 shall read: Fascia boards and soffits composed of wood or cementitious material and siding with cementitious material that's on the smooth side. So no texture.

And then Condition Number 12 will be there shall be no shutters on the facade.

THE CHAIRMAN: Well done.

All those in favor?

MS. LOPERA: A second?

COMMISSIONER MORGAN: Second.

THE CHAIRMAN: Sorry.

Did you second?

COMMISSIONER MORGAN: I seconded.

THE CHAIRMAN: All those in favor?

COMMISSION MEMBERS: Aye.

THE CHAIRMAN: Opposed?

COMMISSION MEMBERS: (No response.)

THE CHAIRMAN: And now --

COMMISSIONER EPSTEIN: So now I'd like to make a motion to move the motion as amended.

COMMISSIONER MORGAN: Second.

THE CHAIRMAN: All those in favor?

COMMISSION MEMBERS: Aye.

THE CHAIRMAN: All right. So let it be known that COA-24-31703 at 1310 Liberty Street North has been approved with the amended conditions.

Then COA-25-32197 at 1611 Laura Street North -- oh, my goodness. We'll table that and we'll take a 10-minute break, so we'll resume -- I was looking for you, Diane. We'll resume at 3:06.

(Discussion held off the record.)

THE CHAIRMAN: Fifteen? 3:11. We'll resume at 3:11.

(Whereupon, a brief recess was taken.)

THE CHAIRMAN: All right, everybody. We're going to get started here. Everybody ready? We'll call the meeting back to order.

We will -- the consent agenda, we have COA-25-32197 at 1611 Laura Street north. We'll open the public hearing and listen to a staff report.

MR. ARSENAULT: Thank you.

Through the Chair to the Commission, COA-25-32197 for property located at 1611 Laura Street North is for alterations to a contributing historic structure. The existing

structure is a one-story frame vernacular building characterized by its front-facing gable roof with a chimney, its irregular floor plan, its predominantly 2-over-2 wood windows, and its front porch with Doric columns and exposed rafter ends.

The proposed alterations include relocating a side door to the rear of the structure, relocating two windows from the rear to the left side of the building, enclosing several window openings on the rear, resizing a bathroom window on the rear, making foundation repairs and installing lattice, replacing damaged and missing siding on the sides and back of the rear of the structure, partial siding replacement on the left side of the addition, after the fact, removal of a gas tank on the left side of the property, a like-for-like composition shingle reroof, the removal of the concrete steps to the side entry, the construction of rear steps and railing to the proposed entry, and the painting of the structure.

The replacement of repairable historic windows and siding requires review by the

Jacksonville Historic Preservation Commission. The siding and window on the left side were replaced. They were historic but of unknown condition.

The proposed alterations will take place on the rear and side elevations, and those requiring Commission review including the after-the-fact removal of siding and replacement of a window on the left as well as the proposed relocation of historic doorways and window openings along the side and rear elevations.

The windows to be replaced on the rear and sides are historic but nonoriginal casement windows which are not identified on the Florida Master Site File for this property.

The windows on the rear are part of what was originally a porch which was identified to have been enclosed sometime shortly after the 1913 Sanborn fire insurance survey.

The window and door on the left side of the structure and the right side bathroom window are part of two early additions to the structure as well.

Staff conducted a site visit on April 10th

SIGNED FINAL ORDER COA-25-31703
DATED JUNE 27, 2025

BEFORE THE HISTORIC PRESERVATION COMMISSION OF THE CITY OF JACKSONVILLE

CERTIFICATE OF APPROPRIATENESS APPLICATION NO.: **COA-24-31703**

IN RE: The Certificate of Appropriateness Application of:

Address: **1310 Liberty Street North, RE# 070962-0000**

Owner: **Dream Finders Homes LLC**
14701 Philips Highway
Jacksonville, Florida 32256

Applicant: **Same as Owner**

ORDER ON COA-24-31703: APPROVED WITH CONDITIONS

Having duly considered both the testimonial and documentary evidence presented at the meeting and public hearing on **June 25, 2025**, including the COA Application and the Planning and Development Department's Staff Report and Recommendation and all attachments thereto ("Staff Report"), a portion of which is attached hereto as **EXHIBIT A**, and **on file** in its entirety in the Planning and Development Department, the Jacksonville Historic Preservation Commission hereby

FINDS AND DETERMINES:

1. That the applicant did comply with the procedural and application requirements set forth in Section 307.106 of the Jacksonville Ordinance Code; and

2. That as stated in the record, substantial competent evidence demonstrates that application **COA-24-31703** meets, to the extent applicable and as modified by any conditions contained herein, the standards and criteria set forth in Section 307.106 of the Jacksonville Ordinance Code; and

3. That the findings and recommendations in the Staff Report for application **COA-24-31703**, to the extent consistent with this **Order**, are hereby adopted and incorporated herein; and

4. That the land which is the subject of application **COA-24-31703** is owned by **Dream Finders Homes LLC.**

NOW THEREFORE, it is **ORDERED** by the Historic Preservation Commission:

Application **COA-24-31703** is hereby **APPROVED**, and a certificate of appropriateness is hereby

granted for **New Construction** subject to the following **CONDITIONS**:

1. Materials, design, and height shall be substantially consistent with the revised elevation drawings dated November 20, 2024, attached hereto as **EXHIBIT B** or as otherwise approved by the Historic Preservation Section.
2. Location and orientation shall be as substantially shown on the site dated June 13, 2006.
3. Prior to permitting, the applicant shall demonstrate that the front setback will be within 25 percent of the average required front yard of adjacent contributing structures.
4. Columns shall have caps and bases.
5. The fascia boards and soffits shall be composed of wood or a cementitious material (no vinyl or PVC), smooth side shall be visible (no texture).
6. The porch railing system shall be made of wood or wood composite, and the spindles shall be set in between an upper and lower railing with no exposed ends.
7. The front entry walkway shall be limited to the width of the front porch steps and shall be composed of brick-like pavers, poured concrete, or hexagonal brick pavers.
8. A secondary walkway shall be no wider than three (3) feet.
9. The front door shall have clear glass without any decorative etching or frosted glass.
10. If a well is required for water service, it shall be placed in the rear yard or a non-street visible location.
11. All windows shall be installed in accordance with the latest version of the HPS Window Supplement.
12. The shutters shall be removed entirely.
13. Prior to the final inspection of any building permit, the owner or their agent shall submit the Historic Preservation Section an affidavit and any supplementary evidence that verifies compliance with all conditions of the COA final order.

<u>General</u>

- Failure to exercise the COA hereby granted by performance of the action herein approved within one (1) year of the effective date of this Order shall render this COA invalid and all rights arising hereunder shall terminate.
- The certificate of appropriateness granted herein shall not be construed as an exemption from any other applicable local, state, or federal laws, regulations, requirements, permits or approvals. All other applicable local, state or federal permits or approvals shall be obtained before commencement of the development or use and issuance of this certificate of appropriateness is based upon acknowledgement, representation and confirmation made by the applicant(s), owner(s), developer(s) and/or any authorized agent(s) or designee(s) that the subject business, development and/or use will be operated in strict compliance with all laws. Issuance of this certificate of appropriateness does not approve, promote or condone any practice or act that is prohibited or restricted by any federal, state or local laws.

Executed this 27 day of **June 2025**.

FORM APPROVED:

Carla A. Lopera
Office of General Counsel

Michael Montoya
Chairman
Historic Preservation Commission

Copy to:

Owner: **Dream Finders Homes LLC**
14701 Philips Highway
Jacksonville, Florida 322056

Applicant: **Same as Owner**

RIGHT TO APPEAL. Persons listed in Section 307.202, Ord. Code, may appeal this decision to the City Council within twenty-one (21) calendar days of the date of this Order by filing a Notice of Appeal with the Legislative Services Division of the Council as required by Section 307.203, Ord. Code. Failure to file a Notice of Appeal with the Legislative Services Division within the time prescribed waives the right to appeal this Order.

NOTICE: This Order does not become final until the twenty-one (21) day appeal period has elapsed or, if such an appeal has been filed, until all proceedings have been completed. Therefore, any work commenced during this appeal period is done at the risk of the owner and/or the applicant.

GC-#1695427-v1-Final_Order_COA-24-31703_6_25_25.docx

EXHIBIT A

June 25, 2025

Report of the Jacksonville Planning and Development Department
Certificate of Appropriateness Application COA-24-31703

Address: 1310 Liberty Street North, RE# 070962-0000

Location: West side of Liberty Street North, between 3rd Street East and 4th Street East

Owner: Dream Finders Homes LLC
14701 Philips Highway
Jacksonville, FL 32256

Applicant: Same as Owner

Year Built: N/A

Designation: Springfield

Request: New Construction

Summary Scope of Work:

1. Construction of a single family residence

Recommendation: **Approve with Conditions**

Conditions:

Construction of a Single-Family Residence

1. Materials, design, and height shall be substantially consistent with the elevation drawings dated **November 20**, **2024**, or as otherwise approved by the Historic Preservation Section.
2. Location and orientation shall be as substantially shown on the site plan dated **June 13**, **2006**.
3. Prior to permitting, the applicant shall demonstrate that the front setback will be within 25 percent of the average required front yard of adjacent contributing structures.
4. Columns shall have caps and bases.
5. The fascia boards and soffits shall be composed of wood or a cementitious material (no vinyl or PVC).
6. The porch railing system shall be made of wood or wood composite, and the spindles shall be set in between an upper and lower railing with no exposed ends.
7. The front entry walkway shall be limited to the width of the front porch steps and shall be composed of brick-like pavers, poured concrete, or hexagonal brick pavers.
8. The secondary walkway shall be no wider than three (3) feet.

9. The front door shall have clear glass without any decorative etching or frosted glass.
10. If a well is required for water service, it shall be placed in the rear yard or a non-street visible location.
11. All windows shall be installed in accordance with the latest version of the HPS Window Supplement.
12. The shutters shall either be fully functional or removed entirely.
13. Prior to the final inspection of any building permit, the owner or their agent shall submit to the Historic Preservation Section an affidavit and any supplementary evidence that verifies compliance with all conditions of the COA final order.

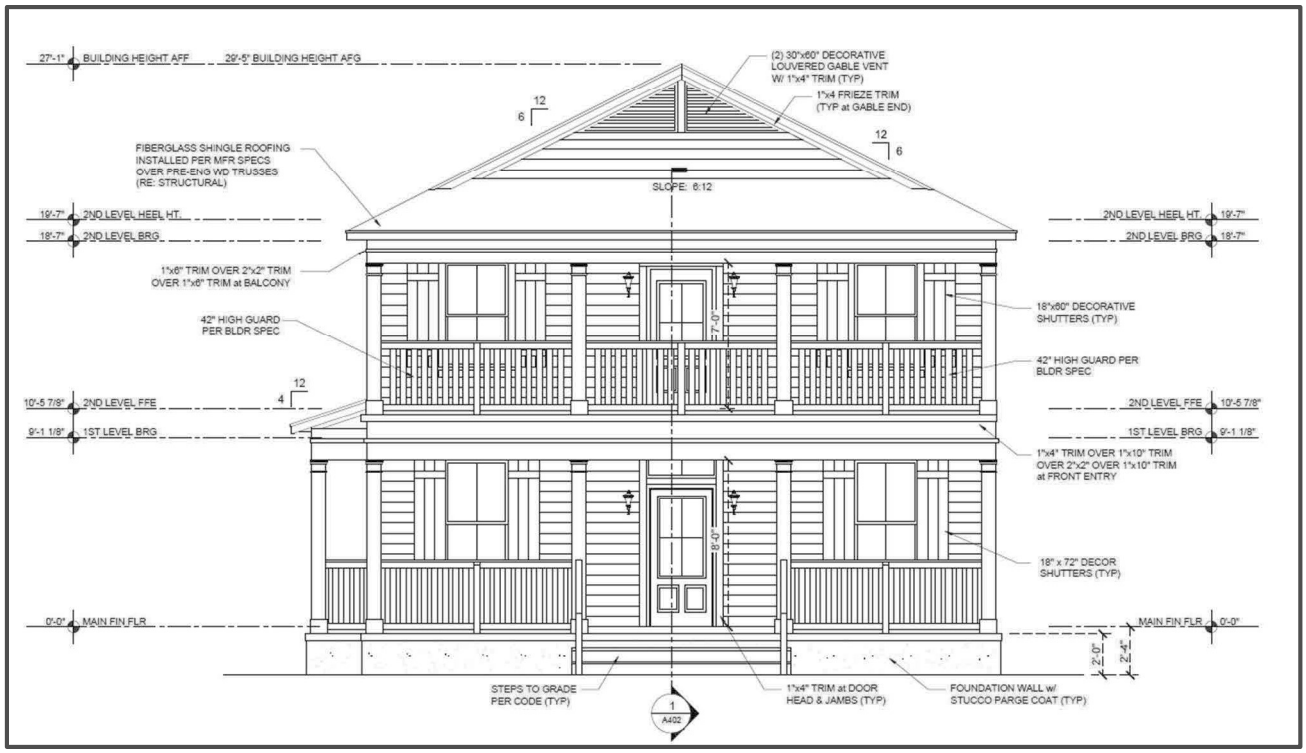

PROJECT DESCRIPTION

COA-25-31703 is for the construction of a two-story single-family residence within the Historic District of Springfield. The subject site is currently a vacant interior lot that is approximately one-hundred-and-five (205) feet long and forty-four (44) feet wide. The structures along this section of North Liberty Street are framed vernacular styled homes with all but one structure containing a two-story full width front porch. As designed, the proposed 2,102 square-foot two-story home will be framed vernacular styled and consist of a shingled Dutch roof form, a full-width two-story front porch, horizontal lap siding, a concrete foundation wall with a stucco parge coating, and two-over-two windows.

STAFF SUMMARY AND ANALYSIS

Staff considered the applicable Design Guidelines for the Historic District and the Ordinance Code criteria found in Sections 307.106(k), 307.106(l), 307.106(m), 307.106(n), and 307.106(o). The following is Staff's analysis:

- Development of a two-story single-family home on a vacant lot amidst other two-story residential homes provides for compatible reuse of an infill lot in the Springfield Historic District and contributes to the residential streetscape. The design of the two-story full-width front porch ensures a compatible relationship with other properties in the historic district; the frame vernacular style is consistent with the architectural styles of the neighborhood. Therefore, the proposed development is consistent with Sections 307.106(k)(1 and 2).
- The proposed work can be completed within a reasonable period of time, consistent with Section 307.106(k)(4).
- The overall height of the proposed structure from the finished floor is approximately twenty-seven (27) feet, which is compatible with the heights of the adjacent structures. Two-story single-family homes are the dominant residential development typology along this block. The scale and massing of the proposed structure are reasonably consistent with other surrounding two-story residences. The front and side setbacks as shown on the site plan dated June 13, 2006, are consistent with other nearby structures and have been conditioned to ensure compatibility. For these reasons, the development is consistent with Sections 307.106(m)(1, 3, and 6).
- The proposed elevations show two-over-two patterned windows with a header height window design characteristic in the Springfield Historic District. The majority of the windows are vertically oriented and of a traditional size. The front door is a paneled three-fourth light four-grid door with a transom which can be found on other structures within the District. Consistent with Section 307.106(m)(2), the proportions and relationships between the windows and doors are compatible with the architectural style of structures in the neighborhood.
- Consistent with Section 307.106(m)(4), the design of the Dutch roof form is compatible with the roof forms within the District, and similar roof forms are found surrounding the property as well.
- The proposed design of the new structure maintains the alignment of windows and sills, uniformed openings, and horizontal rhythms along the streetscape. As such, the proposed structure is compatible with the directional expression of surrounding structures and consistent with Section 307.106(m)(7).
- Consistent with Section 307.106(m)(8), the proposed design of the structure contains many architectural details that are in keeping with historic elements found throughout the Springfield Historic District. Such details include:
    - The Hardie board lap siding, a contemporary material used to replicate the finish and dimension of wood lap siding, which is common in Springfield;
    - Concrete foundation with stucco finish;
    - Vertically-oriented windows spaced evenly throughout the structure; and
    - Tapered porch columns with caps and bases.
- The Historic District Design Guidelines for the Springfield Historic District references “New Construction” and lists Standards Two and Nine of the *Secretary of the Interior’s Standards for Rehabilitation*. Standard Two refers to the relationship of new construction

to adjacent buildings, landscape and streetscape features, and open spaces. The relationship of the proposed building to the surrounding context is described above. Standard Nine emphasizes that new construction shall not destroy historic materials and is differentiated from the old while being compatible in massing, size, scale, and architectural features in order to preserve the historical integrity of the property and its immediate surroundings. No historic fabric will be impacted since the new construction is infill of a vacant residential lot. Also, the proposed new construction is compatible with the surrounding residential structures. The proposed residence is differentiated from historic structures by the finish and materials used and is generally compatible with the massing and architectural features of adjacent properties.

For these reasons, it is the position of the Planning and Development Department that the proposed work under the stated conditions is consistent with:

- Section 307.106(k) General Standards: 1, 2, and 4
- Section 307.106(m) Guidelines on New Construction: 1, 2, 3, 4, 6, 7, 8
- Historic District Design Guidelines, Section on "New Construction"

CODE CRITERIA AND DESIGN GUIDELINES

General Criteria-

- 307.106(k)(1) - The effect of the proposed work on the landmark, landmark site or property within an historic district upon which such work is to be done;

- 307.106(k)(2) - The relationship between such work and other structures on the landmark site or other property in the historic district;

- 307.106(k)(4) - Whether the plans may be carried out by the applicant within a reasonable period of time.

New Construction

- 307.106(m)(1) - *Height.* The height of any proposed alteration or construction shall be compatible with the style and character of the landmark and with surrounding structures in an historic district.

- 307.106(m)(2) - *Proportions of windows and doors.* The proportions and relationships between doors and windows shall be compatible with the architectural style and character of the landmark and with surrounding structures in an historic district.

- 307.106(m)(3) - *Relationship of building masses, setbacks and spaces.* The relationship of a structure within an historic district to the open space between it and adjoining structures shall be compatible.

- 307.106(m)(4) - *Roof shape.* The design of the roof shall be compatible with the architectural style and character of the landmark and surrounding structures in an historic district.

- 307.106(m)(6) - *Scale.* The scale of the structure after alteration, construction, or partial demolition shall be compatible with its architectural style and character and with surrounding structures in an historic district.

- 307.106(m)(7) - *Directional expression.* Facades in historic districts shall blend with other structures with regard to directional expression. Structures in an historic district shall be compatible with the dominant horizontal or vertical expression of surrounding structures. The directional expression of a landmark after alteration, construction, or partial demolition shall be compatible with its original architectural style and character.

- 307.106(m)(8) - *Architectural details.* Architectural details including materials and textures shall be treated so as to make a landmark compatible with its original architectural style and character and to preserve and enhance the architectural style or character of a landmark or historic district. The Commission will give recommendations as to appropriate colors for any landmark or historic district.

Historic District Design Guidelines, "New Construction"

- Secretary of the Interior's Standards for Rehabilitation (2): The historic character of a property shall be retained and preserved. The removal of historic materials or alteration of features and spaces that characterize a property shall be avoided.

- Secretary of the Interior's Standards for Rehabilitation (9): New additions, exterior alterations, or related new construction shall not destroy historic materials that characterize the property. The new work shall be differentiated from the old and shall be compatible with the massing, size, scale, and architectural features to protect the historic integrity of the property and its environment.

LOCATION MAP

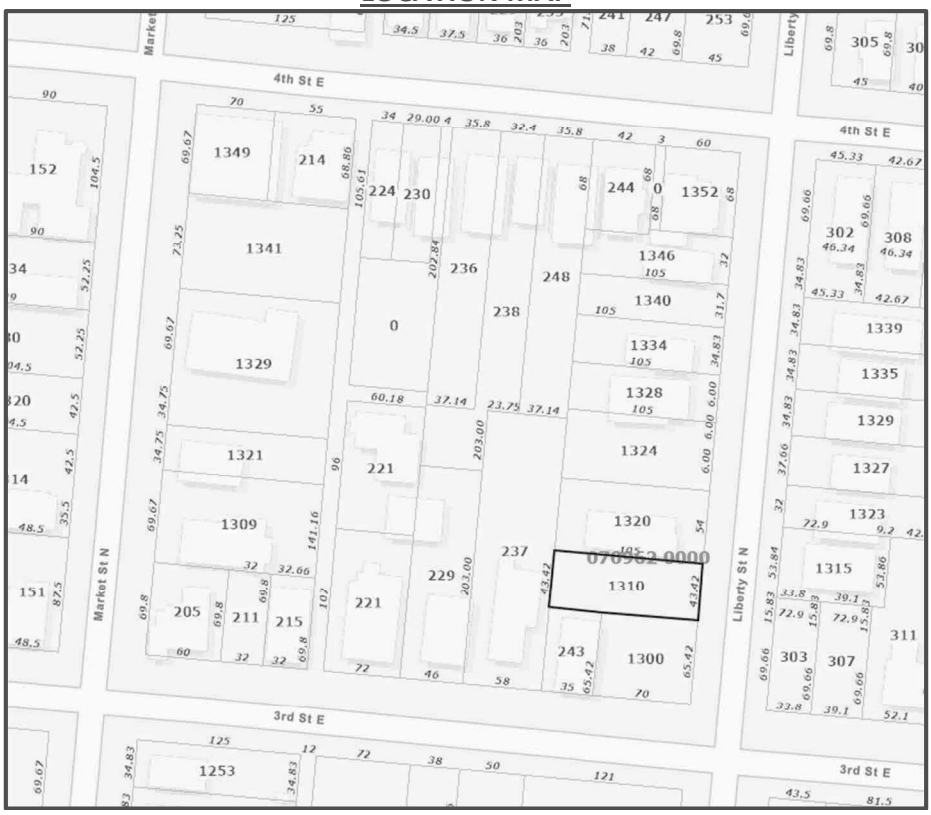

PICTURE OF PROPERTY WITH POSTED SIGN

ELEVATION DRAWINGS DATED NOVEMBER 20, 2024

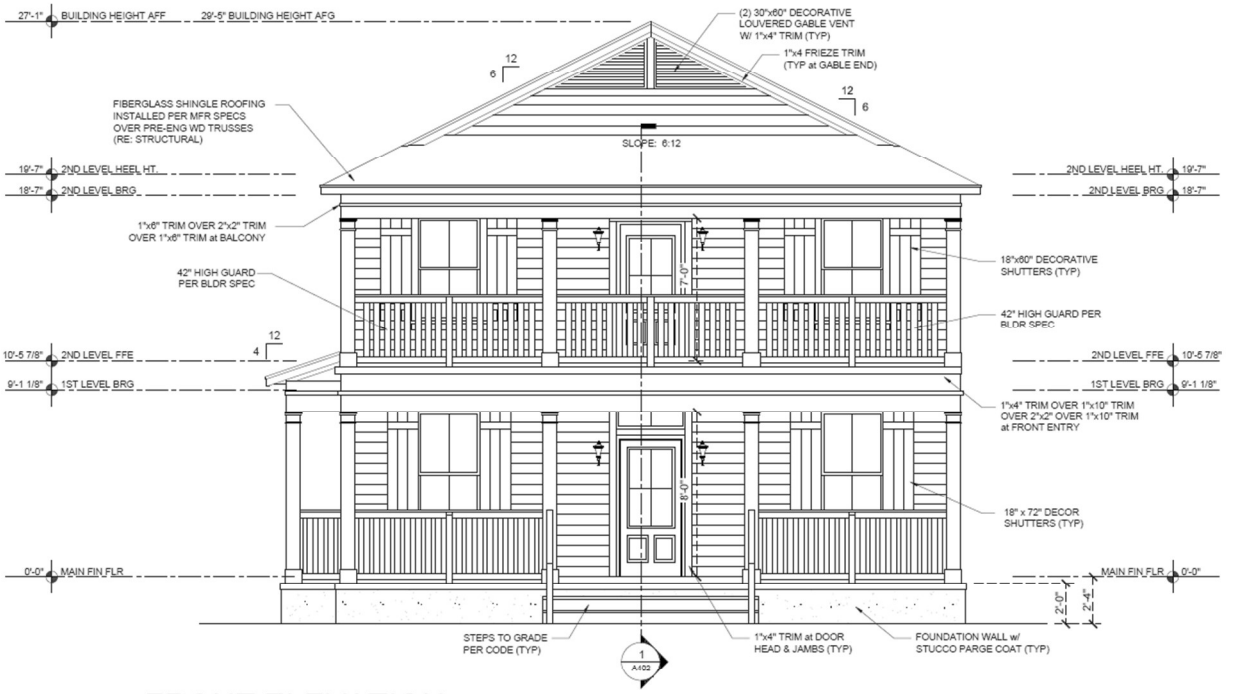

FRONT ELEVATION

SCALE: 1/4" = 1'-0"

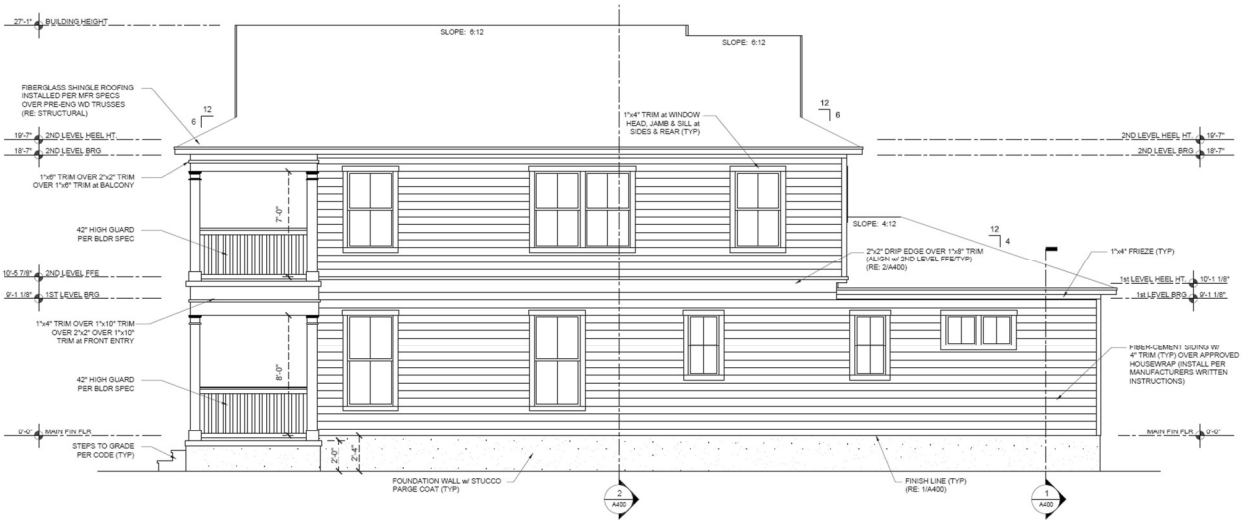

RIGHT ELEVATION

SCALE: 1/4" = 1'-0"

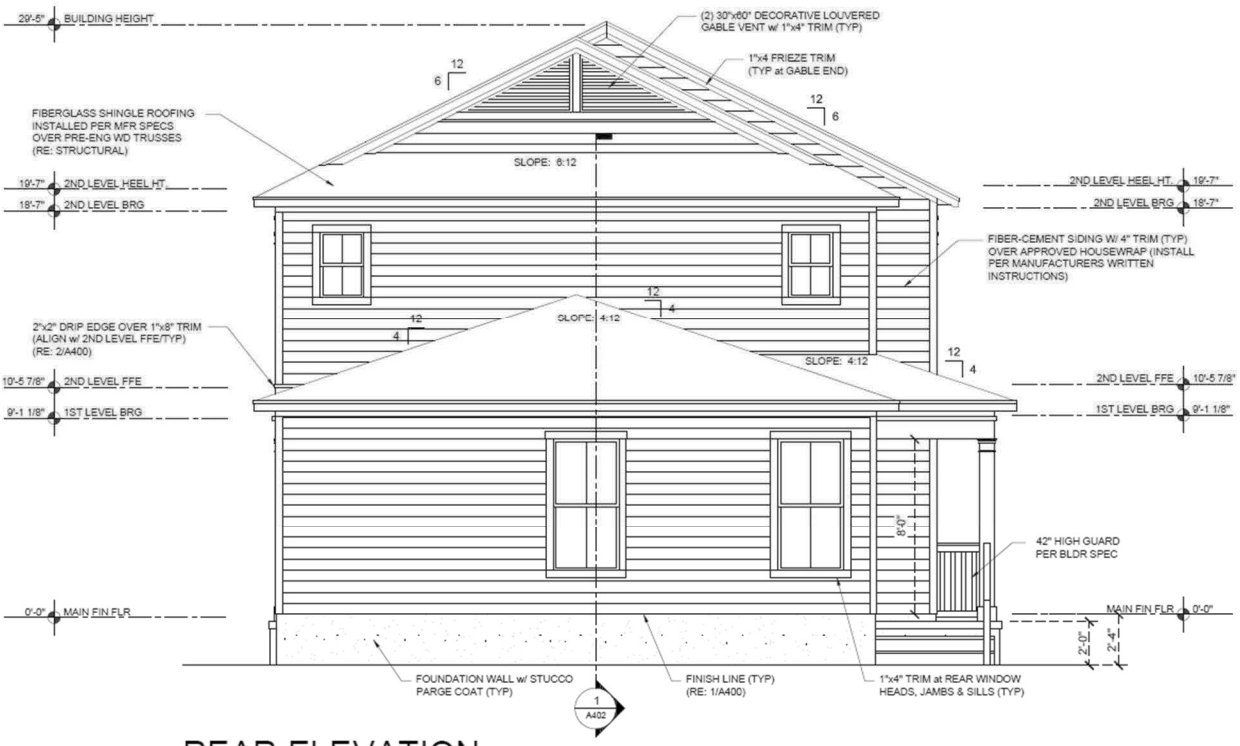

REAR ELEVATION

SCALE: ¼" = 1'-0"

LEFT ELEVATION

SCALE: ¼" = 1'-0"

SITE PLAN DATED JUNE 13, 2006

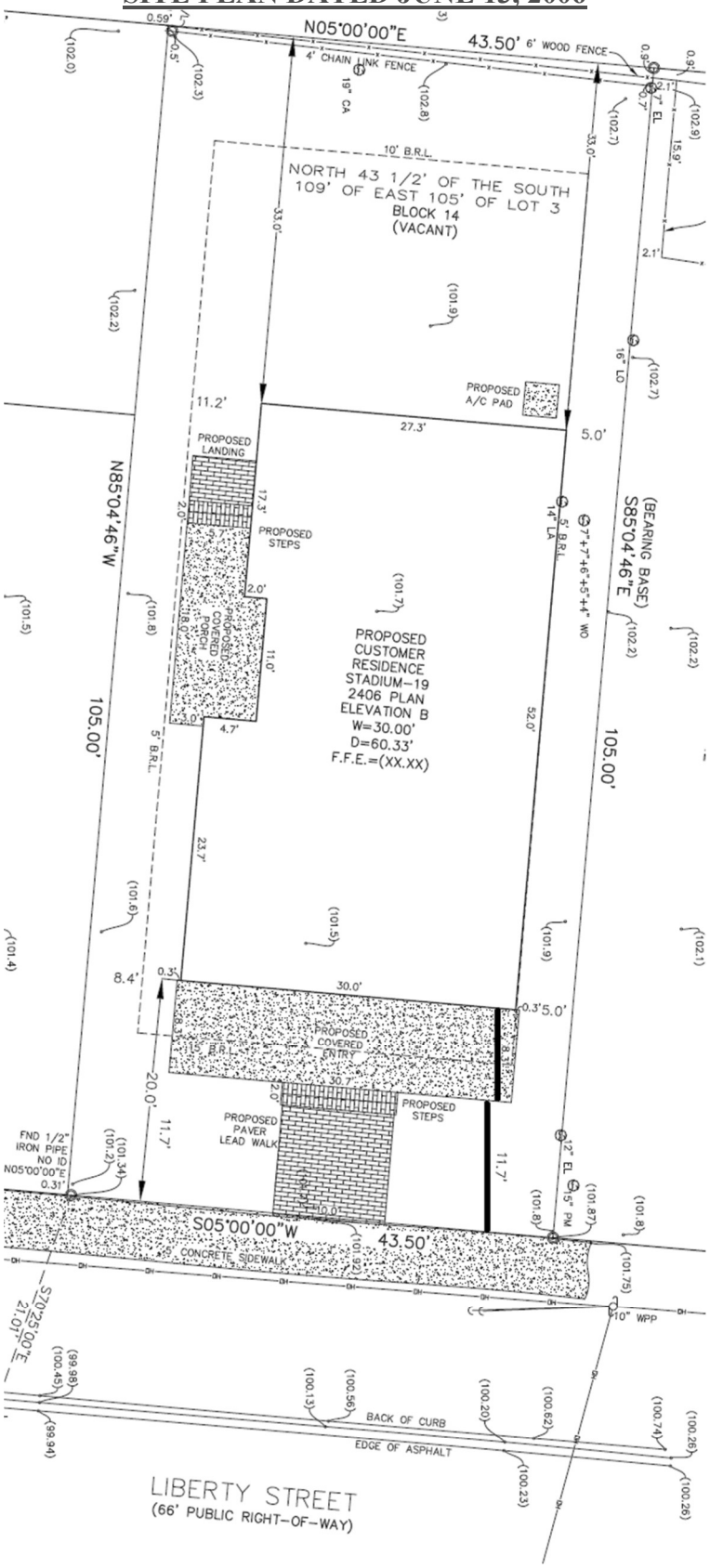

COA-24-31703

DREAM FINDERS HOMES

STADIUM HOME - DESIGNER SERIES / ELEVATION 'B'

1310 LIBERTY STREET NORTH

JACKSONVILLE, FLORIDA

ARCHITECTURAL SYMBOLS LEGEND

SECTION & DETAIL MARKERS:

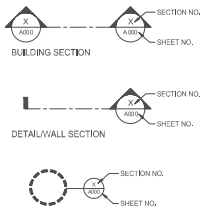

SYMBOLS:

DRAWING INDEX

ARCHITECTURAL		STRUCTURAL	
0000	COVER, ARCH SYMBOLS & SHT INDEX	ST-1	STRUCTURAL GENERAL NOTES
A000	ARCHITECTURAL GENERAL NOTES	ST-2	STRUCTURAL FOUNDATION PLAN
A010	ARCHITECTURAL SITE PLAN	ST-2D	STRUCTURAL FOUNDATION DETAILS
A100	ARCHITECTURAL FOUNDATION	ST-3	1st LEVEL STRUCTURAL PLAN
A110	1st LEVEL FLOOR PLAN	ST-3A	1st LEVEL STRUCTURAL FRAMING PLAN
A120	2nd LEVEL FLOOR PLAN	ST-4	2nd LEVEL STRUCTURAL PLAN
A160	ROOF PLAN	ST-4A	2nd LEVEL STRUCTURAL FRAMING PLAN
A200	EXTERIOR ELEVATIONS	ST-5	STRUCTURAL DETAILS
A201	EXTERIOR ELEVATIONS	ST-6	STRUCTURAL DETAILS
A400	ARCHITECTURAL WALL SECTIONS		
A401	ARCHITECTURAL WALL SECTIONS		
A402	ARCHITECTURAL PORCH SECTION		
A403	ARCHITECTURAL PORCH SECTION		
A500	ARCHITECTURAL FLASHING DETAILS		
ELECTRICAL		MECHANICAL	
E100	1st LEVEL ELECTRICAL PLAN		
E101	2nd LEVEL ELECTRICAL PLAN		
		PLUMBING	

BUILDING CODE SUMMARY

CODE ENFORCEMENT JURISDICTION: ST JOHNS COUNTY

ZONING CODE: THE PROPOSED STRUCTURE COMPLIES WITH THE REQUIREMENTS OF CHAPTER 656, ZONING CODE FOR RESIDENTIAL DISTRICTS, INCL MAX BLDG HGT OF 35'

ZONING CLASSIFICATION: N/A | WIND ZONE: N/A

FL BUILDING CODE - RESIDENTIAL: 2023
FL BUILDING CODE - PLUMBING: 2023
FL BUILDING CODE - MECHANICAL: 2023
FL BUILDING CODE - FUEL GAS: 2023
NATIONAL ELECTRIC CODE: 2020
FL FIRE PREVENTION CODE: 2023

OCCUPANCY CLASSIFICATION: RESIDENTIAL | CONSTRUCTION TYPE: V-B

SPRINKLED: NO | FIRE DISTRICT: NO

DESIGN CRITERIA: APPROX HEIGHT AFG: 30'-4" | MEAN ROOF HEIGHT AFF: 24'-10"

BUILDING AREA:

1st FLOOR:	1,440	OCCUPANT LOAD: N/A MIN EXITS: N/A MAX DIST: N/A
2nd FLOOR:	966	OCCUPANT LOAD: N/A MIN EXITS: N/A MAX DIST: N/A
STUDIO:	460	OCCUPANT LOAD: N/A MIN EXITS: N/A MAX DIST: N/A
TOTAL LIVING:	2,866	
GARAGE:	497	LOT AREA:
ENTRY:	240	GROSS AREA: PUD COMPLIANT
BALCONY:	240	
COVERED PORCH & BREEZEWAY:	333	
TOTAL NON-LIVING:	1,310	
TOTAL UNDER ROOF:	4,176	

CONSTRUCTION NOTES: N/A

tds
true design studios
4745 SUTTON PARK CT., SUITE 402
JACKSONVILLE, FLORIDA 32224
P 904.821.5200 F 904.992.8700
WWW.TRUEDESIGNSTUDIOS.NET

DREAM FINDERS
THE MARK OF A QUALITY HOME

360 Corporate Way
Orange Park, FL 32073
www.dreamfindershomes.com

STADIUM - 19
2406 PLAN
ELEVATION B

1310 LIBERTY ST NORTH
JACKSONVILLE, FL

PROJECT NO: 2024.010319
DATE: 11-20-24
DRAWN: JC
CHKD: DWR

REVISIONS:
06-06-25 - PRC - JC

0000

DO NOT SCALE THESE DRAWINGS - DRAWING SCALE IS 50% OF DESIGNATED SCALE IF PRINTED ON 11"x17" MEDIA

NOT ISSUED FOR CONSTRUCTION 00-00-0000

EXHIBIT B

COA-24-31703

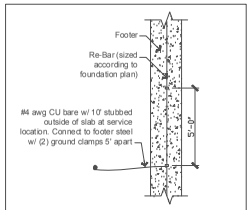

UFER GROUND DETAIL
N.T.S.

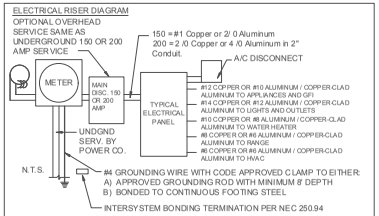

NOTE:
ELECTRICAL MATERIAL AND INSTALLATIONS SHALL COMPLY WITH APPLICABLE PROVISIONS OF THE NFPA 70, LOCAL CODES AND LOCAL POWER/UTILITY COMPANY

GENERAL ELECTRICAL NOTES

ALL ELECTRICAL DESIGN AND WORK SHALL BE IN STRICT COMPLIANCE WITH THE 2020 NATIONAL ELECTRIC CODE

- PER NEC SECTION 210.12 (B) ALL 15A & 20A, 120V BRANCH CIRCUITS SUPPLYING OUTLETS REQUIRE AFCI PROTECTION
- CARBON MONOXIDE PROTECTION PER RESIDENTIAL CODE R315.1 TO BE INSTALLED WITHIN 10' OF EVERY SLEEPING ROOM
- ALL OUTLETS SHOULD BE AFCI PER NEC - U.N.O.
- PER NEC SECTION 210.8(A)(5) ALL 15A & 20A, 15V RECEPTACLES INSTALLED OUTDOORS MUST BE GFCI-PROTECTED
- PER NEC SECTION 210.8(A)(5) ALL 15A & 20A, 15V RECEPTACLES INSTALLED WITHIN 6' OF SINK (IN NON-DWELLING OCCUPANCIES-i.e. OUTDOOR SUMMER KITCHENS RECEPTACLES) MUST BE GFCI-PROTECTED
- PER NEC SECTION 406.8(B)(I) 15A & 20A RECEPTACLES IN A WET LOCATION MUST BE WITHIN AN ENCLOSURE THAT IS WEATHERPROOF WHEN AN ATTACHMENT IS PLUGGED IN AN ALL NON-LOCKING RECEPTACLES SHALL BE LISTED AS WEATHER RESISTANT
- PER NEC SECTION 406.II IN DWELLING UNITS, ALL 15A & 20A, 15V RECEPTACLES SHALL BE LISTED AS TAMPER-RESISTANT
- PER NEC SECTION 406.9(C) RECEPTACLES SHOULD NOT BE INSTALLED WITHIN A ZONE MEASURED 3FT HORIZONTALLY AND 9FT VERTICALLY FROM THE TOP OF THE BATHTUB RIM OR SHOWER STALL THRESHOLD.
- PER NEC SECTION 800.156 NO LESS THAN ONE COMMUNICATION OUTLET SHALL BE INSTALLED WITHIN EACH DWELLING UNIT
- PER NEC SECTION R314.3 AND R315.1 SMOKE DETECTORS TO BE INSTALLED INSIDE EACH SLEEPING AREA
- ALL SMOKE ALARMS SHALL BE LISTED AND LABELED IN ACCORDANCE WITH UL 217, PER RESIDENTIAL CODE 314.1. GC TO INSTALL; KIDDE MODEL # 14618A SMOKE ALARM, OR APPROVED EQUAL
- JUNCTION BOX AT WATER HEATER, RANGE AND/OR DRYER TO BE 220V IN NON GAS COMMUNITIES, AND 110V IN COMMUNITIES THAT HAVE GAS OPTIONS PROVIDE APPROPRIATE RECEPTACLE PER APPLIANCE
- ALL PERMANENTLY INSTALLED LUMINARIES, EXCLUDING THOSE IN KITCHEN APPLIANCES, SHALL HAVE AN EFFICACY OF AT LEAST 45 LUMENS-PER-WATT OR SHALL UTILIZE LAMPS WITH AN EFFICACY OF NOT LESS THAN 65 LUMENS-PER-WATT PER R404.1.
- PER RESIDENTIAL CODE M1305.1 A LEVEL WORKING SPACE NOT LESS THAN 30" DEEP AND 30" WIDE SHALL BE PROVIDED IN FRONT OF THE CONTROL SIDE OF ANY APPLIANCE
- PER NEC SECTION R230.67 ALL SERVICES SUPPLYING DWELLING UNITS ARE REQUIRED TO BE PROVIDED WITH A TYPE 1 OR TYPE 2 SURGE-PROTECTIVE DEVICE.
- EACH DWELLING UNIT SHALL BE DESIGNED WITH PROVISION FOR FUTURE INSTALLATION OF ELECTRIC VEHICLE SUPPLY EQUIPMENT IN ACCORDANCE WITH RESIDENTIAL CODES RF103.1 AND RF103.3.
- ALL 125-VOLT THROUGH 250-VOLT RECEPTACLES INSTALLED IN LOCATIONS SPECIFIED IN 210.8 (A)(1) THROUGH (A)(11) AND SUPPLIED BY SINGLE-PHASE BRANCH CIRCUITS RATED 150 VOLTS OR LESS TO GROUND SHALL HAVE GFCI PROTECTION FOR PERSONNEL IN ACCORDANCE WITH NEC 210.8(A)
- FOR ONE AND TWO FAMILY DWELLING UNITS, ALL SERVICE CONDUCTORS SHALL TERMINATE IN DISCONNECTING MEANS HAVING A SHORT CIRCUIT CURRENT RATING EQUAL OR GREATER THAN THE AVAILABLE FAULT CURRENT, INSTALLED IN A READILY ACCESSIBLE OUTDOOR LOCATION IN ACCORDANCE WITH NEC 230.85

ABBREVIATIONS LEGEND

ABV	ABOVE
AC	AIR CONDITIONER
AFF	ABOVE FINISHED FLOOR
AHU	AIR HANDLER UNIT
BLK	BLOCK
CABS	CABINETS
CLG	CEILING
CHR	CHAIR RAIL
COFF	COFFERED
COL	COLUMN
COND	CONDENSER
CRN	CROWN MOULDING
CVAC	CENTRAL VACUUM SYSTEM
DBL	DOUBLE
DIAG	DIAGONAL
DR	DOOR
DRY	DRYER
DW	DISHWASHER
EB	EYEBROW
FL	FLOOR LINE (MAT. CHANGE)
FLR	FLOOR
FP	FIREPLACE
FXD	FIXED
FXT	FIXTURE
GLS	GLASS
HB	HOSE BIB
KS	KNEE SPACE
LAV	LAVATORY
LT	LAUNDRY TUB
MRBL	MARBLE
MC	MEDICINE CABINET
MIR	MIRROR
MTL	METAL
OH	OVERHEAD
OPNG	OPENING
OPT	OPTIONAL
R & S	CLOTHES ROD and SHELF
REF	REFRIGERATOR
SD	SOAP DISH
SDLTS	SIDE LIGHTS
SGD	SLIDING GLASS DOOR
SH (2)	SHELVES (QUANTITY)
SHWR	SHOWER
TB	TOWEL BAR
TPH	TOILET PAPER HOLDER
T&S	TUB and SHOWER
TEMP	TEMPERED
TR	TRANSOM
VOL	VOLUME
WC	WATER CLOSET
WD	WOOD
WH	WATER HEATER
WNCT	WAINSCOT
WS	WATER SOFTENER
WASH	WASHER

ROOF NOTES

- INSTALL ROOF VENTING PER MFR WRITTEN INSTRUCTIONS PER RESIDENTIAL CODE R806
- ALL OVERHANG DIMENSIONS ARE TO EDGE OF RAFTER. REFERENCE WALL SECTIONS/DETAILS FOR ALL OVERHANGS NOT DIMENSIONED.
- ALL UNDERLAYMENT MUST BE INSTALLED IN COMPLIANCE WITH RESIDENTIAL CODE R905.1.1
- EACH 4' OFF RIDGE VENT REQUIRES (1) 46" x 3" CUT OUT IN ROOF SHEATHING PER MFR WRITTEN INSTRUCTIONS
- ROOF VENTING MUST MAINTAIN A MIN. DISTANCE OF 4'-0" FROM CENTERLINE OF SEPARATION WALL.
- NO PENETRATIONS WITHIN 4'-0" OF RATED WALLS
- ALL ROOF PLANES GREATER THAN 4:12 PITCH REQUIRE (1) LAYER OF #30 FELT SECURED USING CORROSIVE RESISTANT FASTENERS PER RESIDENTIAL CODE TABLE R905.1.1

ROOF VENT CALCULATION

FORMULA:

1 SQUARE INCH VENT FOR EVERY 300 SQUARE INCHES OF CEILING
*144 SQ. IN. = 1 SQ. FT.
BLDG. CEILING (SF) x 144 = BLDG (SQ. IN.)
BLDG. (SQ. IN.) / 300 = SQ. IN. OF VENT REQUIRED
SQ. IN. OF VENT REQUIRED / 2 = 50% AT HIGH AND 50% AT LOW.

PER RESIDENTIAL CODE SECTION R806.2: 40% MIN, BUT NOT MORE THAN 50% OF VENTILATION MUST BE PROVIDED BY VENTILATORS LOCATED NO MORE THAN 3'-0" BELOW THE RIDGE OR HIGHEST POINT OF THE SPACE

BASIS OF CALCULATION: ("OR EQUAL" ACCEPTABLE)

(a) OFF RIDGE VENTS - STAMPCO W/ 36 SQ IN (NFVA) PER LINEAL FT

(b) SOFFIT VENTS - GP T3- 1/3" FULL VENT PERFORATED W/ 9.19 SQ IN (NFVA) PER LINEAL FT

CALCULATED LINEAL FOOT OF SOFFIT VENT SHALL NOT INCLUDE NON-VENTED FIRE RATED SOFFIT LOCATED LESS THAN 5' FROM PROPERTY LINE

EXTERIOR ELEVATION GENERAL NOTES

- FRONT ELEVATIONS TRIM, MOLDING, COLUMNS AND TRIM SHALL RECEIVE A PAINTED FINISH PER BLDR SPECS. SEE ELEVATION FOR DEPTH OR RAISED TRIM
- SIDE AND REAR ELEVATIONS TRIM AROUND WINDOWS AND DOORS MAY BE OPTIONAL PER COMMUNITY SPECS - SEE COMMUNITY SPECIFICATIONS OR CONSULT THE CONSTRUCTION MANAGER. ALL TRIM SHALL RECEIVE A PAINTED FINISH PER BLDR SPECS
- ROOF COVERING SEE COMMUNITY SPECIFICATIONS OR CONSULT THE CONSTRUCTION MANAGER. SEE STRUCTURAL SHEETS FOR SHEATHING REQUIREMENTS
- FLASHING SHALL BE INSTALLED AT WALL AND ROOF INTERSECTIONS, DECK AND WALL INTERSECTIONS, AT GUTTERS, AT ALL CHANGES IN ROOF SLOPE OR DIRECTION, AND AROUND ROOF OPENINGS
- WALL HEIGHTS VERIFY ALL BEARING WALL HEIGHTS WITH FINAL TRUSS LAYOUTS
- WATER-RESISTIVE BARRIERS PER R703.7.3, WATER-RESISTIVE BARRIERS SHALL BE INSTALLED AS REQUIRED IN SECTION R703.2 AND, WHERE APPLIED OVER WOOD-BASED SHEATHING, SHALL INCLUDE A WATER-RESISTIVE VAPOR-PERMEABLE BARRIER WITH A PERFORMANCE AT LEAST EQUIVALENT TO TWO LAYERS OF GRADE D PAPER. THE INDIVIDUAL LAYERS SHALL BE INSTALLED INDEPENDENTLY SUCH THAT EACH LAYER PROVIDES A SEPARATE CONTINUOUS PLANE AND ANY FLASHING (INSTALLED IN ACCORDANCE WITH SECTION R703.4) INTENDED TO DRAIN TO THE WATER-RESISTIVE BARRIER IS DIRECTED BETWEEN THE LAYERS

GENERAL NOTES

- ALL CONSTRUCTION SHALL MEET THE LATEST EDITION OF CODES ADOPTED BY THE LOCAL GOVERNING AGENCIES
- PER RESIDENTIAL CODE R302.5 NO OPENINGS FROM A PRIVATE GARAGE ARE PERMITTED DIRECTLY INTO SLEEPING AREAS. ALL OPENINGS SHALL HAVE SOLID WOOD, INSULATED STEEL OR 20 MIN. FIRE RATED DOORS NOT LESS THAN 1-3/8 INCHES THICKNESS. ALL DUCTS IN THE GARAGE OR PENETRATING THE WALL OR CEILING SEPARATING THE GARAGE AND DWELLING SHALL BE CONSTRUCTED OF MIN. 26 GA. SHEET METAL, 1 INCH MINIMUM RIGID CLASS 0 OR 1 DUCT BOARD, OR OTHER APPROVED MATERIAL AND SHALL HAVE NO OPENINGS INTO THE GARAGE
- PER RESIDENTIAL CODE TABLE R302.6 GARAGE SHALL BE SEPARATED FROM RESIDENCE AND IT'S ATTIC W/ MIN. 1/2" GYP BOARD ATTACHED IN ACCORDANCE WITH TABLE R702.3.5. HABITABLE ROOMS SHALL BE SEPARATED FROM ROOM ABOVE W/ MIN 5/8" TYPE "X" GYP BOARD, WHERE THE SEPARATION IS A FLOOR-CEILING ASSEMBLY. ANY STRUCTURE SUPPORTING THE ASSEMBLY SHALL BE PROTECTED W MIN 1/2" GYP BOARD
- PER RESIDENTIAL CODE R309.1 GARAGE AND CARPORT FLOOR SURFACE AREAS USED FOR PARKING OF AUTOMOBILES OR OTHER VEHICLES SHALL BE SLOPED TO FACILITATE THE MOVEMENT OF LIQUIDS TO A DRAIN OR TOWARDS THE MAIN VEHICLE ENTRY DOORWAY
- PER RESIDENTIAL CODE R312.1 PORCHES, BALCONIES OR RAISED FLOOR SURFACES LOCATED MORE THAN 30" ABOVE FINISHED FLOOR OR GRADE SHALL HAVE GUARDS NOT LESS THAN 36" IN HEIGHT. PER RESIDENTIAL CODE R312.1.2 OPEN SIDES OF STAIRS WITH A TOTAL RISE OF MORE THAN 30" ABOVE FINISHED FLOOR OR GRADE SHALL HAVE GUARDS NOT LESS THAN 34" IN HEIGHT MEASURED VERTICALLY FROM THE NOSING OF THE TREADS
- PER RESIDENTIAL CODE R312.1.3 REQUIRED GUARDS ON OPEN SIDES OF STAIRWAYS, RAISED FLOOR AREAS, BALCONIES AND PORCHES SHALL HAVE INTERMEDIATE RAILS OR ORNAMENTAL CLOSURES WHICH DO NOT ALLOW PASSAGE OF A SPHERE 4" OR MORE IN DIAMETER
- PER RESIDENTIAL CODE R308.4.5 GLAZING IN WALLS, ENCLOSURES OR FENCES CONTAINING, FACING, OR ADJACENT TO HOT TUBS, SPAS, WHIRLPOOLS, SAUNAS, STEAM ROOMS, BATHTUBS, SHOWERS AND INDOOR OR OUTDOOR SWIMMING POOLS WHERE THE BOTTOM EXPOSED EDGE OF THE GLAZING IS LESS THAN 60 INCHES MEASURED VERTICALLY ABOVE ANY STANDING OR WALKING SURFACE, SHALL BE CONSIDERED A HAZARDOUS LOCATION. G.C. TO VERIFY IF HOMEOWNER SELECTS ANY OF THESE ITEMS LISTED, IF ANY OF THESE ITEMS LISTED IS INSTALLED, SUCH GLAZING FACING THOSE ITEMS IS TO BE TEMPERED
- PER RESIDENTIAL CODE R312.2, PROVIDE WINDOW FALL PROTECTION IN ACCORDANCE WITH R312.2.1 AND R312.2.2
- GAS OPT. PER COMMUNITY. VERIFY WITH BLDR
- C.J. = RECOMMENDED MASONRY CONTROL JOINT LOCATION
- ALL FINISHES, MATERIALS, HOUSEWRAP, WINDOW AND DOOR FLASHING, TAPING AND SEALANTS TO BE INSTALLED PER BUILDER PROVIDED SPECIFICATIONS OR MFR WRITTEN INSTRUCTIONS
- ALL FINISH DETAILS & TYPICAL PLAN NOTES PROVIDED BY BUILDER IN ACCORDANCE WITH TYPICAL BUILDER SPECIFICATIONS
- REFER TO STRUCTURAL ENGINEERING DRAWINGS FOR ALL EXTERIOR WALL STUD SPECIES, SIZES AND SPACING
- PER RESIDENTIAL CODE R302.12 IN COMBUSTIBLE CONSTRUCTION WHERE THERE IS USEABLE SPACE BOTH ABOVE AND BELOW THE CONCEALED SPACE OF A FLOOR/CEILING ASSEMBLY, DRAFT STOPS SHALL BE INSTALLED SO THAT THE AREA OF THE CONCEALED SPACE DOES NOT EXCEED 1,000 SQUARE FEET. DRAFT STOPPING SHALL DIVIDE THE CONCEALED SPACE INTO APPROXIMATELY EQUAL AREAS AND INSTALLED PER RESIDENTIAL CODE R302.12 & R302.12.1

*STAIR NOTES:
ACTUAL DIMENSIONS WILL VARY DEPENDING ON FIELD CONDITIONS, FLOOR COVERINGS, AND/OR VARIANCES IN CONSTRUCTION MATERIAL. ACTUAL CONSTRUCTION MUST COMPLY W/ R311.7 OF THE RESIDENTIAL CODE.
MAXIMUM RISER HEIGHT: 7-3/4"
MINIMUM TREAD DEPTH: 10" (NOT INCLUDING NOSING)
MAXIMUM TREAD DEPTH: 12" (INCLUDING NOSING)
MAXIMUM RISER HEIGHT VARIATION: 3/8" (ENTIRE FLIGHT)
MINIMUM STAIR WIDTH: 36"
MINIMUM HEADROOM CLEARANCE: 6'-8" (ABOVE NOSING)

*HANDRAIL NOTES:
ACTUAL CONSTRUCTION MUST COMPLY W/ R311.7.8 OF THE RESIDENTIAL CODE.
HANDRAILS SHALL NOT BE LESS THAN 34" OR MORE THAN 38" IN HEIGHT ABOVE THE STAIR NOSING.
HANDRAILS SHALL BE CONTINUOUS PER FLIGHT OF STAIRS.
HANDRAILS SHALL BE 1 1/2" CLEAR OF ALL ADJACENT FINISH MATERIALS AND ENDS SHALL RETURN TO WALL OR TERMINATE IN NEWEL POSTS OR SAFE TERMINALS.
HANDRAILS SHALL BE 1 1/4"-2" IN CROSS SECTIONAL DIMENSION, OR APPROVED EQUIVALENT, AND EDGES SHALL HAVE A MIN. RADIUS OF 0.01".
HANDRAIL CONSTRUCTION SHALL BE ABLE TO RESIST A LOAD OF 200 LBS APPLIED IN ANY DIRECTION AT ANY POINT ALONG THE TOP RAIL.

STAIR AND RAILING SUPPLIER INSTALLER SHALL SATISFY ALL BUILDING DEPARTMENT APPROVAL REQUIREMENTS FOR THE PRODUCTS THEY PROVIDE OR INSTALL.

OPEN RAILS SHALL HAVE INTERMEDIATE RAILS OR AN ORNAMENTAL PATTERN SUCH THAT A 4" DIAMETER SPHERE CANNOT PASS THROUGH.

THE GUARDRAIL CONSTRUCTION SHALL BE ABLE TO RESIST A LOAD OF 50 LBS PER LINEAL FOOT APPLIED HORIZONTALLY ALONG THE TOP RAIL, PER RESIDENTIAL CODE 1607.9.1 & ASCE 7 SECTION 4.5.1.

GUARDRAILS SHALL NOT BE LESS THAN 36" IN HEIGHT.

THE TRIANGULAR OPENINGS AT STAIR TREAD, RISER, & BOTTOM SHALL BE SUCH THAT A 6" DIAMETER SPHERE CANNOT PASS THROUGH.

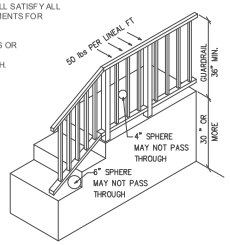

TYP STAIR DETAIL
N.T.S.

STAIR NOTES

1. EQUAL RISERS NOT TO EXCEED 7 3/4" EQUAL TREADS AT 10" W/ 1" NOSING EA (TOTAL TREAD DEPTH TO BE 11" MIN)
2. TREADS SHALL BE 2x12's GLUED AND NAILED, (RIPPED DOWN AS REQUIRED)
3. RISERS SHALL BE 1x8's GLUED AND NAILED (RIPPED DOWN AS REQUIRED)
4. LANDINGS SHALL BE CONSTRUCTED OF 2x8's @16" OC AND DECKED W/ 3/4" T&G PLYWOOD, GLUED AND NAILED
5. STRINGERS SHALL BE 2x12's EQUALLY SPACED (TYP)
6. WINDER TREADS SHALL COMPLY WITH RESIDENTIAL CODE R311.7.5.1 INCLUDING MINIMUM 6" TREAD DEPTH

TERMITE SPECIFICATIONS

SECTION R318 PROTECTION AGAINST TERMITES

TERMITE PROTECTION SHALL BE PROVIDED BY REGISTERED TERMITICIDES, INCLUDING SOIL APPLIED PESTICIDES, BAITING SYSTEMS, AND PESTICIDES APPLIED TO WOOD, OR OTHER APPROVED METHODS OF TERMITE PROTECTION LABELED FOR USE A PREVENTIVE TREATMENT TO NEW CONSTRUCTION (SEE SECTION 202, REGISTERED TERMITICIDE). UPON COMPLETION OF THE APPLICATION OF THE TERMITE PROTECTIVE TREATMENT, A CERTIFICATE OF COMPLIANCE SHALL BE ISSUED TO THE BUILDING DEPARTMENT BY THE LICENSED PEST CONTROL COMPANY THAT CONTAINS THE FOLLOWING STATEMENT: "THE BUILDING HAS RECEIVED A COMPLETE TREATMENT FOR THE PREVENTION OF SUBTERRANEAN TERMITES. TREATMENT IS IN ACCORDANCE WITH RULES AND LAWS ESTABLISHED BY THE FLORIDA DEPARTMENT OF AGRICULTURE AND CONSUMER SERVICES."

NOTE:
1. METHOD OF TREATMENT SHALL BE APPROVED BY THE GOVERNING JURISDICTION "LIQUID BORATE OR BORA-CARE" PRODUCT METHODS MUST BE DETERMINED AT PERMIT STAGE AND PRODUCT APPROVAL DATA MUST BE ON FILE WITH THE BUILDING DEPARTMENT.
2. PRESSURE TREATED LUMBER THAT HAS BEEN CUT OR DRILLED THAT EXPOSES UNTREATED PORTIONS OF WOOD ARE REQUIRED TO BE FIELD TREATED TO PREVENT INSECT INFESTATION.
3. OPTIONAL BORATE APPLIED TO ALL FRAME MEMBERS MIN. 24" AFF

tds
true design studios
4745 SUTTON PARK CT., SUITE 402
JACKSONVILLE, FLORIDA 32224
P 904.821.5200 F 904.992.8700
WWW.TRUEDESIGNSTUDIOS.NET

DREAM FINDERS
THE MARK OF A QUALITY HOME

360 Corporate Way
Orange Park, FL 32073
www.dreamfindershomes.com

STADIUM - 19
2406 PLAN
ELEVATION B

1310 LIBERTY ST NORTH
JACKSONVILLE, FL

PROJECT NO: 2024.010319
DATE: 11-20-24
DRAWN: JC
CHKD: DWR

REVISIONS:
06-06-25 - PRC - JC

A000

DO NOT SCALE THESE DRAWINGS - DRAWING SCALE IS 50% OF DESIGNATED SCALE IF PRINTED ON 11"x17" MEDIA

NOT ISSUED FOR CONSTRUCTION 00-00-0000

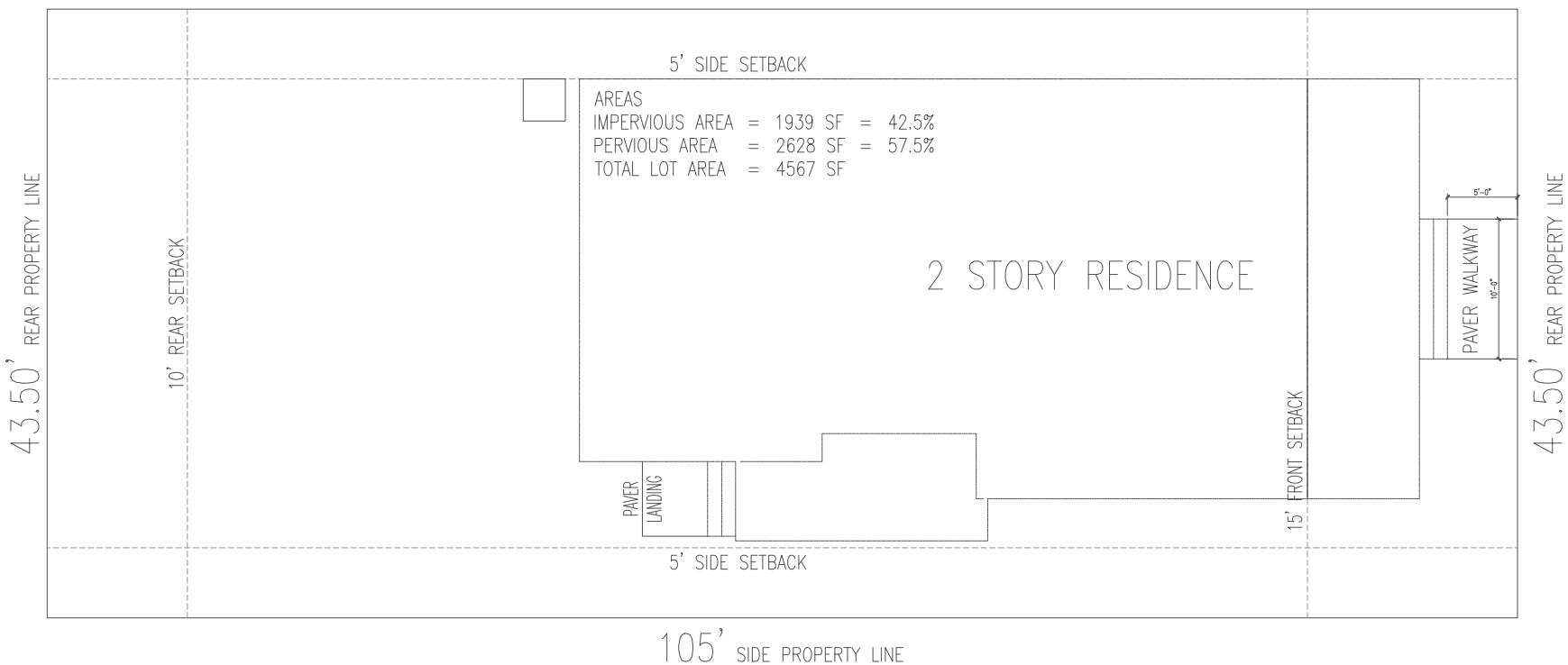

ARCHITECTURAL SITE PLAN

SCALE: ¼" = 1'-0"

tds
true design studios
4745 SUTTON PARK CT., SUITE 402
JACKSONVILLE, FLORIDA 32224
P 904.821.5200 F 904.992.8700
WWW.TRUEDESIGNSTUDIOS.NET

DREAM FINDERS
THE MARK OF A QUALITY HOME
360 Corporate Way
Orange Park, FL 32073
www.dreamfindershomes.com

STADIUM - 19
2406 PLAN
ELEVATION B

1310 LIBERTY ST NORTH
JACKSONVILLE, FL

PROJECT NO: 2024.010319
DATE: 11-20-24
DRAWN: JC
CHKD: DWR
REVISIONS:
06-06-25 - PRC - JC

A010

DO NOT SCALE THESE DRAWINGS - DRAWING SCALE IS 50% OF DESIGNATED SCALE IF PRINTED ON 11"x17" MEDIA

NOT ISSUED FOR CONSTRUCTION 00-00-0000

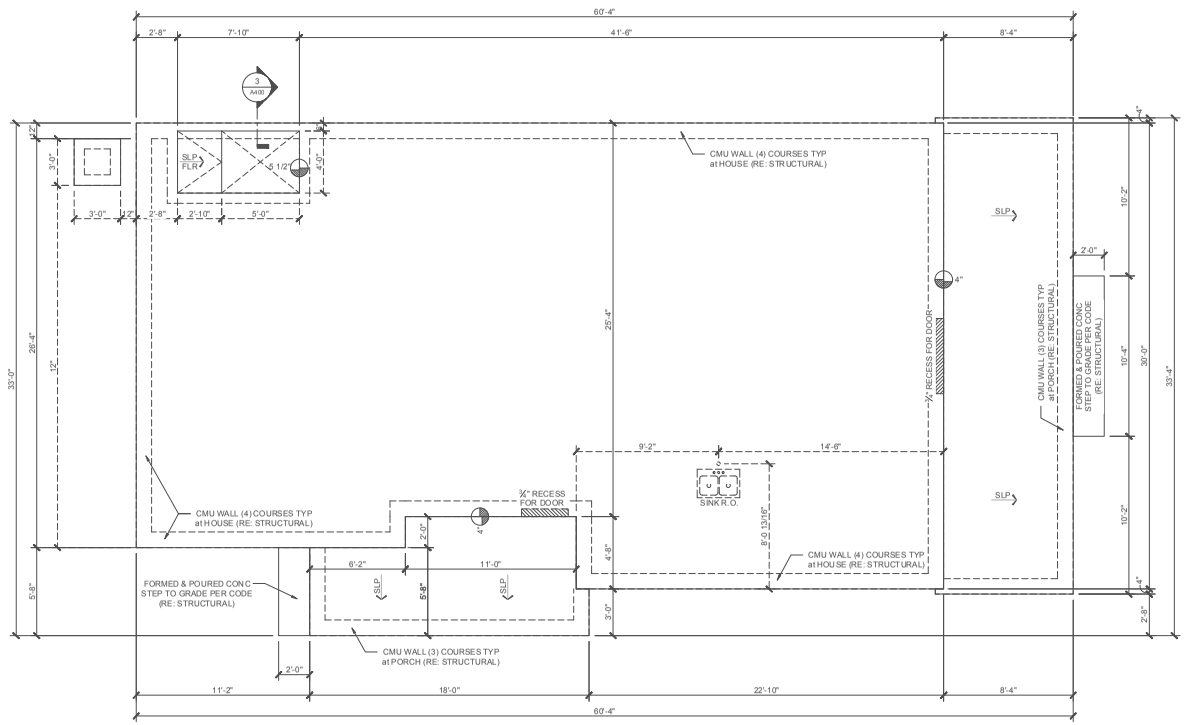

ARCHITECTURAL FOUNDATION PLAN

SCALE: ¼" = 1'-0"

tds
true design studios
4745 SUTTON PARK CT., SUITE 402
JACKSONVILLE, FLORIDA 32224
P 904.821.5200 F 904.992.8700
WWW.TRUEDESIGNSTUDIOS.NET

DREAM FINDERS
THE MARK OF A QUALITY HOME

360 Corporate Way
Orange Park, FL 32073
www.dreamfindershomes.com

STADIUM - 19
2406 PLAN
ELEVATION B

1310 LIBERTY ST NORTH
JACKSONVILLE, FL

PROJECT NO: 2024.010319
DATE: 11-20-24
DRAWN: JC
CHKD: DWR
REVISIONS:
06-06-25 - PRC - JC

A100

DO NOT SCALE THESE DRAWINGS - DRAWING SCALE IS 50% OF DESIGNATED SCALE IF PRINTED ON 11"x17" MEDIA

NOT ISSUED FOR CONSTRUCTION 00-00-0000

COA-24-31703
514
Exhibit B
Page 4 of 16

COASTAL-2

AREAS	SQ. FT.
1ST FLOOR	1462
2ND FLOOR	994
TOTAL LIVING	2456
BALCONY	240
COVERED PORCH	113
ENTRY	240
TOTAL NON-LIVING	593
TOTAL UNDER ROOF	3049

VOLUME	CU. FT.
1ST FLOOR	13,295
2ND FLOOR	8,045
TOTAL LIVING	21,340

NOTE TO FRAMER:
REFER TO STRUCTURAL ENGINEERING DRAWINGS FOR ALL EXTERIOR WALL STUD SPECIES, SIZES AND SPACING.

NOTE TO CONTRACTOR:
INSTALL ALL HOUSEWRAP, WINDOW AND DOOR FLASHING, TAPING AND SEALANTS PER MFR WRITTEN INSTRUCTIONS

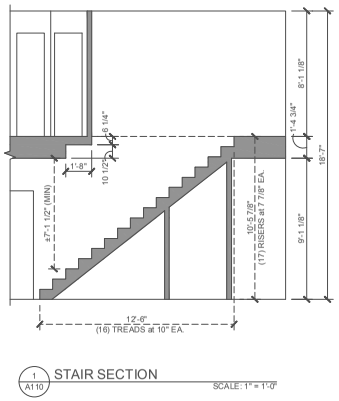

1 A110 STAIR SECTION
SCALE: 1" = 1'-0"

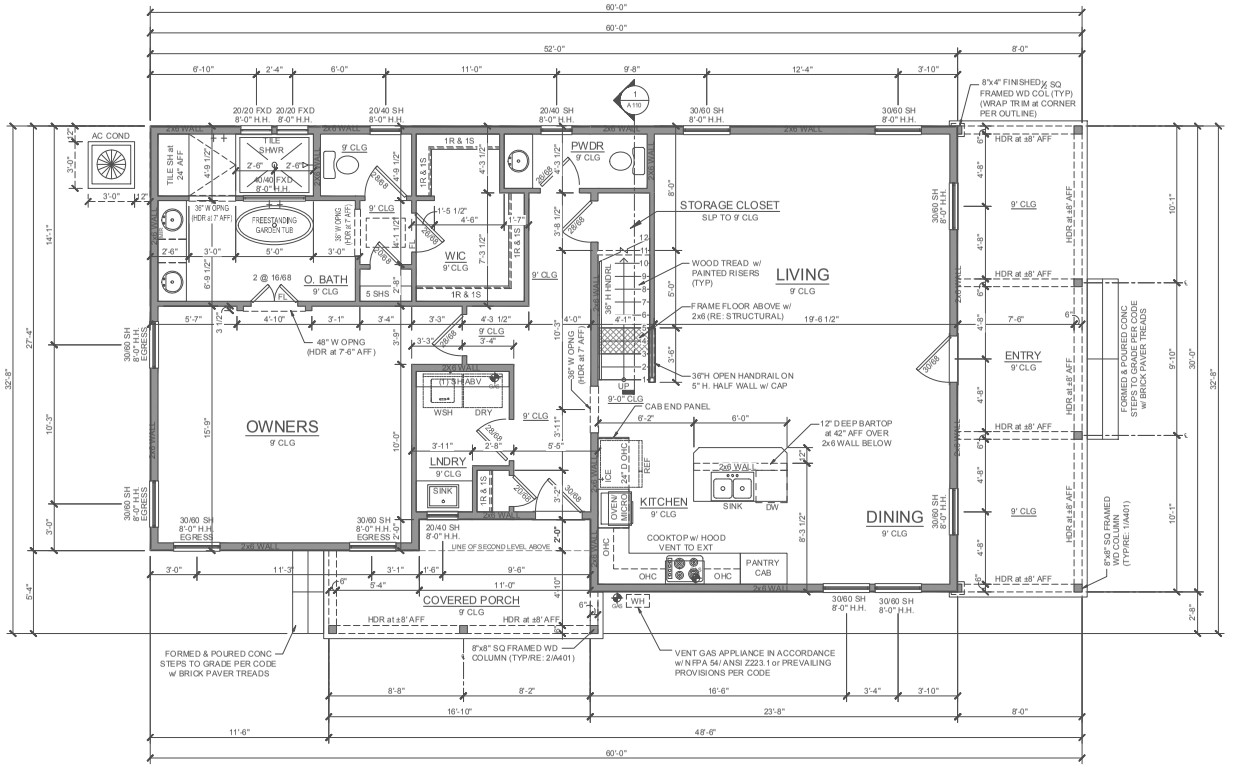

1st LEVEL FLOOR PLAN

SCALE: ¼" = 1'-0"

tds
true design studios
4745 SUTTON PARK CT., SUITE 402
JACKSONVILLE, FLORIDA 32224
P 904.821.9200 F 904.992.8700
WWW.TRUEDESIGNSTUDIOS.NET

DREAM FINDERS
THE MARK OF A QUALITY HOME

360 Corporate Way
Orange Park, FL 32073
www.dreamfindershomes.com

STADIUM - 19
2406 PLAN
ELEVATION B

DO NOT SCALE THESE DRAWINGS - DRAWING SCALE IS 50% OF DESIGNATED SCALE IF PRINTED ON 11"x17" MEDIA

1310 LIBERTY ST NORTH
JACKSONVILLE, FL

PROJECT NO:	2024.010319
DATE:	11-20-24
DRAWN:	JC
CHKD:	DWR

REVISIONS:
06-06-25 - PRC - JC

NOT ISSUED FOR CONSTRUCTION 00-00-0000

A110

MAIN STAIR NOTES

1. (16) EQUAL RISERS AT 7 11/16" EA
   (17) EQUAL TREADS AT 10" W/ 1" NOSING EA
   (TOTAL TREAD DEPTH TO BE 11" MIN)
2. TREADS SHALL BE 2x12's GLUED and NAILED (RIPPED DOWN AS REQUIRED)
3. RISERS SHALL BE 1x8's GLUED and NAILED (RIPPED DOWN AS REQUIRED)
4. LANDINGS SHALL BE CONSTRUCTED OF 2x8's @ 16" OC and DECKED W/ 3/4" T&G PLYWOOD GLUED and NAILED
5. STRINGERS SHALL BE 2x12's EQUALLY SPACED (TYP)

NOTE TO FRAMER:
REFER TO STRUCTURAL ENGINEERING DRAWINGS FOR ALL EXTERIOR WALL STUD SPECIES, SIZES AND SPACING.

NOTE TO CONTRACTOR:
INSTALL ALL HOUSEWRAP, WINDOW AND DOOR FLASHING, TAPING AND SEALANTS PER MFR WRITTEN INSTRUCTIONS

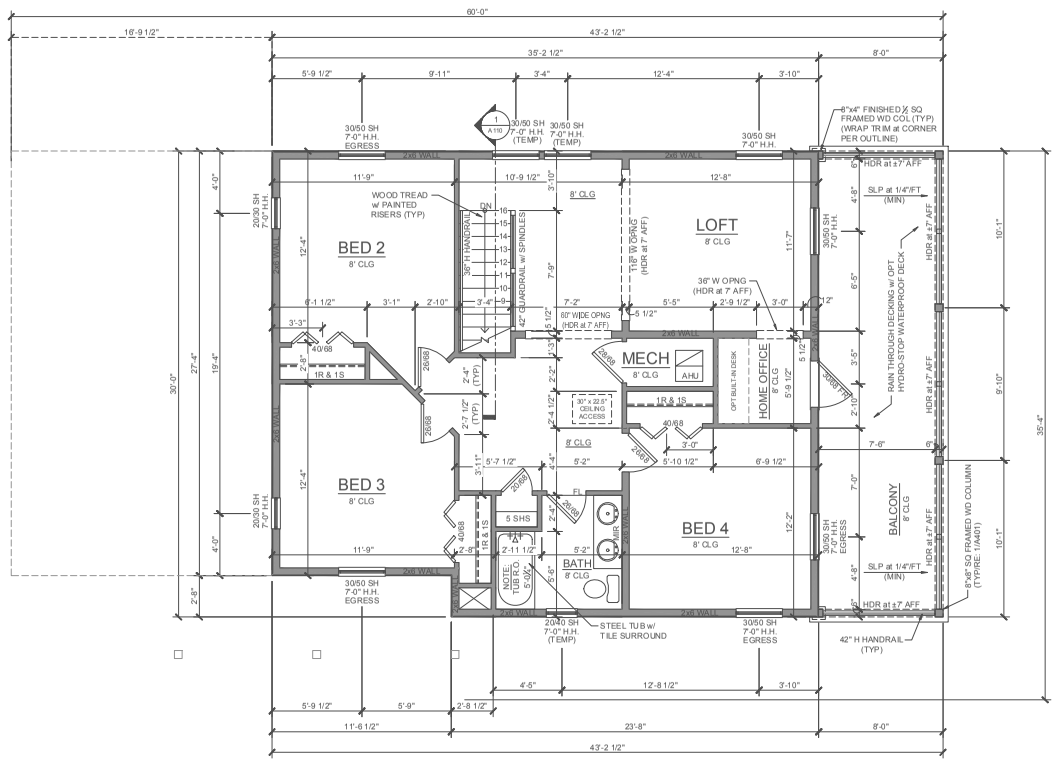

2nd LEVEL FLOOR PLAN

SCALE: ¼" = 1'-0"

tds
true design studios
4745 SUTTON PARK CT., SUITE 402
JACKSONVILLE, FLORIDA 32224
P 904.821.5200 F 904.992.8700
WWW.TRUEDESIGNSTUDIOS.NET

DREAM FINDERS
THE MARK OF A QUALITY HOME

360 Corporate Way
Orange Park, FL 32073
www.dreamfindershomes.com

STADIUM - 19
2406 PLAN
ELEVATION B

1310 LIBERTY ST NORTH
JACKSONVILLE, FL

PROJECT NO: 2024.010319
DATE: 11-20-24
DRAWN: JC
CHKD: DWR
REVISIONS:
06-06-25 - PRC - JC

A120

DO NOT SCALE THESE DRAWINGS - DRAWING SCALE IS 50% OF DESIGNATED SCALE IF PRINTED ON 11"x17" MEDIA

NOT ISSUED FOR CONSTRUCTION 00-00-0000

COA-24-31703

ROOF VENT CALCULATION

FORMULA:

1 SQUARE INCH VENT FOR EVERY 300 SQUARE INCHES OF CEILING
*144 SQ IN = 1 SQ FT
BLDG CEILING (SQ FT) x 144 = BLDG (SQ IN)
BLDG (SQ IN) / 300 = SQ IN OF VENT REQUIRED
SQ IN OF VENT REQUIRED / 2 = 50% AT HIGH AND 50% AT LOW

PER FBC SECTION R806.2: 40% MIN, BUT NOT MORE THAN 50% OF VENTILATION MUST BE PROVIDED BY VENTILATORS LOCATED A MIN 3'-0" ABOVE EAVE

BASIS OF CALCULATION:

(a) OFF RIDGE VENTS - STAMPCO W/ 36 SQ IN (NFVA) PER LINEAL FT

(b) SOFFIT VENTS - GP T3-1/3" FULL VENT PERFORATED W/ 9.19 SQ IN (NFVA) PER LINEAL FT

ROOF VENT CALCULATION

	AREA (SQ FT)	REQUIRED		PROVIDED			
		HIGH (SQ IN)	LOW (SQ IN)	VENTS	HIGH (SQ IN)	LINEAL FT	LOW (SQ IN)
A	1254	300.96	300.96	2	288.00	116	1066.04
B	635	152.40	152.40	1	144.00	80	735.20
HIGH: (1) 4" VENT = 144 SQ IN				LOW: (1) LINEAL FT = 9.19 SQ IN			

GENERAL NOTES

1. INSTALL ROOF VENTING PER MFR WRITTEN INSTRUCTIONS PER FBC SECTION R806
2. ROOF VENTING MUST MAINTAIN A MIN DISTANCE OF 4'-0" FROM CENTERLINE OF SEPARATION WALL. IF POSSIBLE LOCATE VENTS IN AN INCONSPICUOUS LOCATION NOT VIEWABLE FROM FRONT OR SIDE ELEVATIONS
3. ALL ROOF PLANES AT LESS THAN 4:12 PITCH REQUIRE (2) LAYERS OF #15 FELT or #30 FELT SECURED USING CORROSIVE RESISTANT FASTENERS PER FBC TABLE R905.1.1
4. ALL ROOF PLANES GREATER THAN 4:12 PITCH REQUIRE (1) LAYER OF #30 FELT SECURED USING CORROSIVE RESISTANT FASTENERS PER FBC TABLE R905.1.1
5. ALL UNDERLAYMENT MUST BE INSTALLED IN COMPLIANCE WITH FBC R905.1.1

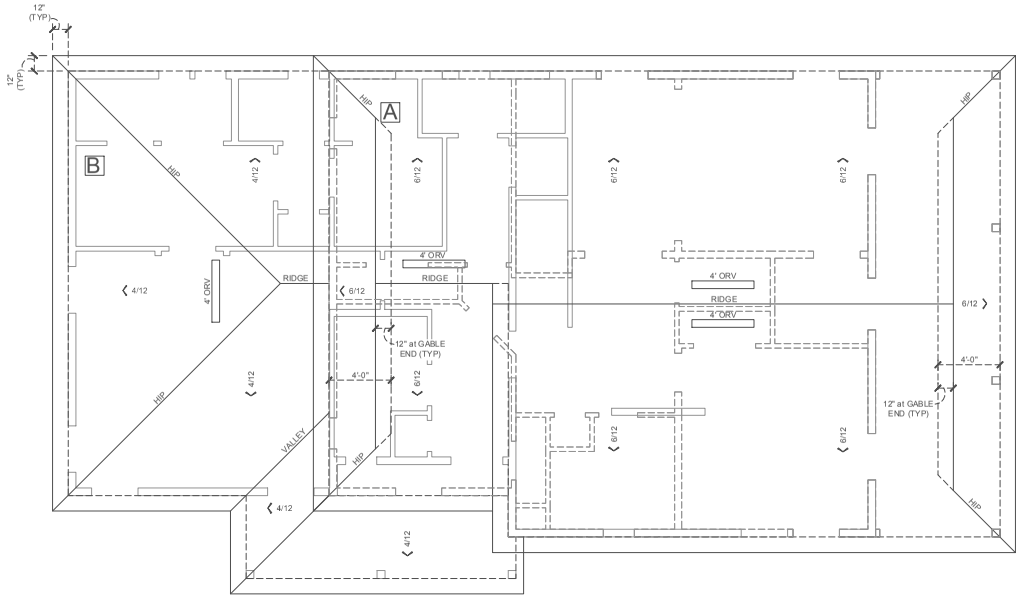

ROOF PLAN

SCALE: ¼" = 1'-0"

tds
true design studios
4745 SUTTON PARK CT., SUITE 402
JACKSONVILLE, FLORIDA 32224
P 904.821.9200 F 904.992.8700
WWW.TRUEDESIGNSTUDIOS.NET

DREAM FINDERS
THE MARK OF A QUALITY HOME

360 Corporate Way
Orange Park, FL 32073
www.dreamfindershomes.com

STADIUM - 19
2406 PLAN
ELEVATION B

DO NOT SCALE THESE DRAWINGS - DRAWING SCALE IS 50% OF DESIGNATED SCALE IF PRINTED ON 11"x17" MEDIA

1310 LIBERTY ST NORTH
JACKSONVILLE, FL

PROJECT NO: 2024.010319
DATE: 11-20-24
DRAWN: JC
CHKD: DWR

REVISIONS:
06-06-25 - PRC - JC

A160

NOT ISSUED FOR CONSTRUCTION 00-00-0000

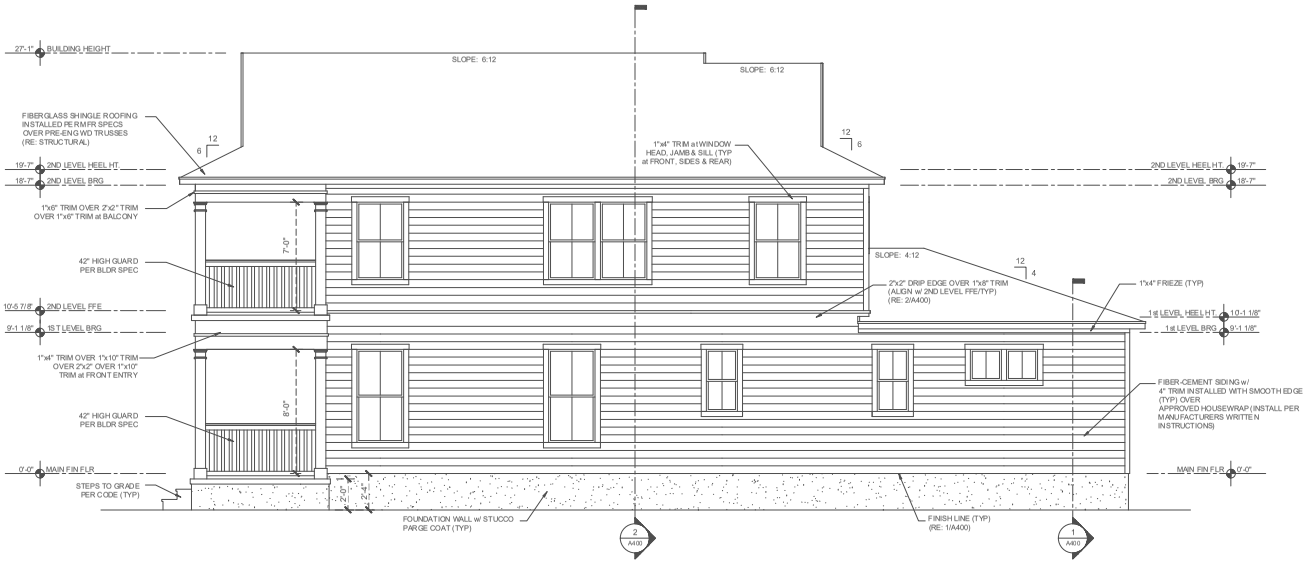

RIGHT ELEVATION

SCALE: ¼" = 1'-0"

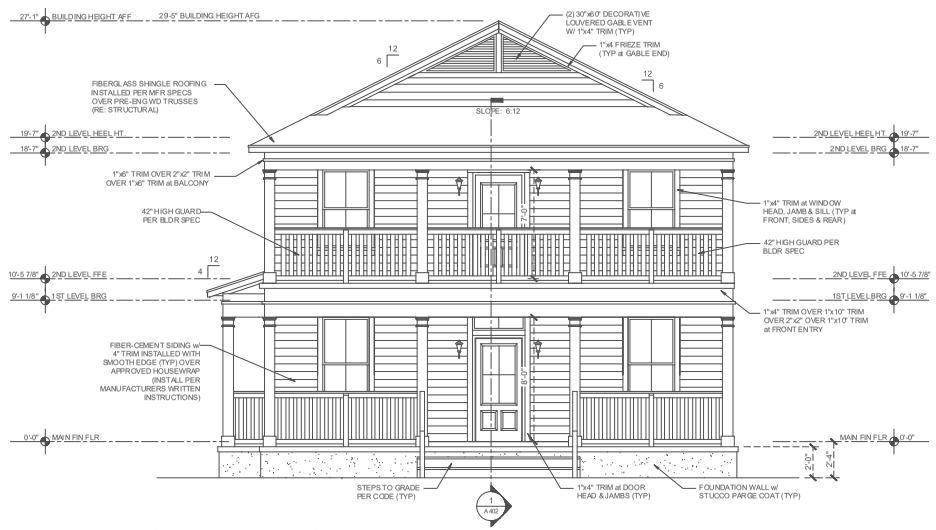

FRONT ELEVATION

SCALE: ¼" = 1'-0"

tds
true design studios
4745 SUTTON PARK CT., SUITE 402
JACKSONVILLE, FLORIDA 32224
P 904.821.5200 F 904.992.8700
WWW.TRUEDESIGNSTUDIOS.NET

DREAM FINDERS HOMES
THE MARK OF A QUALITY HOME

360 Corporate Way
Orange Park, FL 32073
www.dreamfindershomes.com

STADIUM - 19
2406 PLAN
ELEVATION B

1310 LIBERTY ST NORTH
JACKSONVILLE, FL

PROJECT NO: 2024.010319
DATE: 11-20-24
DRAWN: JC
CHKD: DWR

REVISIONS:
06-06-25 - PRC - JC

A200

DO NOT SCALE THESE DRAWINGS - DRAWING SCALE IS 50% OF DESIGNATED SCALE IF PRINTED ON 11"x17" MEDIA
NOT ISSUED FOR CONSTRUCTION 00-00-0000

LEFT ELEVATION

SCALE: ¼" = 1'-0"

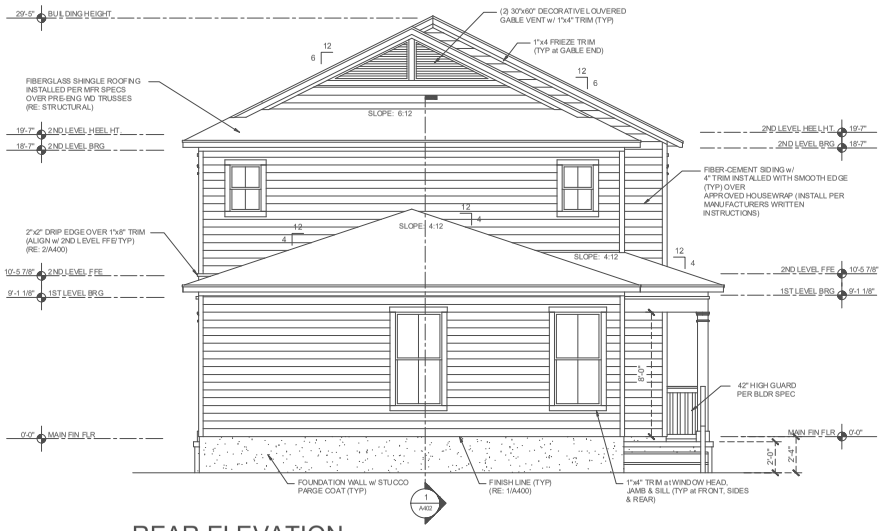

REAR ELEVATION

SCALE: ¼" = 1'-0"

tds
true design studios
4745 SUTTON PARK CT., SUITE 402
JACKSONVILLE, FLORIDA 32224
P 904.821.5200 F 904.992.8700
WWW.TRUEDESIGNSTUDIOS.NET

DREAM FINDERS HOMES
THE MARK OF A QUALITY HOME

360 Corporate Way
Orange Park, FL 32073
www.dreamfindershomes.com

STADIUM - 19
2406 PLAN
ELEVATION B

1310 LIBERTY ST NORTH
JACKSONVILLE, FL

PROJECT NO:	2024.010319
DATE:	11-20-24
DRAWN:	JC
CHKD:	DWR

REVISIONS:
06-06-25 - PRC - JC

A201

DO NOT SCALE THESE DRAWINGS - DRAWING SCALE IS 50% OF DESIGNATED SCALE IF PRINTED ON 11"x17" MEDIA
NOT ISSUED FOR CONSTRUCTION 00-00-0000

COA-24-31703

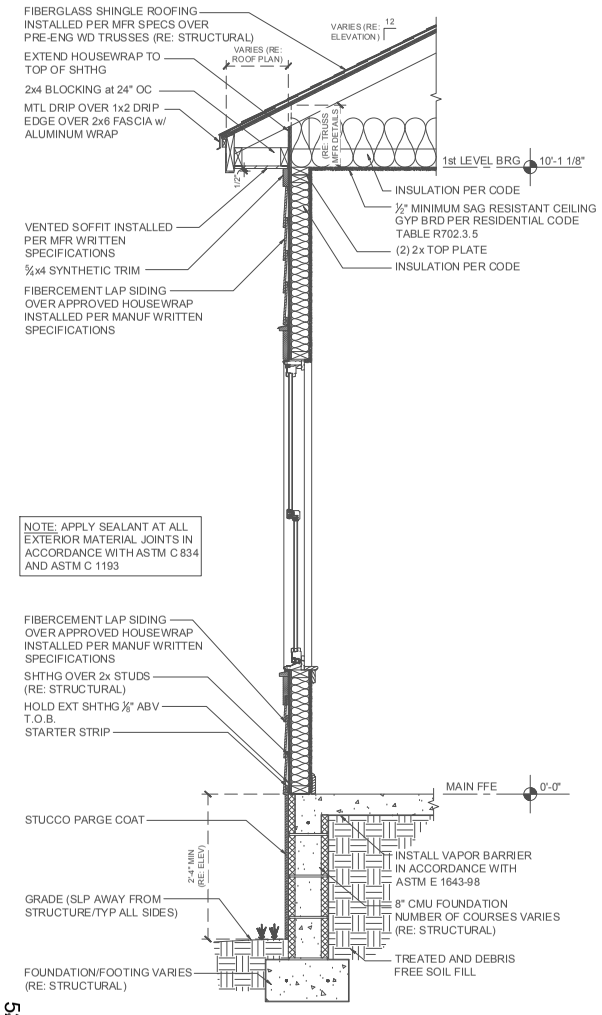

1 A400 WALL SECTION

SCALE: 1" = 1'-0"

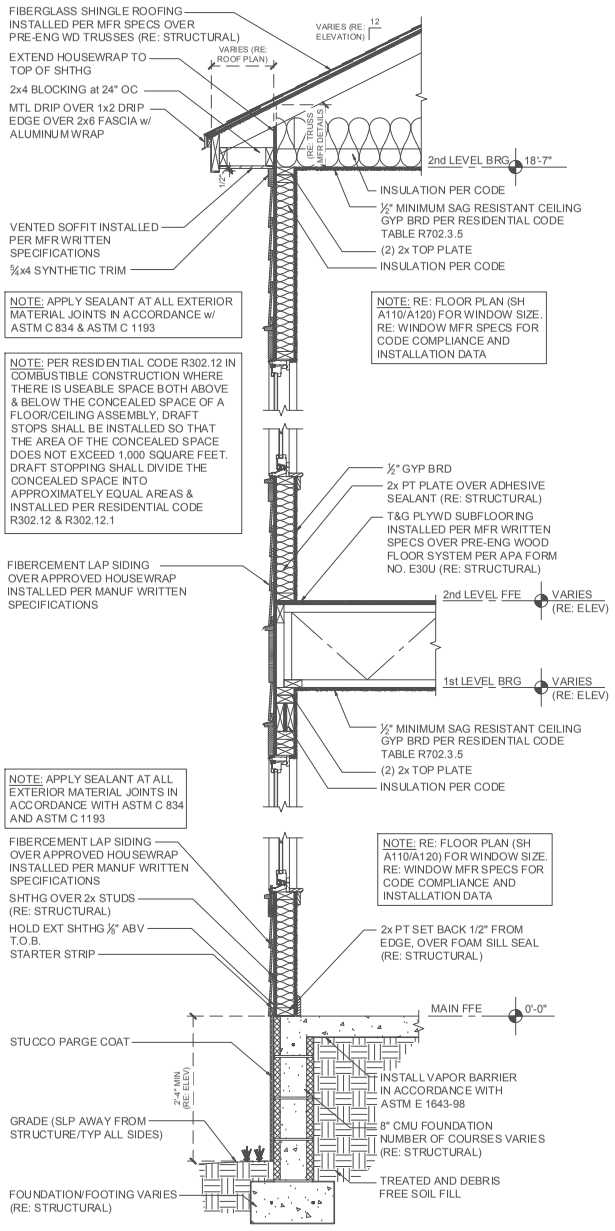

2 A400 TYP TWO-STORY WALL SECTION

SCALE: 1" = 1'-0"

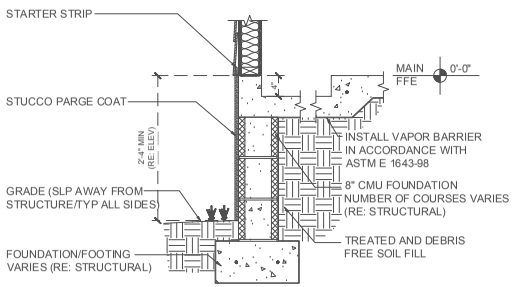

3 A400 PARTIAL RECESSED SHOWER DETAIL

SCALE: 1" = 1'-0"

tds
true design studios
4745 SUTTON PARK CT., SUITE 402
JACKSONVILLE, FLORIDA 32224
P 904.821.5200 F 904.992.8700
WWW.TRUEDESIGNSTUDIOS.NET

DREAM FINDERS
THE MARK OF A QUALITY HOME

360 Corporate Way
Orange Park, FL 32073
www.dreamfindershomes.com

STADIUM - 19
2406 PLAN
ELEVATION B

DO NOT SCALE THESE DRAWINGS - DRAWING SCALE IS 50% OF DESIGNATED SCALE IF PRINTED ON 11"x17" MEDIA

1310 LIBERTY ST NORTH
JACKSONVILLE, FL

PROJECT NO:	2024.010319
DATE:	11-20-24
DRAWN:	JC
CHKD:	DWR

REVISIONS:
06-06-25 - PRC - JC

A400

NOT ISSUED FOR CONSTRUCTION 00-00-0000

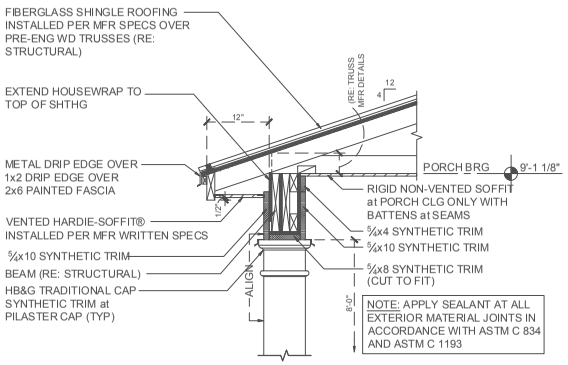

1 A401 COVERED PORCH SECTION

SCALE: 1" = 1'-0"

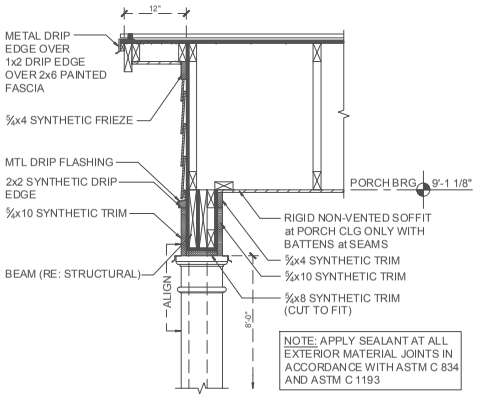

2 A401 COVERED PORCH RAKE SECTION

SCALE: 1" = 1'-0"

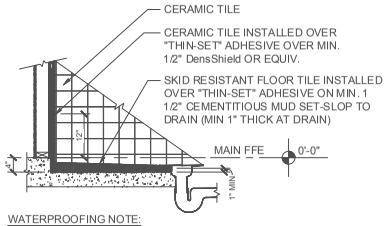

WATERPROOFING NOTE:
INSTALL JOINT MESH IN CORNERS AND SEAMS OF WALL BOARDS WITH "HYDROGUARD" WATER PROOFING OR EQUIV. COVER ALL SCREW HOLES AND PENETRATIONS WITH WATERPROOFING CAULK ALL CORNERS & JOINTS OF DISSIMILAR MATERIALS.

RECESSED SHOWER DETAIL

tds
true design studios
4745 SUTTON PARK CT., SUITE 402
JACKSONVILLE, FLORIDA 32224
P 904.821.5200 F 904.992.8700
WWW.TRUEDESIGNSTUDIOS.NET

DREAM FINDERS
THE MARK OF A QUALITY HOME

360 Corporate Way
Orange Park, FL 32073
www.dreamfindershomes.com

STADIUM - 19
2406 PLAN
ELEVATION B

1310 LIBERTY ST NORTH
JACKSONVILLE, FL

PROJECT NO: 2024.010319
DATE: 11-20-24
DRAWN: JC
CHKD: DWR

REVISIONS:
06-06-25 - PRC - JC

A401

DO NOT SCALE THESE DRAWINGS - DRAWING SCALE IS 50% OF DESIGNATED SCALE IF PRINTED ON 11"x17" MEDIA
NOT ISSUED FOR CONSTRUCTION 00-00-0000

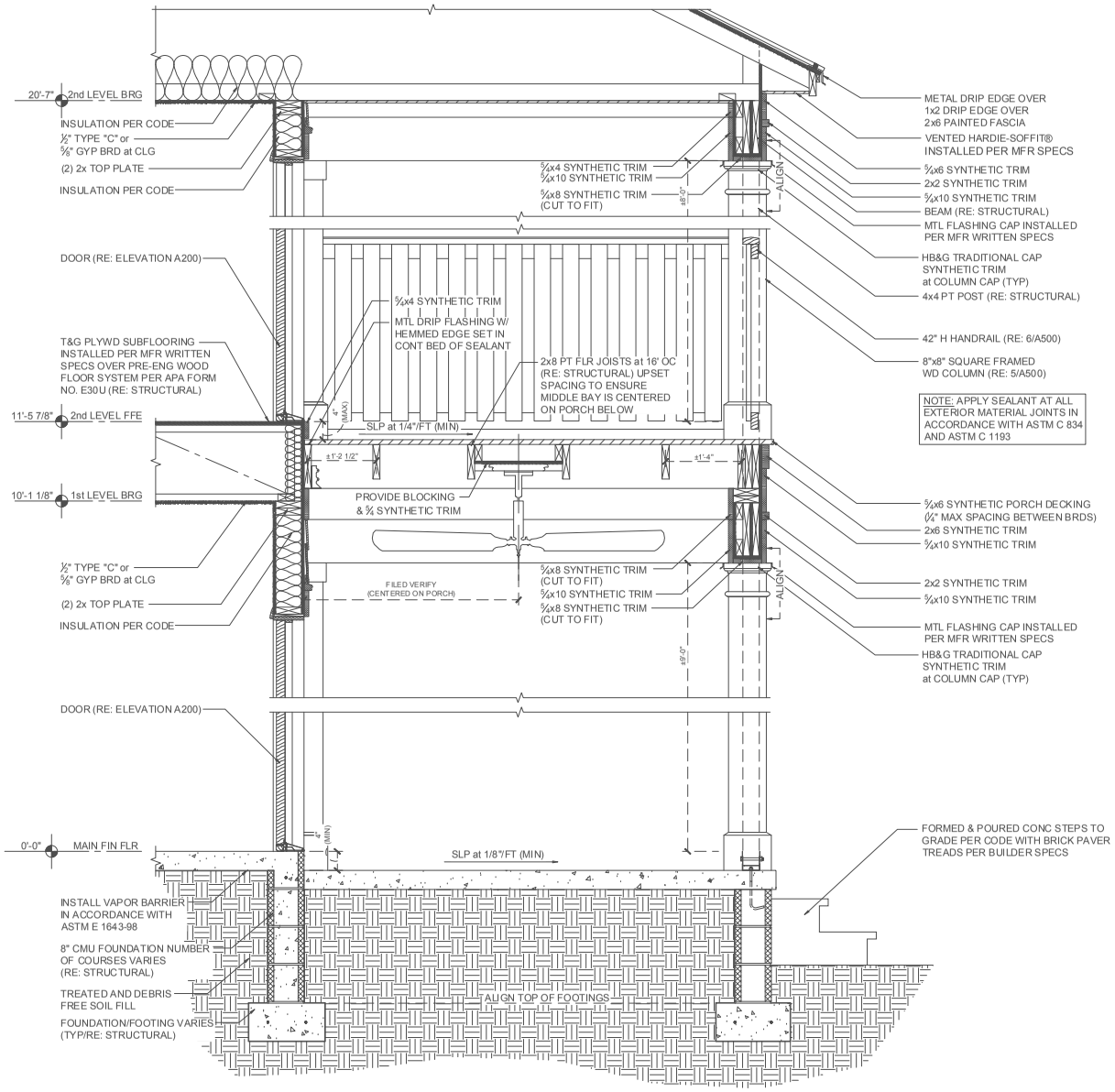

1 A402 ENTRY PORCH SECTION

SCALE: 1" = 1'-0"

©2016 TRUE DESIGN STUDIOS INC.

tds
true design studios
4745 SUTTON PARK CT., SUITE 402
JACKSONVILLE, FLORIDA 32224
P 904.821.5200 F 904.992.8700
WWW.TRUEDESIGNSTUDIOS.NET

DREAM FINDERS
THE MARK OF A QUALITY HOME

360 Corporate Way
Orange Park, FL 32073
www.dreamfindershomes.com

STADIUM - 19
2406 PLAN
ELEVATION B

DO NOT SCALE THESE DRAWINGS - DRAWING SCALE IS 50% OF DESIGNATED SCALE IF PRINTED ON 11"x17" MEDIA

1310 LIBERTY ST NORTH
JACKSONVILLE, FL

PROJECT NO:	2024.010319
DATE:	11-20-24
DRAWN:	JC
CHKD:	DWR

REVISIONS:
06-06-25 - PRC - JC

A402

NOT ISSUED FOR CONSTRUCTION 00-00-0000

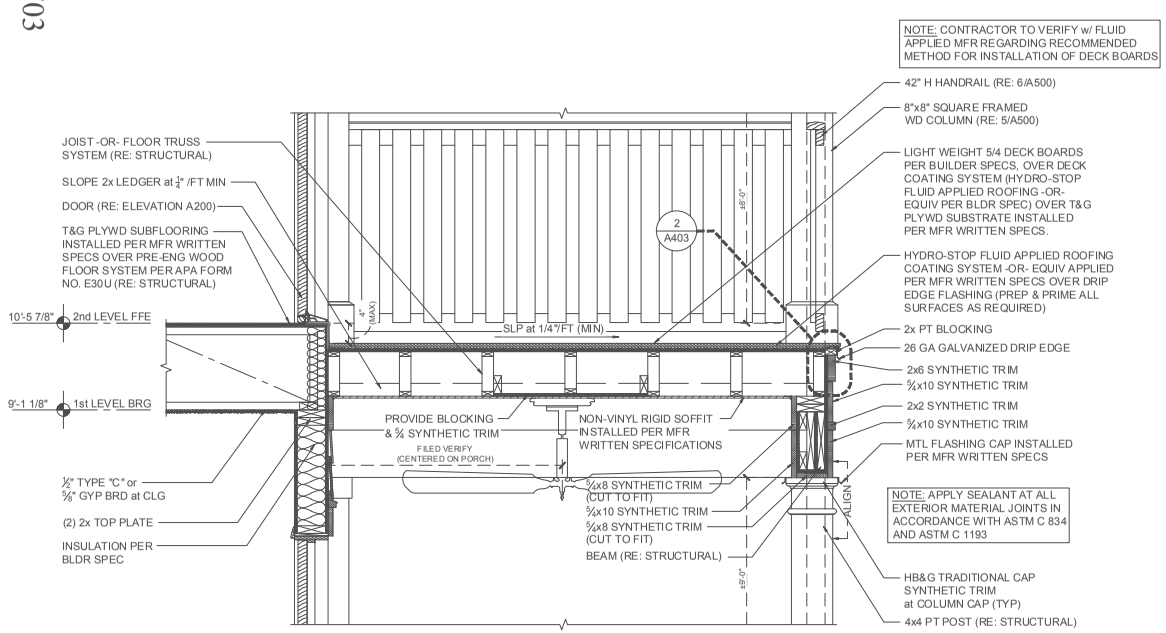

1 A403 PARTIAL ENTRY PORCH SECTION w/ OPT HYDRO-STOP

©2019 TRUE DESIGN STUDIOS INC.

SCALE: 1" = 1'-0"

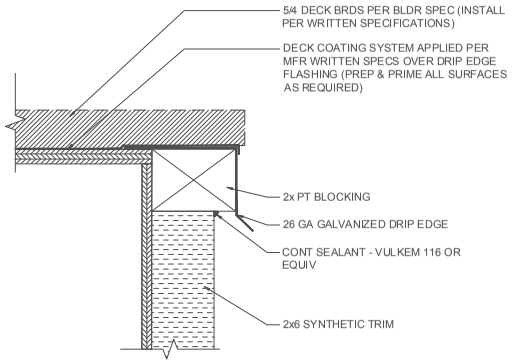

2 A403 BALCONY EDGE DETAIL

©2019 TRUE DESIGN STUDIOS INC.

SCALE: 6" = 1'-0"

tds
true design studios
4745 SUTTON PARK CT., SUITE 402
JACKSONVILLE, FLORIDA 32224
P 904.821.5200 F 904.992.8700
WWW.TRUEDESIGNSTUDIOS.NET

DREAM FINDERS HOMES
THE MARK OF A QUALITY HOME

360 Corporate Way
Orange Park, FL 32073
www.dreamfindershomes.com

STADIUM - 19
2406 PLAN
ELEVATION B

DO NOT SCALE THESE DRAWINGS - DRAWING SCALE IS 50% OF DESIGNATED SCALE IF PRINTED ON 11"x17" MEDIA

1310 LIBERTY ST NORTH
JACKSONVILLE, FL

PROJECT NO:	2024.010319
DATE:	11-20-24
DRAWN:	JC
CHKD:	DWR

REVISIONS:
06-06-25 - PRC - JC

A403

NOT ISSUED FOR CONSTRUCTION 00-00-0000

COA-24-31703

TYPICAL WINDOW FLASHING

METHOD "A-1" (ASTM E 2112-01)

WINDOW INSTALLATION (METHOD A-1)

WEATHER RESITIVE BARRIER (WRB) APPLIED PRIOR TO THE WINDOW INSTALLATION.
FLASHING APPLIED OVER THE FACE OF THE MOUNTING FLANGE.

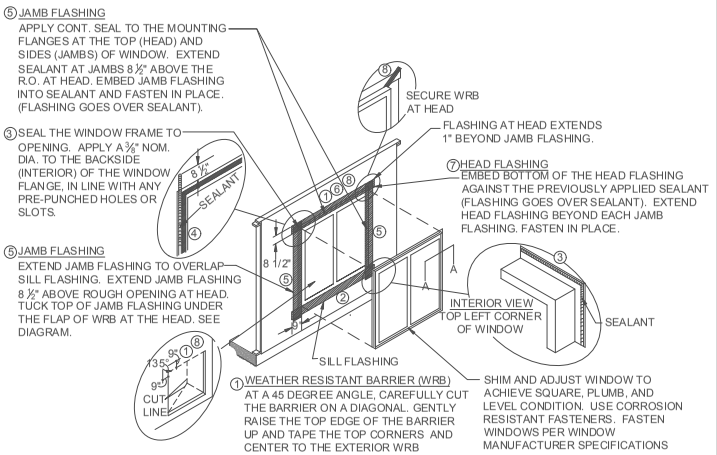

STEPS:

① IN WATER SHEDDING FASHION, STARTING AT THE BASE OF THE WALL & WORKING TOWARDS THE TOP, INSTALL THE WRB TO THE FACE OF THE SHEATHING.	④ APPLY BEAD OF SEALANT AT SIDE JAMBS. EXTEND 8 ½"
	⑤ APPLY JAMB FLASHING
	⑥ APPLY BEAD OF SEALANT AT HEAD
② APPLY SILL FLASHING	⑦ APPLY HEAD FLASHING
③ APPLY BEAD OF SEALANT AT BACK OF WINDOW FLANGE & SET WINDOW USING PAN HEAD SCREWS TO FACILITATE INSPECTION.	⑧ REMOVE PREVIOUSLY APPLIED TAPE, ALLOWING WRB TO LAY FLAT OVER HEAD FLASHING. APPLY NEW SHEATHING TAPE OVER DIAGONAL CUT - SEE DIAGRAM.

SECTION A

THROUGH WINDOW JAMB

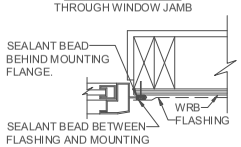

EXTERIOR DOOR FLASHING

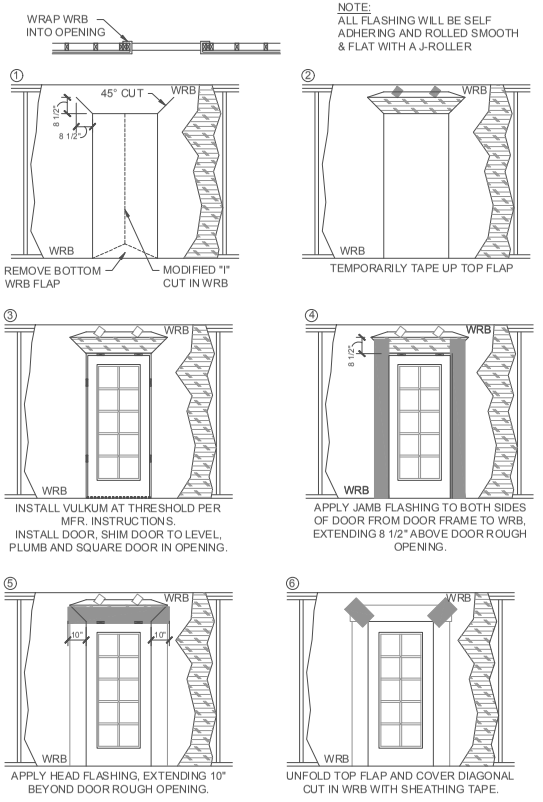

TYPICAL DOOR FLASHING

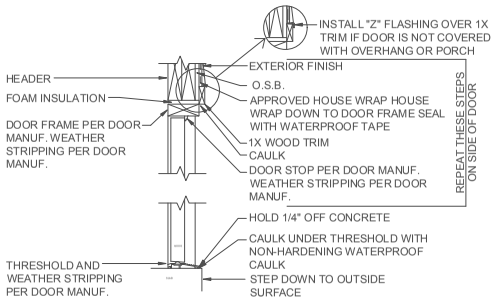

TYPCIAL ROOF FLASHING

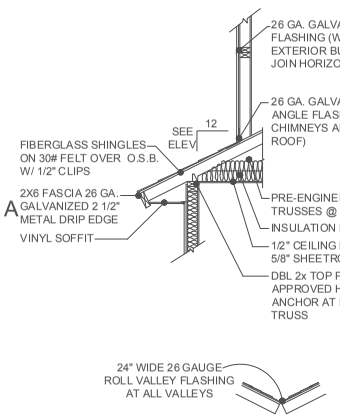

ROOF FLASHING

SCALE: N.T.S.

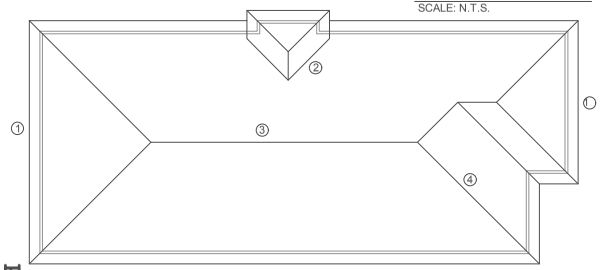

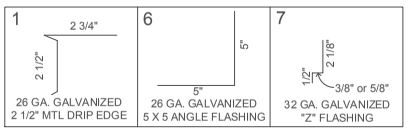

1. DRIP EDGE FLASHING:

DRIP EDGE SHALL BE PROVIDED AT EAVES AND GABLES OF SHINGLED ROOFS, AND OVERLAPPED A MINIMUM OF 2". EAVE DRIP EDGES SHALL EXTEND 1/4" BELOW SHEATHING AND EXTEND BACK ON THE ROOF A MINIMUM OF 2". DRIP EDGE SHALL BE MECHANICALLY FASTENED A MAXIMUM OF 12" O.C. DRIP EDGE AT EAVES SHALL BE PERMITTED TO BE INSTALLED EITHER OVER OR UNDER THE UNDERLAYMENT. IF INSTALLED OVER THE UNDERLAYMENT, THERE SHALL BE A MINIMUM 2" WIDTH OF ROOF CEMENT INSTALLED OVER THE DRIP EDGE FLANGE.

THE UNDERLAYMENT SHALL CONFORM WITH ASTM D 226, TYPE I OR TYPE II, OR ASTM D 4869, TYPE I OR TYPE II. THE UNDERLAYMENT SHALL BE INSTALLED IN WATER SHEDDING FASHION, STARTING WITH THE EAVE EDGE AND ROLLED HORIZONTAL. UNDERLAYMENT SHALL OVERLAP A MINIMUM OF 19" AND BE MECHANICALLY FASTENED AT 36" O.C. MAXIMUM.

2. VALLEY FLASHING:

VALLEY LININGS SHALL BE INSTALLED IN ACCORDANCE WITH MANUFACTURER'S INSTALLATION INSTRUCTIONS BEFORE APPLYING SHINGLES. VALLEY LININGS OF THE FOLLOWING TYPES SHALL BE PERMITTED:

1. FOR OPEN VALLEY (VALLEY LINING EXPOSED) LINED WITH METAL, THE VALLEY LINING SHALL BE AT LEAST 24" WIDE AND OF ANY OF THE CORROSION-RESISTANT METALS IN TABLE R903.1

2. FOR OPEN VALLEYS, VALLEY LINING OF TWO PLIES OF MINERAL SURFACE ROLL ROOFING, COMPLYING WITH ASTM D 249, SHALL BE PERMITTED. THE BOTTOM LAYER SHALL BE 18" AND THE TOP LAYER A MINIMUM OF 36" WIDE.

3. FOR CLOSED VALLEYS (VALLEY COVERED WITH SHINGLES), VALLEY LINING OF ONE PLY SMOOTH ROLL ROOFING COMPLYING WITH ASTM D 224 TYPE II OR TYPE III AND AT LEAST 36" WIDE OR VALLEY LINING AS DESCRIBED IN ITEMS 1 AND 2 ABOVE SHALL BE PERMITTED. SPECIALTY UNDERLAYMENT COMPLYING WITH ASTM D 1970 MAY BE USED IN LIEU OF THE LINING MATERIAL.

3. RIDGE FLASHING:

THE UNDERLAYMENT SHALL BE INSTALLED IN WATER SHEDDING FASHION. THE LAST LAYER APPLIED AT THE RIDGE SHALL BE FOLDED OVER THE RIDGE AND MECHANICALLY FASTENED, AT 36" O.C. MAXIMUM TO THE OPPOSING SIDE OF THE ROOF. REPEAT PROCEDURE FOR OPPOSING SIDE OF ROOF. WHEN COMPLETED THERE WILL BE TWO LAYERS OF UNDERLAYMENT OVERLAPPING THE RIDGE.

4. HIP FLASHING:

THE UNDERLAYMENT SHALL BE INSTALLED IN WATER SHEDDING FASHION. AT THE HIP LINE FOLD THE UNDERLAYMENT OVER THE HIP AND MECHANICALLY FASTEN, AT 36" O.C. MAXIMUM TO THE OPPOSING SIDE OF THE ROOF. REPEAT PROCEDURE FOR OPPOSING SIDE OF ROOF. WHEN COMPLETED THERE WILL BE TWO LAYERS OF UNDERLAYMENT OVERLAPPING THE HIP.

5. CRICKETS AND SADDLES FLASHING:

A CRICKET OR SADDLE SHALL BE INSTALLED ON THE RIDGE SIDE OF ANY CHIMNEY GREATER THAN 30" WIDE. CRICKET OR SADDLE COVERINGS SHALL BE SHEET METAL OR OF THE SAME MATERIAL AS THE ROOF COVERING. THE RIDGE AND VALLEY FLASHING OF CRICKETS OR SADDLES SHALL BE THE SAME AS THE RIDGE AND VALLEY FLASHING ON THE MAIN ROOF.

6. BASE AND COUNTER FLASHING:

BASE AND COUNTER FLASHING SHALL BE INSTALLED IN ACCORDANCE WITH MANUFACTURER'S INSTALLATION INSTRUCTIONS, OR A CONTINUOUS METAL "L" FLASHING SHALL BE SET IN APPROVED FLASHING CEMENT AND SET FLUSH TO BASE OF WALL AND OVER THE UNDERLAYMENT. BOTH HORIZONTAL AND VERTICAL METAL FLANGES SHALL BE FASTENED 6" ON CENTER WITH APPROVED FASTENERS. ALL LAPS SHALL BE A MINIMUM OF 4" FULLY SEALED IN APPROVED FLASHING CEMENT. FLASHING SHALL START AT THE LOWER PORTION OF ROOF TO ENSURE WATER-SHEADING CAPABILITIES OF ALL METAL LAPS. THE ENTIRE EDGE OF THE HORIZONTAL FLANGE SHALL BE SEALED COVERING ALL NAIL PENETRATIONS WITH APPROVED FLASHING CEMENT AND MEMBRANE. SHINGLES SHALL OVERLAP THE HORIZONTAL FLANGE AND SHALL BE SET IN APPROVED FLASHING CEMENT.

BASE FLASHING SHALL BE OF EITHER CORRISION-RESISTANT METAL PROVIDED IN SECTION R905.2.8.1 OR MINERAL SURFACE ROOL ROOFING WEIGHING A MINIMUM OF 77 POUNDS PER 100 SQUARE FEET. COUNTER FLASHING SHALL BE CORROSION-RESISTANT METAL WITH A MINIMUM THICKNESS PROVIDED IN TABLE 903.1.

7. FIBER CEMENT SIDING FLASHING:

PANEL SIDING:
PANELS SHALL BE INSTALLED WITH THE LONG DIMENSION PARALLEL TO FRAMING. VERTICAL JOINTS SHALL OCCUR OVER FRAMING MEMBERS AND SHALL BE SEALED WITH CAULKING OR COVERED WITH BATTENS. HORIZONTAL JOINTS SHALL BE FLASHED WITH "Z-FLASHING" AND BLOCKED WITH SOLID WOOD FRAMING.

HORIZONTAL LAP SIDING:
LAP SIDING SHALL BE LAPPED A MINIMUM OF 1 1/4" AND SHALL HAVE THE ENDS SEALED WITH CAULKING, COVERED WITH AN H-SECTION JOINT COVER, OR LOCATED OVER A STRIP OF FLASHING. LAP SIDING COURSES MAY BE INSTALLED WITH THE FASTENER HEADS EXPOSED OR CONCEALED, ACCORDING TO APPROVED MANUFACTURER'S INSTALLATION INSTRUCTIONS.

tds
true design studios
4745 SUTTON PARK CT., SUITE 402
JACKSONVILLE, FLORIDA 32224
P 904.821.9200 F 904.992.8700
WWW.TRUEDESIGNSTUDIOS.NET

DREAM FINDERS HOMES
THE MARK OF A QUALITY HOME

360 Corporate Way
Orange Park, FL 32073
www.dreamfindershomes.com

DO NOT SCALE THESE DRAWINGS - DRAWING SCALE IS 50% OF DESIGNATED SCALE IF PRINTED ON 11"x17" MEDIA

STADIUM - 19
2406 PLAN
ELEVATION B

1310 LIBERTY ST NORTH
JACKSONVILLE, FL

PROJECT NO:	2024.010319
DATE:	11-20-24
DRAWN:	JC
CHKD:	DWR

REVISIONS:
06-06-25 - PRC - JC

A500

NOT ISSUED FOR CONSTRUCTION 00-00-0000

524
Exhibit B
Page 14 of 16

COA-24-31703

ELECTRICAL LEGEND			
$	SWITCH	TV	TV OUTLET
$3	THREE-WAY SWITCH	SPK	SPEAKER
$4	FOUR-WAY SWITCH	T	THERMOSTAT
$R	RHEOSTAT	SD	SMOKE DETECTOR
	DUPLEX	CMD	CARBON MONOXIDE DETECTOR
AFCI	AFCI DUPLEX		CEILING LIGHT
GFCI	GFCI DUPLEX		RECESSED CEILING LIGHT
CTR	COUNTERTOP DUPLEX		RECESSED EYEBALL LIGHT
	SWITCHED DUPLEX		WALL HUNG LIGHT
220	220 VOLT OUTLET		EYEBALL LIGHT
	QUADRUPLEX		LANDSCAPING LIGHT
CEILING	CEILING DUPLEX		FLOODLIGHT
FLOOR	FLOOR DUPLEX		VENT
	JUNCTION		VENT AND LIGHT
	DOOR BELL		HEAT AND LIGHT
	GARAGE DOOR		HEAT AND VENT
PH	PHONE OUTLET		HEAT, VENT AND LIGHT

NOTE :
1. ALL PERMANENTLY INSTALLED INTERIOR AND EXTERIOR LIGHTING FIXTURES SHALL CONTAIN ONLY HIGH EFFICACY LAMPS AS PER FBC R404.1
2. ALL BRANCH CIRCUITS THAT SUPPLY 120V, SINGLE PHASE, 15 AND 20 AMP OUTLETS INSTALLED IN FAMILY ROOMS, DINING ROOMS, LIVING ROOMS, PARLORS, LIBRARIES, DENS, BEDROOMS, SUNROOMS, RECREATIONS ROOMS, CLOSETS, HALLWAY AND SIMILAR ROOMS OR AREAS SHALL BE PROTECTED BY A COMBINATION TYPE ARC-FAULT CIRCUIT INTERRUPTER INSTALLED TO PROVIDE PROTECTION OF THE BRANCH CIRCUIT AS PER FBC 3902.16 .

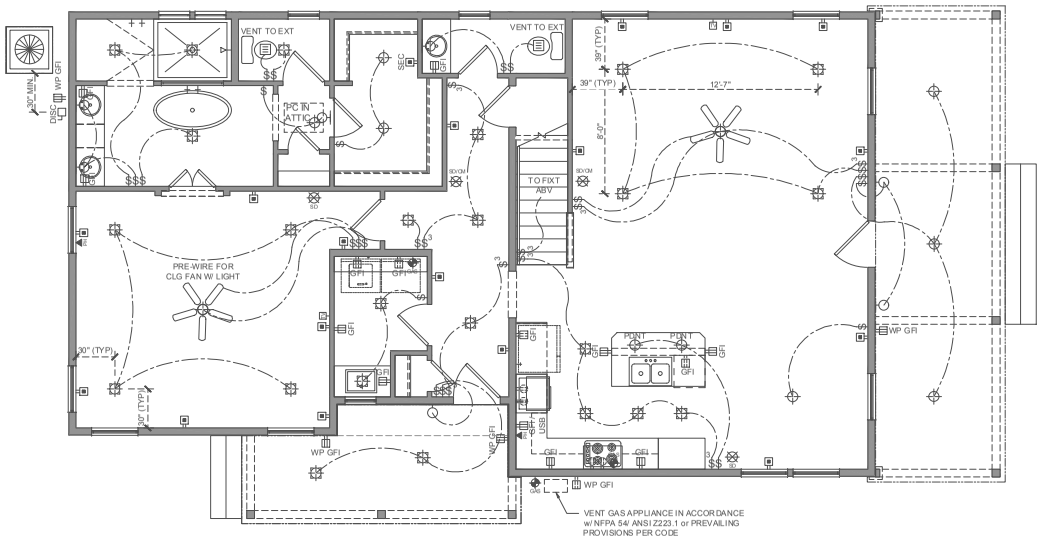

1st LEVEL ELECTRICAL PLAN

SCALE: ¼" = 1'-0"

tds
true design studios
4745 SUTTON PARK CT., SUITE 402
JACKSONVILLE, FLORIDA 32224
P 904.821.5200 F 904.992.8700
WWW.TRUEDESIGNSTUDIOS.NET

DREAM FINDERS
THE MARK OF A QUALITY HOME

360 Corporate Way
Orange Park, FL 32073
www.dreamfindershomes.com

STADIUM - 19
2406 PLAN
ELEVATION B

DO NOT SCALE THESE DRAWINGS - DRAWING SCALE IS 50% OF DESIGNATED SCALE IF PRINTED ON 11"x17" MEDIA

1310 LIBERTY ST NORTH
JACKSONVILLE, FL

PROJECT NO:	2024.010319
DATE:	11-20-24
DRAWN:	JC
CHKD:	DWR

REVISIONS:
06-06-25 - PRC - JC

E100

NOT ISSUED FOR CONSTRUCTION 00-00-0000

COA-24-31703

ELECTRICAL LEGEND			
$	SWITCH		TV OUTLET
$3	THREE-WAY SWITCH		SPEAKER
$4	FOUR-WAY SWITCH	T	THERMOSTAT
$R	RHEOSTAT	SD	SMOKE DETECTOR
	DUPLEX	CM	CARBON MONOXIDE DETECTOR
	AFCI DUPLEX		CEILING LIGHT
	GFCI DUPLEX		RECESSED CEILING LIGHT
GFCI	COUNTERTOP DUPLEX		RECESSED EYEBALL LIGHT
	SWITCHED DUPLEX		WALL HUNG LIGHT
220	220 VOLT OUTLET		EYEBALL LIGHT
	QUADRUPLEX		LANDSCAPING LIGHT
CEILING	CEILING DUPLEX		FLOODLIGHT
FLOOR	FLOOR DUPLEX		VENT
	JUNCTION		VENT AND LIGHT
	DOOR BELL		HEAT AND LIGHT
	GARAGE DOOR		HEAT AND VENT
PH	PHONE OUTLET		HEAT, VENT AND LIGHT

NOTE :
1. ALL PERMANENTLY INSTALLED INTERIOR AND EXTERIOR LIGHTING FIXTURES SHALL CONTAIN ONLY HIGH EFFICACY LAMPS AS PER FBC R404.1
2. ALL BRANCH CIRCUITS THAT SUPPLY 120V, SINGLE PHASE, 15 AND 20 AMP OUTLETS INSTALLED IN FAMILY ROOMS, DINING ROOMS, LIVING ROOMS, PARLORS, LIBRARIES, DENS, BEDROOMS, SUNROOMS, RECREATIONS ROOMS, CLOSETS, HALLWAY AND SIMILAR ROOMS OR AREAS SHALL BE PROTECTED BY A COMBINATION TYPE ARC-FAULT CIRCUIT INTERRUPTER INSTALLED TO PROVIDE PROTECTION OF THE BRANCH CIRCUIT AS PER FBC 3902.16 .

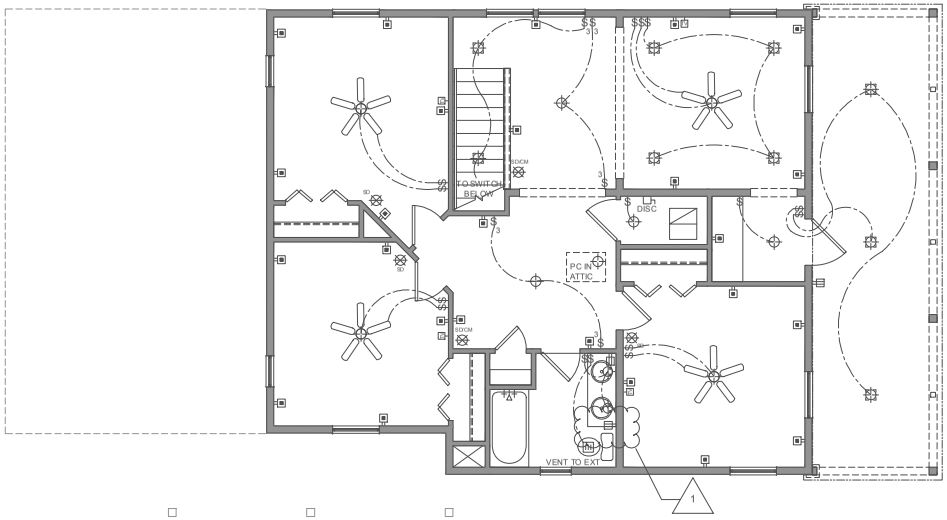

2nd LEVEL ELECTRICAL PLAN

SCALE: ¼" = 1'-0"

tds
true design studios
4745 SUTTON PARK CT., SUITE 402
JACKSONVILLE, FLORIDA 32224
P 904.821.5200 F 904.992.8700
WWW.TRUEDESIGNSTUDIOS.NET

DREAM FINDERS
THE MARK OF A QUALITY HOME
360 Corporate Way
Orange Park, FL 32073
www.dreamfindershomes.com

STADIUM - 19
2406 PLAN
ELEVATION B

DO NOT SCALE THESE DRAWINGS - DRAWING SCALE IS 50% OF DESIGNATED SCALE IF PRINTED ON 11"x17" MEDIA

1310 LIBERTY ST NORTH
JACKSONVILLE, FL

PROJECT NO:	2024.010319
DATE:	11-20-24
DRAWN:	JC
CHKD:	DWR

REVISIONS:
06-06-25 - PRC - JC

E101

NOT ISSUED FOR CONSTRUCTION 00-00-0000

Proposed Fencing (will require a separate COA)

MAP SHOWING BOUNDARY, TOPOGRAPHIC & TREE SURVEY WITH PLOT PLAN OF

NORTH 43.50' OF THE SOUTH 109.00' OF THE EAST 105.00' OF LOT 3 BLOCK 14 AS SHOWN ON MAP OF EAST SPRINGFEILD

AS RECORDED IN PLAT BOOK 2 PAGES 4–5 OF THE CURRENT PUBLIC RECORDS OF DUVAL COUNTY, FLA.
CERTIFIED TO: DREAM FINDERS HOME, LLC

x = proposed location of fence

Please note that there is an existing fence along a portion of the rear of the property. Applicant is proposing to add fencing in the indicated area and will tie in to the existing fence. No trees will be affected by fence installation

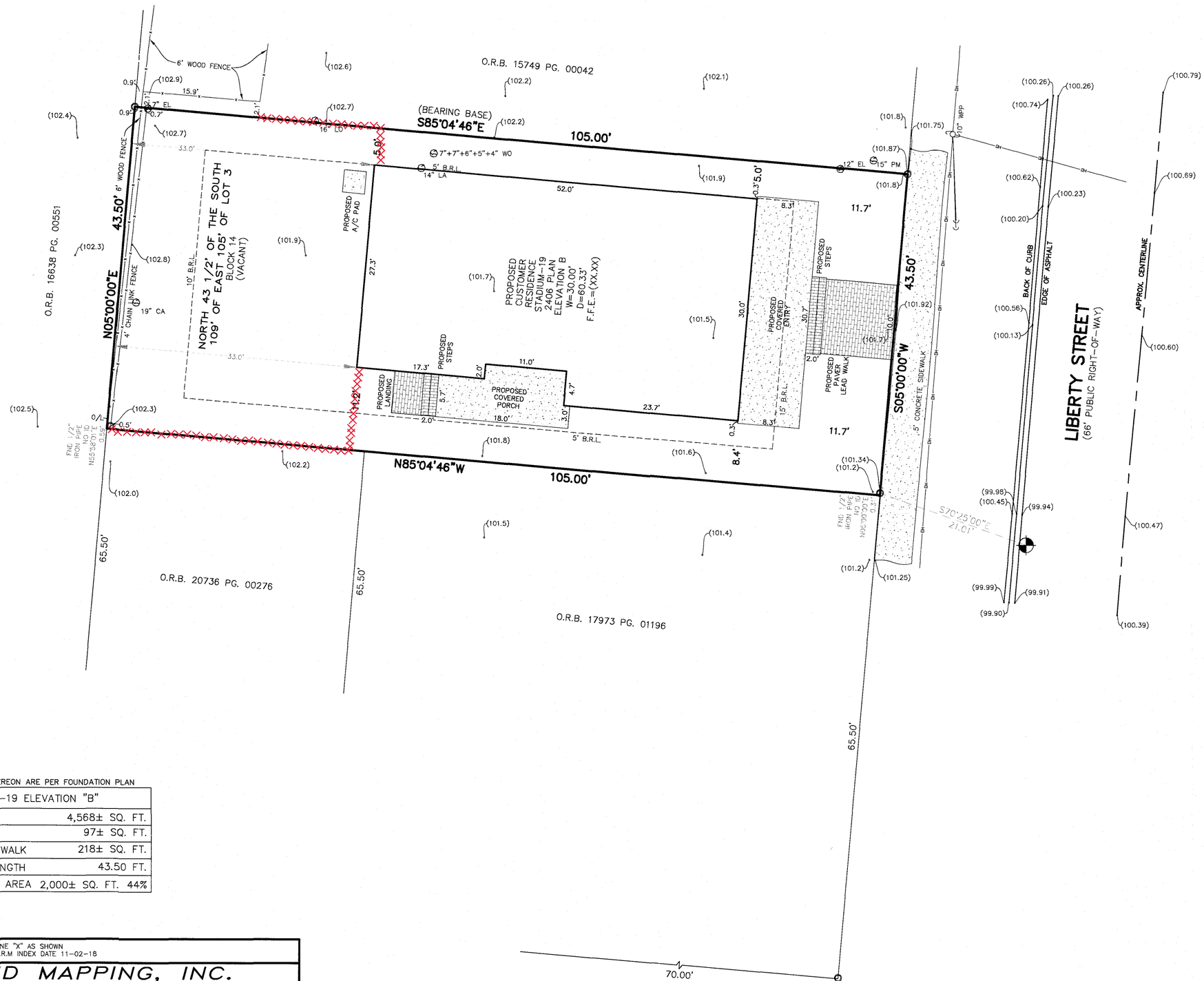

TREE LEGEND

10 CA		10" CAMPHOR
10 EL		10" ELM
10 LA		10" LAUREL OAK
10 LO		10" LIVE OAK
10 PM		10" PALM
10 WO		10" WATER OAK

LEGEND & ABBREVIATIONS

- DENOTES FOUND 1/2" IRON PIPE LB NO ID UNLESS OTHERWISE NOTED
- –DENOTES WOOD POWER POLE
- –DENOTES GUY ANCHOR
- –DENOTES OVERHEAD POWER LINES
- (00.00) –DENOTES TOPOGRAPHIC SPOT ELEVATION (HARD)
- (00.0) –DENOTES TOPOGRAPHIC SPOT ELEVATION (GROUND SHOT)

DIMENSIONS SHOWN HEREON ARE PER FOUNDATION PLAN

STADIUM–19 ELEVATION "B"	
LOT SIZE	4,568± SQ. FT.
LEADWALK	97± SQ. FT.
APPROXIMATE SIDEWALK	218± SQ. FT.
RIGHT–OF–WAY LENGTH	43.50 FT.
TOTAL IMPERVIOUS AREA	2,000± SQ. FT. 44%

UNDERGROUND ENCROACHMENTS NOT LOCATED

THE LAND SHOWN HEREON IS IN THE SPECIAL FLOOD HAZARD ZONE "X" AS SHOWN ON FLOOD INSURANCE RATE MAP 0359 J FOR DUVAL COUNTY, FLORIDA, F.I.R.M INDEX DATE 11–02–18

ALL AMERICAN SURVEYING AND MAPPING, INC.

SUBSIDIARY OF VANBUSKIRK & FISH SURVEYING AND MAPPING. INC..

LAND SURVEYORS – 3751 SAN JOSE PLACE, SUITE 15 – JACKSONVILLE, FLORIDA, 32257 – 904/279–0088 – LICENSED LAND BUSINESS NO. 8455

Legend

COV.	= COVERED	F.F.E.	= FINISH FLOOR ELEVATION
FND.	= FOUND	A/C	= AIR CONDITIONER
ESMT	= EASEMENT	I.D.	= IDENTIFICATION
CONC	= CONCRETE	P.R.M.	= PERMANENT REFERENCE MONUMENT
MON.	= MONUMENT	P.T.	= POINT OF TANGENCY
I.P.	= IRON PIPE	P.C.P.	= PERMANENT CONTROL POINT
I.R.	= IRON ROD	P.C.	= POINT OF CURVE
Δ	= DELTA ANGLE	P.R.C.	= POINT OF REVERSE CURVE
CH	= CHORD	P.C.C.	= POINT OF COMPOUND CURVE
A	= ARC LENGTH	B.R.L.	= BUILDING RESTRICTION
R	= RADIUS	F.P.L.	= FLORIDA POWER & LIGHT
(C)	= CALCULATED	(TYP.)	= TYPICAL
(D)	= DEED	NGVD	= NATIONAL GEODETIC VERTICAL DATUM
(P)	= PLAT	NAVD	= NORTH AMERICAN VERTICAL
(R)	= RADIAL LINE	N.T.S.	= NOT TO SCALE
℄	= CENTER LINE	LB	= LICENSED BUSINESS
R/W	= RIGHT–OF–WAY	P.I.	= POINT OF INTERSECTION
(A)	= ACTUAL	EOW	= EDGE OF WATER
(W)	= WITNESS	TOB	= TOP OF BANK

THIS IS TO CERTIFY THAT THE ABOVE LANDS WERE SURVEYED UNDER MY RESPONSIBLE SUPERVISION AND DIRECTION, THAT THERE ARE NO ENCROACHMENTS EXCEPT AS SHOWN AND THAT THE SURVEY SHOWN HEREON MEETS THE STANDARDS OF PRACTICE AS SET FORTH BY THE FLORIDA BOARD OF PROFESSIONAL SURVEYORS AND MAPPERS PURSUANT TO CHAPTER 472.027 / CHAPTER 5J17, FLORIDA ADMINISTRATIVE CODE

SURVEY NOT VALID UNLESS EMBOSSED BY SEAL
JAMES D. HARRISON, JR., No. 2647

SCALE 1"=10'

DATE 06–13–2006

5/14/25
FLORIDA REGISTERED SURVEYOR AND MAPPER

VB&F

ALL AMERICAN SURVEYING AND MAPPING, INC.

TREE–; W.O.#225565; 05–01–25 (FIELD)
TOPOGRAPHIC–PLOT PLAN–; W.O.#224790; 03–20–25 (FIELD)
BOUNDARY–; W.O.# 06–991; 06–13–2006 (FIELD)

THIS SURVEY WAS PERFORMED WITHOUT THE BENEFIT OF A TITLE COMMITMENT. THERE MAY BE ADDITIONAL EASEMENTS AND/OR RESTRICTIONS THAT ARE NOT SHOWN ON THIS SURVEY THAT MAY BE FOUND IN THE PUBLIC RECORDS OF THIS COUNTY.

BEARINGS AND DIRECTIONAL NORTH ARE BASED ON AN ASSUMED DATUM

BENCHMARK:
SET NAIL & DISK LB 3857 IN CURB

ELEVATION: (100.00)

ELEVATIONS SHOWN HEREON REFER TO AN ASSUMED DATUM

F.B. N/A D.C. 2006–991–225565 DR. BY TH CHEK'D BY AJB DIR. P:\2006\DREAM FINDERS HOMES\1310 LIBERTY STREET ORDER NO. 225565–TREE 526 FILE 2206–991

Example of the type of fence to be installed

Photos of houses within Springfield submitted by applicant with non-recessed windows

307 N Liberty St

1135 N Liberty st

1136 N Liberty St

1137 N Liberty St

K. Public Comments

Jacksonville
Historic Preservation
Commission

L. New Business

Jacksonville
Historic Preservation
Commission

M. Information

Jacksonville
Historic Preservation
Commission

2026 JHPC Dates and Deadlines

A NEW DAY.

City of Jacksonville Historic Preservation Commission

2026 Schedule

All applications must be deemed complete and sufficient by Staff prior to this date to be invoiced for payment.	Payment Deadline	Commission Meeting Date
Monday, December 29, 2025*	***Monday, January 5, 2026****	Wednesday, January 28, 2026
Thursday, January 22, 2026	Friday, January 30, 2026	Wednesday, February 25, 2026
Thursday, February 19, 2026	Friday, February 27, 2026	Wednesday, March 25, 2026
Thursday, March 19, 2026	Friday, March 27, 2026	Wednesday, April 22, 2026
Thursday, April 23, 2026	Friday, May 1, 2026	Wednesday, May 27, 2026
Thursday, May 21, 2026	Friday, May 29, 2026	Wednesday, June 24, 2026
Thursday, June 18, 2026	Friday, June 26, 2026	Wednesday, July 22, 2026
Thursday, July 23, 2026	Friday, July 31, 2026	Wednesday, August 26, 2026
Thursday, August 20, 2026	Friday, August 28, 2026	Wednesday, September 23, 2026
Thursday, September 24, 2026	Friday, October 2, 2026	Wednesday, October 28, 2026
Thursday, October 15, 2026	Friday, October 23, 2026	Wednesday, November 18, 2026
Friday, November 13, 2026	Friday, November 20, 2026	Wednesday, December 16, 2026

* *Amended to accommodate New Year's*
** *Amended to accommodate Veterans Day*

Meetings are held at 1:00 p.m. in the
Ed Ball Building, Room 1002 (1st Floor)
214 North Hogan Street
Jacksonville, Florida 32202

(*Meeting times and locations are subject to change*)

2026 COA Matrix (DRAFT)

2025~~5~~6 COA MATRIX CRITERIA

All approvals are subject to conditions to ensure consistency with the Design Guidelines and the Secretary of the Interior's Standards for Rehabilitation

Scope of Work		Administrative Review (Must meet all of the applicable criteria)	Jacksonville Historic Preservation Commission (Must meet any of the applicable criteria)
Alterations			
1.	**Accessibility Ramps**	• **Location:** does not permanently damage historic fabric • **Material:** wood, composite, or metal on single-family residential structures • **Size:** FFE up to 3 feet tall	• Any ramp on multi-family residential or non-residential structures • **Material:** concrete, CMU, or masonry • **Design:** questionable or incompatible • **Size:** FFE taller than 3 feet

2.	**Awnings and Canopies**	• **Material:** new cloth/canvas, or matches an existing historic material.
		• **Design:** consistent with the shape of the window/door
		• **Location:** does not block or damage significant historic fabric
		• **Size:**
		  ○ Readily street-visible and extends less than 6 feet from the wall
		  ○ Not readily street-visible and can extend more than 6 feet from the wall
			• **Material:** new metal awning or canopy
			• **Design:** incompatible size for the window/door opening
			• **Location:** blocks or damages significant historic fabric
			• **Size:**
			  ○ Readily street visible and extends more than 6 feet from the wall

3.	**Decks and Balconies**	• **Location:** rear, side, or secondary elevation; not readily visible • **Material:** wood or composite • **Size:** FFE up to 4 feet above grade for decks	• **Location:** front or street-facing elevations • **Size:** FFE higher than 4 feet above grade for decks

4.	**Doors**	**Pedestrian Doors**
		• Contributing structure door replacement:
		  ○ Irreparable street-visible doors that match the historic design and material
		  ○ Replacement of an incompatible non-historic/missing door with a compatible design
		  ○ Not readily street-visible door that is a compatible design
		• Non-contributing structure door replacement with a matching or compatible design
		
		Garage Doors
		• **Design:** compatible with the architectural style
		• **Size:** matches existing door or restores an enclosed door opening
			Pedestrian Doors
			• Contributing structure door replacement:
			  ○ Street visible door replacement when the historic door is deemed reparable
			• Incompatible design on a readily street-visible door
			• Interior muntins
			
			Garage Doors
			• **Design:** incompatible with architectural style
			• **Size:** increasing the number of garage bays
			
			Security Bars
			• **Design:** non-traditional or incompatible design

2025~~5~~6 COA MATRIX CRITERIA

All approvals are subject to conditions to ensure consistency with the Design Guidelines and the Secretary of the Interior's Standards for Rehabilitation

Scope of Work		Administrative Review (Must meet all of the applicable criteria)	Jacksonville Historic Preservation Commission (Must meet any of the applicable criteria)
	Doors (Cont.)	**Security Bars** • **Design:** wrought iron or compatible with the architectural style • **Location:** Not readily street-visible	• **Location:** street visible
5.	**Foundations**	• Foundation screening with brick lattice or framed wood / vinyl installed between piers • Repairing or restoring missing foundation infill and screening	• Any solid foundation infill or incompatible design • Elevating the building on a new foundation
6.	**Painting**	**General** • Previously painted materials • Consistent with NPS Preservation Brief #1 **Murals** • **Location**: secondary elevations • **Design**: does not obscure or block architecturally significant features • **Material**: wood, cementitious, or previously painted masonry	**General** • Unpainted masonry • Chemical treatments of masonry • Inconsistent with NPS Preservation Brief #1 **Murals** • **Location**: primary elevations • **Design**: obscures or blocks architecturally significant features • **Material**: unpainted masonry
7.	**Porches**	**General** • Matches existing, documented historic design, or architectural style **Ceiling and Floor Replacement** • **Materials**: matches existing or historically documented (wood can be replaced with composite) • **Design**: matches existing or historically documented design **Railing System** • **Materials**: Compatible material (wood, cementitious, or metal) • **Design**: simple, vertical design or matches architectural style	**General** • Changes in column design when it does not match the existing, documented historic design, or architectural style • When replacement or design is questionable **Railing System** • **Materials**: Incompatible material • **Design**: undocumented highly decorative or horizontal design

20256 COA MATRIX CRITERIA

All approvals are subject to conditions to ensure consistency with the Design Guidelines and the Secretary of the Interior's Standards for Rehabilitation

Scope of Work		Administrative Review (Must meet all of the applicable criteria)	Jacksonville Historic Preservation Commission (Must meet any of the applicable criteria)
8.	**Repointing Masonry**	• **Material**: matches existing mortar and color • Consistent with NPS Preservation Brief #2	• **Material**: does not match existing mortar and color • **Design**: mortar washes (Ggerman shmear or slurry wash) • Inconsistent with NPS Preservation Brief #2
9.	**Roofs**	**General** • Matching existing or documented historic roof in design; and color (if found to be character-defining) • Existing metal roofs may be metal shingle, shingle imitation panel, 5V crimp, or standing seam ○ Springfield: installing new metal roofs on Frame Vernaculars or replacing metal roofs with gray composition shingles • Roof material changes when required by Florida Building Code • Chimney removal that is not readily street-visible or not architecturally significant • Chimney alterations that do not negatively affect the architectural character of the chimney or structure **Solar Panel Installation** • **Location:** on asphalt/composition shingles or flat roofing • **Design:** panels and equipment shall be minimally visible • **Size:** panel height shall be 6 inches or less **Skylights** • **Location:** not readily street-visible • **Design:** do not negatively impact the structure • **Size:** less than 6 inches above the roof plane	**General** • Design that does not match the existing or documented historic roof • If proposed roofing is questionable for the architectural style of the structure and not required by the Florida Building Code • Chimney removal that is readily street-visible or architecturally significant • Chimney alterations that negatively affect the architectural character of the chimney or structure **Solar Panel Installation** • **Location:** on clay tile, slate, metal, asbestos or wood roofing • **Design:** questionable design or placement **Skylights** • **Location:** readily street-visible • **Design:** negatively impacts the structure • **Size:** more than 6 inches above the roof plane.
10.	**Siding**	**General** • Cementitious siding or water–resistant PVC trim for boards near or touching ground. • Replicating the design of the corner trim • Removal of non-historic siding	• Scattered siding replacement with a non-matching material or design • Wholesale replacement of reparable historic siding • Wholesale replacement of siding with an incompatible design or material

2025~~5~~6 COA MATRIX CRITERIA

All approvals are subject to conditions to ensure consistency with the Design Guidelines and the Secretary of the Interior's Standards for Rehabilitation

Scope of Work		Administrative Review (Must meet all of the applicable criteria)	Jacksonville Historic Preservation Commission (Must meet any of the applicable criteria)
	Siding (Cont.)	**Partial Siding Replacement** • When deemed beyond reasonable repair, scattered siding replacement when it matches the existing design and material • Siding replacement of an entire elevation when deemed beyond reasonable repair and it matches the remaining siding design in a cementitious or wood material **Wholesale Siding Replacement** • When deemed beyond reasonable repair, historic siding replacement with a cementitious or wood material that matches the historic design (profile, reveal, and exposure) ○ When the historic design is unknown, the new siding shall be compatible with the architectural style	• Any siding installation that covers historic siding
11.	**Signage**	~~• Temporary signage up to 30 days~~ ~~• Push-through opaque letters for halo lighting effect with an opaque cabinet~~ ~~• Non-illuminated, externally illuminated, or painted signs~~ • Any signage that does not block, damage or detract from significant historic fabric/architectural details • Consistent with Zoning Code	~~• Internally illuminated signs: A sign illuminated through transparent or translucent material from a source within the sign *** Sign Waiver required prior to JHPC review****~~ ~~• Roof or mobile signs~~ • Any signage that would block, damage, or detract from significant historic fabric/architectural details • ~~Signage~~ iInconsistent with Zoning Code
12.	**Windows**	**General** • Window repairs that match material and design • Window replacement on non-historic additions/enclosed porches • Window replacement of missing, metal, or non-original windows with a compatible design, placement, and arrangement • Manufacturer-installed or exterior-raised muntins **Window Alterations** • Restoring missing historic features • Window alterations that are reasonably compatible with the structure	**General** • Interior muntins or post-manufactured muntins • Sun Screens • Solar Window Screens **Window Alterations** • Readily street-visible window alterations that are incompatible with the structure

2025~~5~~6 COA MATRIX CRITERIA

All approvals are subject to conditions to ensure consistency with the Design Guidelines and the Secretary of the Interior's Standards for Rehabilitation

Scope of Work	Administrative Review (Must meet all of the applicable criteria)	Jacksonville Historic Preservation Commission (Must meet any of the applicable criteria)

Windows (Cont.)	**Window Replacement**
	• **Contributing Structures**
	  ○ When deemed irreparable, historic window replacement with a wood, wood blend, wood clad, or like-for-like material and matching design, placement, and arrangement
	  ○ Relocation of historic windows to street-visible locations when the windows being replaced are deemed irreparable
	• **Non-Contributing Structures**
	  ○ Window replacement with a compatible design, placement, and arrangement
	
	Security Bars
	• **Design**: wrought-iron or compatible with the architectural style
	• **Location**: Not readily street-visible
	
	Windows Screens
	• **Material:** wood, metal, or like-for-like
	• **Size:** matches size of window opening
	
	Window Shutters
	• **Design**: louvered, raised panel, or solid board
	• **Material**: wood or composite
	
	Exterior Storm Windows
	• **Size**: matches size of window opening
	• **Design**: matches design of window
		Window Replacement
		• **Contributing Structures**
		  ○ Replacement of reparable historic windows
		  ○ Replacement of historic windows with an incompatible window material, design, placement, or arrangement
		  ○ Replacement of historic windows with a vinyl material
		• **Non-Contributing Structures**
		  ○ Window replacement with an incompatible window design, placement, or arrangement
		
		Security Bars
		• **Design:** nontraditional or incompatible design
		• **Location:** readily street-visible
		
		Windows Screens
		• **Material:** non-traditional or alternative
		• **Size**: does not match size of window opening
		
		Window Shutters
		• **Design**: incompatible or alternative
		• **Material**: non-traditional or alternative
		
		Exterior Storm Windows
		• **Size**: does not match size of window opening
		• **Design**: non-traditional or alternative

2025~~5~~6 COA MATRIX CRITERIA

All approvals are subject to conditions to ensure consistency with the Design Guidelines and the Secretary of the Interior's Standards for Rehabilitation

Scope of Work		Administrative Review (Must meet all of the applicable criteria)	Jacksonville Historic Preservation Commission (Must meet any of the applicable criteria)
Demolition			
13.	**Partial Demolitions**	• Any addition that has not gained historic significance **Contributing structures** • **Location**: not readily street-visible • **Size**: less than 25% of the building footprint • **Design**: demolition with a compatible alteration **Non-contributing structures** • **Design**: demolition with a compatible alteration	**Contributing structures** • **Location**: readily street-visible • **Size**: greater than 25% of the building footprint • **Design**: demolition with a compatible alteration **Non-contributing structures** • **Design**: demolition with an incompatible alteration
14.	**Primary Structures**	**Non-contributing structures** • No COA required for complete demolition	• Contributing structures • Unlisted structures built within the period of significance
15.	**Accessory Structures**	**Non-contributing structures** • No COA required for complete demolition	• Contributing structures
16.	**MCCD Emergency Demolitions**	• Emergency declared by Municipal Code Compliance Division (MCCD) – Notice to JHPC required by next meeting	
New Construction			
17.	**Additions**	• **Location**: not readily street-visible • **Design**: compatible with primary structure • **Size**: one-story and under 25% of building footprint	• **Location**: readily street-visible • **Design**: incompatible with primary structure • **Size**: two-story or over 25% of building foot print
18.	**Primary Structures**		• All primary construction
19.	**Accessory Structures**	• **Location**: traditional location • **Design**: compatible with primary structure • **Size**: one-story and less than 576 square feet	• **Location**: non-traditional location • **Design**: incompatible with primary structure • **Size**: two-story or greater than 576 square feet
20.	**Sheds**	• **Location**: traditional location or not readily street-visible • **Design**:	• **Location**: non-traditional location or readily street-visible • **Design**: incompatible with primary structure

20256 COA MATRIX CRITERIA

All approvals are subject to conditions to ensure consistency with the Design Guidelines and the Secretary of the Interior's Standards for Rehabilitation

Scope of Work	Administrative Review (Must meet all of the applicable criteria)	Jacksonville Historic Preservation Commission (Must meet any of the applicable criteria)
Sheds (Cont.)	○ Sheds under 144 square feet can be any pre-fab design ○ Sheds between 144-576 square feet with a compatible design to primary structure or horizontal siding with a gabled roof • **Size**: one-story and under 576 square feet	• **Size**: two-story or greater than 576 square feet
Relocation		
21. Primary Structures	• Non-contributing structures relocated outside the district	• Relocating contributing structures • Non-contributing structures relocated within the district
22. Accessory Structures	• Non-contributing structures	• Contributing structures
Site Work		
23. Fences	• Consistent with the Fencing and Wall Guidelines • 8-foot fencing between incompatible uses	• Inconsistent with the Fencing and Wall Guidelines • Street visible alternative fencing materials • Highly decorative fencing/gate designs
24. Hardscaping	**General** • Hardscaping cannot exceed more than 25% of square-footage of the front yard (including the driveway) **Primary Walkways** • **Material**: concrete, rectangular brick, hexagonal pavers, or gravel • **Size**: no wider than the front steps • **Design**: street-visible pavers shall be red, brown, or gray **Secondary Walkways** • **Material**: concrete, rectangular brick, hexagonal pavers, or gravel • **Size**: no wider than 3 feet • **Design**: readily street-visible pavers shall be red, brown, or gray	**General** • Hardscaping that exceeds more than 25% of square-footage of the front yard (including the driveway) **Primary Walkways** • **Material**: non-traditional • **Size**: wider than the front steps • **Design**: readily street-visible white blends or alternative colors **Secondary Walkways** • **Material**: non-traditional • **Size**: wider than 3 feet • **Design**: readily street-visible alternative colors

20256 COA MATRIX CRITERIA

All approvals are subject to conditions to ensure consistency with the Design Guidelines and the Secretary of the Interior's Standards for Rehabilitation

Scope of Work		Administrative Review (Must meet all of the applicable criteria)	Jacksonville Historic Preservation Commission (Must meet any of the applicable criteria)

	Hardscaping (Cont.)	**Existing Driveways**
		• Replacing like-for-like in material and dimensions, **or in a smaller footprint**
		• Replacing poured concrete with concrete ribbons, brick pavers, or gravel in same dimensions
		  ○ Driveway apron can be poured concrete
		
		New Driveways
		• **Material**: concrete ribbons, rectangular brick pavers, or gravel
		  ○ Driveway apron can be poured concrete
		• **Size:**
		  ○ No wider than 10 feet with a flare of 12 feet at the street
		  ○ Where the garage is within 10 feet of the property line, the driveway is limited to the width of the garage or 24 feet wide, whichever is less
		• **Design**: readily street-visible pavers shall be red, brown, or gray
		
		Existing Parking Lots
		• **Material**: gravel, poured concrete, brick pavers, or asphalt
		• **Location**: not readily street-visible
		
		Patios
		• **Location**: not readily street-visible
			Existing Driveways
			• Driveway expansion
			• Non-traditional material
			
			New Driveways
			• **Material**: Non-traditional materials
			• **Size**: Expanding footprint beyond 10 feet wide or a flare larger than 12 feet
			• **Design**: New solid concrete driveways in the front or secondary front yards
			
			Street-Visible Parking Pads
			
			New Parking lots
			• **Material**: non-traditional or alternative
			• **Location**: readily street-visible
			
			Patios
			• **Location**: readily street-visible

25.	**Landscaping and Yard Features**	• No COA required for planting, lawn care or landscaping • **Location**: Not readily visible and does not block or damage significant historic fabric • **Size**: less than 6 feet or subordinate in scale to primary structure or yard	• **Location**: street visible or blocks/damages significant historic fabric • **Size**: greater than 6 feet tall or is out of scale with primary structure or yard
26.	**Equipment Installation and Utilities**	• **Location**: not readily street-visible and does not block or damage significant historic fabric • Small cell canisters	• **Location**: readily street-visible or blocks/damages significant historic fabric • New cell towers

20256 COA MATRIX CRITERIA

All approvals are subject to conditions to ensure consistency with the Design Guidelines and the Secretary of the Interior's Standards for Rehabilitation

Scope of Work	Administrative Review (Must meet all of the applicable criteria)	Jacksonville Historic Preservation Commission (Must meet any of the applicable criteria)

27. Pools	• **Location**: not readily street-visible
	• **Design**: in-ground, above ground, and pool enclosures
	• **Size**:
	  ○ No limitation for in-ground or above-ground pools
	  ○ Pool enclosures that are 1-story and shorter than primary structure
		• **Location**: readily street-visible pools and pool enclosures
		• **Design**: questionable roof material or form (pool enclosures only)
		• **Size**: pool enclosures that are 2-story or taller than primary structure

28. Recreational Structures	• **Location**: located within the side, rear, or secondary front yard and does not block or damage significant historic fabric • **Size**: structures less than 100 square feet	• **Location**: located within the front yard, or blocks/damages significant historic fabric • **Size**: structures greater than 100 square feet
29. Temporary Structures	• **Time**: Subject to Staff discretion • **Location**: located within the side, rear, or secondary front yard and does not block or damage significant historic fabric • **Size**: less than 15 feet tall and 800 square feet in area	• **Time**: Subject to Staff Discretion • **Location**: located within the front yard or blocks/damages significant historic fabric • **Size**: greater than 15 feet tall or 800 square feet in area
30. Decorative Walls	• Consistent with the Fencing and Wall Guidelines	• Inconsistent with Fencing and Wall Guidelines

Demolition Delay Report

A NEW DAY.

City of Jacksonville, Florida

Donna Deegan, Mayor

Planning Department
214 North Hogan Street
Jacksonville, FL 32202
(904) 255-7800
www.jacksonville.gov

M E M O R A N D U M

TO: Chairperson and Members
Jacksonville Historic Preservation Commission

FROM: Arimus T. Wells, Planning Services Manager – Historic Planning and Preservation
Community Planning Division, Historic Preservation Section

SUBJECT: Notification of Demolition Delay Permits (Section 320.407)

DATE: October 22, 2025

In accordance with the passage of Florida Senate Bill 180 (SB 180), the formal review process for demolition delay permits set forth in Section 320.407, Ordinance Code, is defunct. The Planning Department will continue to notify the Historic Preservation Commission of demolition permits and provide a cursory analysis about whether the subject properties possess any historical, architectural, or archaeological significance. As such, this memorandum serves as a notification for the following demolition permits:

<table>
<tr><th colspan="3">DD-25-10</th></tr>
<tr><th>Address</th><th>Florida Master Site File</th><th>Staff Analysis:</th></tr>
<tr><td>425 Church St E</td><td>DU07634 / DU07633</td><td rowspan="4">Based on Staff's preliminary findings, the residence at 425 Church St E would meet three (3) of the seven (7) criteria for local landmark designation.</td></tr>
<tr><th>Real Estate Number</th><th>National Register Status</th></tr>
<tr><td>073912-0200</td><td rowspan="2">Contributing Structure in the Downtown Jacksonville National Register District</td></tr>
<tr><th>Building Permit Number</th></tr>
<tr><td>B-25-254497</td><td></td></tr>
</table>

Pending Legislation

A NEW DAY.

City of Jacksonville, Florida

Donna Deegan, Mayor

Planning Department
214 North Hogan Street
Jacksonville, FL 32202
(904) 255-7800
www.jacksonville.gov

M E M O R A N D U M

TO: Chairperson and Members
Jacksonville Historic Preservation Commission

FROM: Arimus T. Wells, Planning Services Manager – Historic Planning and Preservation
Community Planning Division, Historic Preservation Section

SUBJECT: Historic Preservation Legislation

DATE: October 22, 2025

Final action on the following historic preservation items have taken place since the last Commission meeting. Please see the attached bill summaries for more details:

- **N/A**

The following historic preservation items are pending legislative action from City Council. Please see the attached bill summaries for more details:

- **N/A**

Notification of Improvement Projects

N. Old Business

Jacksonville
Historic Preservation
Commission

TDC Jax, LLC v. City of Jacksonville

IN THE CIRCUIT COURT, FOURTH JUDICIAL CIRCUIT, IN AND FOR DUVAL COUNTY, FLORIDA

CASE NO: 16-2024-CA-000087
DIVISION: CV-G

TDC JAX, LLC, a Florida limited
Liability company,

Petitioner,

v.

THE CITY OF JACKSONVILLE
Respondent.

_____/

ORDER DENYING PETITION FOR WRIT OF CERTIORARI

Petitioner challenges a decision of the Jacksonville City Council designating a building owned by Petitioner as a local historic landmark. In reviewing the City's decision, this Court employs a three-prong standard of review applicable to quasi-judicial decisions rendered by local government bodies. The three-part test consists of: (1) whether procedural due process was accorded, (2) whether the essential requirements of the law have been observed, and (3) whether the administrative findings and judgment are supported by competent, substantial evidence. Fla. Power & Light Co. v. City of Dania, 761 So. 2d 1089, 1092 (Fla. 2000); Haines City Community Dev. v. Heggs, 658 So. 2d 523, 530 (Fla. 1995). Petitioner argues the City's decision constitutes a departure from the essential requirements of the law and there is no competent, substantial evidence to support the conclusion that the property is suitable for preservation or restoration, as required by the City of Jacksonville Code of Ordinances.[1]

[1] In order to be eligible for designation as a historic landmark, a building must meet four criteria when the owner objects to the designation. The Petition only focuses on one criterion-the property's suitability for preservation or restoration.

The Court finds the City did not depart from the essential requirements of the law. In reaching its decision, the City has observed the framework of the controlling law. The historic landmark designation is grounded on the application of Code section 307.104(j)-(k) and positive findings relative to the requisite four out of seven criteria factors. The City has not substituted some unauthorized or arbitrary standard. Rather, it has employed the well-recognized and applicable codified law.

The Court further finds the historic landmark designation to be adequately supported by competent and substantial evidence. On the only contested point-the building's suitability for preservation or restoration, the City made a positive finding based largely on the Planning and Development Department's evaluation. The usual Department evaluation practice emphasizes inspection of the building's exterior and review of its historic permit activity. Here, the Department determined there are no alterations impacting the building's character or defining features. Moreover, the Department noted a well-preserved and robust exterior free from any significant deterioration or long-term neglect. The building was found to have retained its exterior integrity to a "remarkable degree."

The Petitioner seemingly argues that the City's designation should be invalidated because the evidence lacks an inspection of the building's interior. There is nothing in the record to suggest that a visual exterior inspection is patently insufficient for showing the building to be structurally intact and not in a dilapidated condition. While the evidence may admittedly not be dispositive, the Court finds it to be substantive and legally sufficient. On review, the Court's limited task is to determine if the evidence considered was competent and substantial. The appropriate weight and credibility to be assigned to it is entirely within the City's prerogative.

Other evidence included testimony from individuals having industry expertise directly

bearing on building preservation and restoration. The fact that those opinions may have been rightfully challenged by cross-examination or countervailing evidence does not make them invalid or unworthy of consideration by the City. Similarly, the fact that the building has been structurally intact and commercially viable as recently as 2018, though not dispositive, is competent circumstantial evidence of continuing vitality.

In the course of multiple hearings, written and testimonial evidence was presented and established a prima facie case in favor of preservation and restoration. Although the record presents conflicting and competing evidence, this Court's mandate is to determine whether it contains legally sufficient evidence to support the City's decision. See Dania, 761 So. 2d at 1092. This Court may not reweigh the evidence or come to its own, independent conclusions. See Heggs, 658 So. 2d at 530. Because the record does contain legally sufficient evidence the Court will not disturb the City's findings and ultimate decision. The Petition for Writ of Certiorari is **DENIED**.

DONE and ORDERED in Jacksonville, Duval County, Florida, this 8th day of October, 2025.

Michael Sharrit
Circuit Court Judge

Copies furnished via the Florida Courts E-Filing Portal to all counsel of record.

O. Design Issues

Jacksonville
Historic Preservation
Commission

P. Addendum

Jacksonville
Historic Preservation
Commission

Q. Adjournment

Jacksonville
Historic Preservation
Commission