SUBJECT: WILLOW BRANCH (PHASE II) CANAL REHABILITATION-REBID

BID #: CP-0636-19 **OPEN DATE:** 2019-10-09

GENERAL GOVERNMENT AWARDS COMMITTEE

KIND AND BASIS OF CONTRACT: CONSTRUCTION PARTICIPATION

AGENCY: PUBLIC WORKS

BASIS OF AWARD: TOTAL BASE BID -LOWEST RESPOSIVE, RESPONSIBLE BIDDER

NUMBER OF BIDS INVITED: (5) **NUMBER RECEIVED:** (6) **OTHER** (0)

SUMMARY OF BIDS AND RECOMMENDED ACTIONS:
Subject bid was awarded on 11/14/19 to Maer Homes, LLC dba Maer Construction (contract 10751) (PO 600763-20) in the amount of $831,115.22.

Recommend approval of Change Order #1 to Maer Homes, LLC dba Maer Construction in the deductive amount of ($12,699.77), for a revised total award amount not-to-exceed $818,415.45.

Funding for this award to be returned to account(s): 001360-565050-1-32111-381910 to be executed by contract change order through Office of General Counsel.

Attachments: Recommendation Memo, Change Order, Previous Award(s)

ANALYST: Marilyn Laidler
MARILYN LAIDLER

RESPECTFULLY SUBMITTED
GREGORY PEASE, CHIEF
PROCUREMENT DIVISION

CONCURRENCE BY: Robin G. Smith, P.E., Chief, Engineering and Construction Management

(ALL AWARD ACTIONS SUBJECT TO LAWFULLY APPROPRIATED FUNDS)
ACTION OF GGAC COMMITTEE ON RECOMMENDATIONS ABOVE

MEMBERS APPROVING _____ MEMBERS DISAPPROVING _____ DATE: _____

_____ _____ OTHER: _____

_____ _____

_____ _____

ACTION OF AWARDING AUTHORITY DATE _____

APPROVED _____ DISAPPROVED _____

OTHER _____

SIGNATURE OF AUTHENTICATION _____

City of Jacksonville, Florida

Lenny Curry, Mayor

Department of Public Works
Engineering & Construction Management Division
214 N. Hogan Street, 10th Floor
Jacksonville, FL 32202
(904) 255-8762
www.coj.net

ONE CITY. ONE JACKSONVILLE.

July 30, 2020

TO: Gregory W. Pease
Chief of Procurement

THRU: John P. Pappas, P.E.
Director

FROM: Robin G. Smith, P. E.
Chief, Engineering and Construction Management

Thomas G. McKnight
Capital Improvement Construction Manager

SUBJECT: Willow Branch (Phase III) Canal Rehabilitation- Rebid
BID# CP-0636-19
Contract 10751/ PO 600763-20

The subject contract was awarded under BID# CP-0636-19 in the amount of $831,115.22 to Maer Homes, LLC D/B/A Maer Construction LLC, Contract 10751. Change order #1 is detailed on the attached spreadsheet in the deductive amount of $12,699.77.

Accordingly, this is to recommend approval for change order 12 to Contract 10751 to Maer Homes, LLC D/B/A Maer Construction LLC, in the deductive amount of $12,699.77. The maximum indebtedness to the city will be $818,415.45.

Funding for this project should be encumbered as follows:

ACCOUNTS:	TOTAL
001360	
PRSC Parks & Rec Capital Projects- Parks and Recreation	
565050	
1	
32111-381910	
($12,699.77)	($12,699.77)

RGS/lw

Attachments

CITY OF JACKSONVILLE
DEPARTMENT OF PUBLIC WORKS
ENGINEERING DIVISION
CONSTRUCTION CHANGE ORDER

Change Order No. One (1) July 30, 2020

Description of Project Willow Branch Phase III Canal Rehabilitation- Rebid

Name of Contractor Maer Homes, LLC D/B/A Maer Construction LLC

Contractor's Address 2753 Rosseselle Street, Jacksonville, FL 32205

Contract No. 10751

Account No. 32111.167101.565050.001360.0000.0000.0000 Original Contract $831,115.22

+ Previous Change Order 0 $00.00 + Change Order No.1 ($12,699.77)

*See attached appendix for additional listings.

TOTAL REVISED CONTRACT $818,415.45

Bid Number CP-0636-19

Construction Completion Date September 24, 2020

Revised Construction Completion Date

Contract Expiration Date January 22, 2021

Revised Contract Expiration Date

In compliance with General Conditions of above-referenced contract, CONTRACTOR and OWNER do both hereby agree that the CONTRACTOR shall make the following changes, additions or deletions to the Work specified in the plans and specifications: See attached.

Justification: See attached.

By execution of this document, the Contractor acknowledges that all issues related to Contract Time and Compensation are resolved.

The Issuing Authority has looked over cost and pricing data for this change order and has determined that this change order is necessary and all costs are reasonable.

Accepted for Contractor Maer Homes, LLC D/B/A Maer Construction LLC

Signed _____ Attest _____

Title _____ Title _____

Date _____ Date _____

Signed Construction Management By _____
Issuing Authority Thomas G. McKnight Date
Capital Improvement Construction Manager

Signed Right-of-Way and Stormwater Maintenance By _____
Using Division Div/Department Head Date

Chief, Engineering & Construction Mgmt Div Date Assistant Counsel Date

Director of Public Works Date Mayor Date

Chief of Procurement Date Corporation Secretary Date

Director of Finance Date

MAER CONSTRUCTION, LLC.
WILLOW BRANCH (PHASE II) CANAL REHABILITATION - REBID
CONTRACT NO. 10751

CHANGE ORDER # 1
7/23/20

NBR	MASTER ITEM DESCRIPTION	QUANTITY	UOM	UNIT COST	NET ADDITION	NET DELETION	TOTALS
	ADDITIONAL SCOPE						
1	PLAN REVISION NO. 2 DRAINAGE CHANGES						
	PIPE CULVERT, ROUND RCP, 66", S/CD	288.000	LF	$396.37	$114,154.56		
	DITCH BOTTOM INLET, TYPE H	1.000	EA	$8,435.67	$8,435.67		
	CAST IN PLACE (CIP) DRAINAGE STRUCTURE	12.000	CY	$3,000.00	$36,000.00		
	C-I-P CONCRETE RETAINING WALL (4-5')	-368.000	LF	$355.00		($130,640.00)	
	CONNECT PROPOSED C-I-P RETAINING WALL TO EXISTING WALL	-3.000	EA	$13,550.00		($40,650.00)	

JUSTIFICATION: The original design for the north segment of the project included removing and reconstructing the existing retaining walls, and extending the existing eastern canal slope towards the R/W line in an attempt to stabilize it. During preconstruction local resident outreach, the resident residing east of the canal advised they had observed significant soil erosion on the existing canal slopes during severe storm events. The soil erosion was significant enough to encroach into the resident's driveway area. The project's original design would have left these canal slopes in place. Additionally, the existing retaining walls were in close proximity to private property structures. There was concern about impacting the private property structures during the retaining wall removal and reconstruction. With all this in consideration, the EOR revised the design for the north segment to eliminate the retaining wall reconstruction and open channel canal slopes, and install large pipe culvert and drainage structures. The contractor's proposed unit prices for the 66" pipe culvert and Type H Ditch Bottom Inlet matched FDOT Statewide Average Unit Prices and are considered reasonable prices for the scope of work. The contractor's proposed unit price for the CIP Drainage Structures is based on a CY rate that could not be verified through FDOT Statewide Averages or other cost history resources due to the uniqueness of the drainage structures. An engineer's estimate was developed to estimate the costs for the CIP drainage structures. The engineer's estimate was consistent with the contractor's overall price for the CIP drainage structures; therefore, justifying the contractor's unit price for that work item.

TOTAL ADDITIONAL SCOPE	**$158,590.23**	**($171,290.00)**	
NET TOTAL ADDITIONAL SCOPE			**($12,699.77)**
SUBTOTAL CHANGE ORDER NO. 1	**$158,590.23**	**($171,290.00)**	
NET TOTAL CHANGE ORDER NO. 1	**($12,699.77)**		

MAERConstruction
410 Blanding Boulevard Suite 10-259
Orange Park, Florida 32073
(904)329-3277

Willow Branch Plan Revision Breakdown

Item Number	Description	Qty	Unit	Unit Price	Total Price
1	Pipe Culvert Optional Material Round 66"	288	LF	$ 396.37	$ 114,154.56
2	CIP Structures	12	CY	$ 3,000.00	$ 36,000.00
3	Inlets Ditch Bottom Modify	1	EA	$ 8,435.67	$ 8,435.67
4	CIP Retaining Wall(4'-5')	-368	LF	$ 355.00	$ (130,640.00)
5	Connect Proposed CIP retaining wall to existing wall	-3	EA	$ 13,550.00	$ (40,650.00)

$	(12,699.77)

ENGINEERS ESTIMATE
FOR CHANGE ORDER

PROJECT:	COJ Willow Branch Canal Rehabilitation
CONTRACT NO.:	10751
CHANGE ORDER NO.:	1
CONTRACTOR:	MAER Construction
DESCRIPTION OF WORK:	Plan Revision 2 - CIP Drainage Structures
DATE:	7/6/2020

LABOR ESTIMATE

POSITION	QTY.	UNIT	RATE	BURDEN RATE %	AMOUNT	COMMENT
Foreman	114	Hrs.	$ 30.00	39.17%	$ 4,759.61	
Skilled (2)	228	Hrs.	$ 18.50	39.17%	$ 5,870.19	
Common (1)	114	Hrs.	$ 14.00	39.17%	$ 2,221.15	
SUBTOTAL WITH BURDEN					$ 12,850.96	
MARKUP		15.0%			$ 1,927.64	
TOTAL LABOR COST					$ 14,778.60	

EQUIPMENT ESTIMATE

EQUIPMENT	QTY.	UNIT	RATE	AMOUNT	COMMENT
Deere 210G Trackhoe (Active)	57	Hrs.	$ 88.20	$ 5,027.40	
Deere 210G Trackhoe (Standby)	57	Hrs.	$ 22.48	$ 1,281.36	
4" Double Diaphram Pump	114	Hrs.	$ 12.88	$ 1,468.32	
F-150 Pickup - Foreman	114	Hrs.	$ 20.43	$ 2,329.02	
Concrete Bucket	114	Hrs.	$ 4.08	$ 465.12	
Concrete Vibrator	114	Hrs.	$ 1.57	$ 178.98	
Chop Saw	114	Hrs.	$ 3.66	$ 417.24	
Generator	114	Hrs.	$ 5.99	$ 682.86	
Pipe Plug	2	Weeks	$ 585.00	$ 1,170.00	
EQUIPMENT SUBTOTAL				$ 13,020.30	
MARKUP		15.0%		$ 1,953.05	
TOTAL EQUIPMENT COST				$ 14,973.35	

MATERIALS ESTIMATE

ITEM	QTY.	UNIT	RATE	AMOUNT	COMMENT
Class IV 4500 PSI Concrete	10	CY	$ 115.00	$ 1,150.00	
Class NS 2500 PSI Concrete	3	CY	$ 105.00	$ 315.00	
#4 Steel Reinforcement Dowels	36	EA	$ 2.50	$ 90.00	
#4 Steel Reinforcement Bars (20 LF)	18	EA	$ 15.00	$ 270.00	
Epoxy Adhesive for Dowels	4	EA	$ 43.00	$ 172.00	
Misc. Materials (Plywood, Lumber, Ties, 57 Stone, Brick, Etc.)	1	LS	$ 300.00	$ 300.00	
MATERIALS SUBTOTAL				$ 2,297.00	
SUBTOTAL W/TAX		7.0%		$ 160.79	
MATERIALS SUBTOTAL				$ 2,457.79	
MARKUP		15.0%		$ 368.67	
TOTAL MATERIALS COST				$ 2,826.46	

SUBCONTRACTS

NAME	QTY.	UNIT	RATE	AMOUNT	COMMENT
Standard Precast - Top Slab	2	EA	$ 2,000.00	$ 4,000.00	
SUBTOTAL SUBCONTRACTS				$ 4,000.00	
MARKUP		10%		$ 400.00	
TOTAL SUBCONTRACTS				$ 4,400.00	

TOTALS

TOTAL LABOR, EQUIPMENT, & MATERIAL COST	$ 36,978.40
TOTAL COST:	$ 36,978.40

Prepared By:

Reid Harriett
Senior Project Engineer

COJ Willow Branch Canal Rehabilitation Project
COJ Contract No. 10751

Engineer's Estimate of Plan Rev. 2 CIP Drainage Structure Construction Time

CIP Structure No. 1	
Activity	**Hours**
Setup dewatering, excavate for footer, place forms & bedding stone	8
Drill and install all rebar dowels	4
Place and tie steel reinforcement for footer	4
Pour and construct footer	4
Remove forms from footer and point and patch	4
Place and tie vertical wall reinforcing steel	4
Construct and place vertical wall forms	4
Pour and construct wall	4
Remove forms from wall, point and patch, pour invert concrete	6
Chip existing wall and install dowels for level pad	4
Form and pour level pad for top slab	4
Install top slab	4
Total Time	**54**
CIP Structure No. 2	
Setup dewatering, excavate for bottom slab, place forms & bedding stone	8
Drill and install all rebar dowels	6
Place and tie steel reinforcement for bottom slab	4
Pour and construct bottom slab	4
Remove forms from bottom slab and point and patch	4
Place and tie vertical wall reinforcing steel	8
Construct and place vertical wall forms	8
Pour and construct walls	4
Remove forms from walls, point and patch, pour invert concrete	6
Install top slab	4
Form and pour slot drain concrete pad	4
Total Time	**60**
Overall Total Time	**114**

MAER Construction
Project: Willow Branch Park
Contract No.: 10751
County: Duval

List of Clerical Staff	Pro-rated Time to Contract
Project Manager	50%
Project Coordinator	50%

List of On-site Personnel	
Superintendent	100%
Foreman	100%
Excavator Operator	100%
Loader Operator	100%
Laborer	100%
Laborer	100%
Laborer	100%

Table 4-3.2.1	
FICA	7.6500%
FUTA	0.8000%
SUTA	2.7000%
Health Insurance	0.0000%
Vacation and Holidays	6.0000%
Retirement Benefits	0.0000%
Workers Compensation	7.4600%
Per Diem	0.0000%
General Liability	14.5600%
Total	39.1700%

Michael Gonzalez, Operations Manager

7/9/2020
Date

EquipmentWatch.

www.equipmentwatch.com

All prices shown in US dollars ($)

Rental Rate Blue Book®

July 9, 2020

Deere 210G LC
Crawler Mounted Hydraulic Excavators

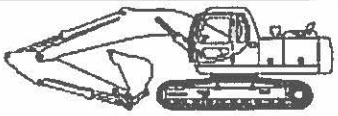

Size Class:
21.1 - 24.0 MTons
Weight:
N/A

Configuration for 210G LC

Operating Weight	**25.23 mt**	Power Mode	**Diesel**

Blue Book Rates

** FHWA Rate is equal to the monthly ownership cost divided by 176 plus the hourly estimated operating cost.

	Ownership Costs				Estimated Operating Costs	FHWA Rate**
	Monthly	**Weekly**	**Daily**	**Hourly**	**Hourly**	**Hourly**
Published Rates	USD $8,195.00	USD $2,295.00	USD $575.00	USD $86.00	USD $43.24	USD $89.80
Adjustments						
Region (Florida: 96.6%)	(USD $278.63)	(USD $78.03)	(USD $19.55)	(USD $2.92)		
Model Year (2019: 99.95%)	(USD $4.00)	(USD $1.12)	(USD $0.28)	(USD $0.04)		
Adjusted Hourly Ownership Cost (100%)	-	-	-	-		
Hourly Operating Cost (100%)					-	
Total:	**USD $7,912.37**	**USD $2,215.85**	**USD $555.17**	**USD $83.03**	**USD $43.24**	**USD $88.20**

Non-Active Use Rates	**Hourly**
Standby Rate	USD $22.48
Idling Rate	USD $60.99

Rate Element Allocation

Element	Percentage	Value
Depreciation (ownership)	40%	USD $3,278.00/mo
Overhaul (ownership)	49%	USD $4,015.55/mo
CFC (ownership)	6%	USD $491.70/mo
Indirect (ownership)	5%	USD $409.75/mo
Fuel (operating) @ USD 2.40	37%	USD $16.03/hr

Revised Date: 2nd half 2020

These are the most accurate rates for the selected Revision Date(s). However, due to more frequent online updates, these rates may not match Rental Rate Blue Book Print. Visit the Cost Recovery Product Guide on our Help page for more information.

The equipment represented in this report has been exclusively prepared for KENNY GEISENDORFF (KGeisendorff@via-cs.com)

www.equipmentwatch.com

All material herein © 2003-2020 Informa All rights reserved.

EquipmentWatch.

www.equipmentwatch.com

All prices shown in US dollars ($)

Rental Rate Blue Book®

April 15, 2020

Miscellaneous 4 DOUBLE DIESEL
Diaphragm Pumps

Size Class:
4 Inch & Over
Weight:
1400 lbs

Configuration for 4 DOUBLE DIESEL

Horsepower	6.0	Power Mode	Diesel
Pump Capacity	14000.0 gal/hr	Size	4.0 in

Blue Book Rates

** FHWA Rate is equal to the monthly ownership cost divided by 176 plus the hourly estimated operating cost.

	Ownership Costs				Estimated Operating Costs	FHWA Rate**
	Monthly	Weekly	Daily	Hourly	Hourly	Hourly
Published Rates	USD $1,355.00	USD $380.00	USD $95.00	USD $14.00	USD $5.76	USD $13.46
Adjustments						
Region (Florida: 92.5%)	(USD $101.63)	(USD $28.50)	(USD $7.13)	(USD $1.05)		
Model Year (2019: 100%)	-	-	-	-		
Adjusted Hourly Ownership Cost (100%)	-	-	-	-		
Hourly Operating Cost (100%)					-	
Total:	**USD $1,253.38**	**USD $351.50**	**USD $87.88**	**USD $12.95**	**USD $5.76**	**USD $12.88**

Non-Active Use Rates

	Hourly
Standby Rate	USD $3.56
Idling Rate	USD $7.85

Rate Element Allocation

Element	Percentage	Value
Depreciation (ownership)	16%	USD $216.80/mo
Overhaul (ownership)	76%	USD $1,029.80/mo
CFC (ownership)	3%	USD $40.65/mo
Indirect (ownership)	5%	USD $67.75/mo
Fuel (operating) @ USD 3.07	13%	USD $0.73/hr

Revised Date: 1st half 2020

These are the most accurate rates for the selected Revision Date(s). However, due to more frequent online updates, these rates may not match Rental Rate Blue Book Print. Visit the Cost Recovery Product Guide on our Help page for more information.

The equipment represented in this report has been exclusively prepared for ROBERT RUPERT (rrupert@gpinet.com)

www.equipmentwatch.com

All material herein © 2003-2020 Informa All rights reserved.

EquipmentWatch.

www.equipmentwatch.com

All prices shown in US dollars ($)

Rental Rate Blue Book®

February 25, 2020

Miscellaneous 4-12MC
Concrete Saws

Size Class:
To 10 HP
Weight:
N/A

Configuration for 4-12MC

Blade Capacity Diameter	13.0 in	Horsepower	9.0
Maximum Cutting Depth	6.5	Power Mode	Gasoline
Type	Concrete		

Blue Book Rates

** FHWA Rate is equal to the monthly ownership cost divided by 176 plus the hourly estimated operating cost.

	Ownership Costs				Estimated Operating Costs	FHWA Rate**
	Monthly	Weekly	Daily	Hourly	Hourly	Hourly
Published Rates	USD $195.00	USD $55.00	USD $14.00	USD $2.00	USD $2.64	USD $3.75
Adjustments						
Region (Florida: 92.4%)	(USD $14.82)	(USD $4.18)	(USD $1.06)	(USD $0.15)		
Model Year (2020: 100%)	-	-	-	-		
Adjusted Hourly Ownership Cost (100%)	-	-	-	-		
Hourly Operating Cost (100%)					-	
Total:	**USD $180.18**	**USD $50.82**	**USD $12.94**	**USD $1.85**	**USD $2.64**	**USD $3.66**

Non-Active Use Rates

	Hourly
Standby Rate	USD $0.51
Idling Rate	USD $2.88

Rate Element Allocation

Element	Percentage	Value
Depreciation (ownership)	42%	USD $81.90/mo
Overhaul (ownership)	44%	USD $85.80/mo
CFC (ownership)	6%	USD $11.70/mo
Indirect (ownership)	8%	USD $15.60/mo
Fuel (operating) @ USD 2.51	70%	USD $1.86/hr

Revised Date: 1st half 2020

These are the most accurate rates for the selected Revision Date(s). However, due to more frequent online updates, these rates may not match Rental Rate Blue Book Print. Visit the Cost Recovery Product Guide on our Help page for more information.

The equipment represented in this report has been exclusively prepared for ROBERT RUPERT (rrupert@gpinet.com)

www.equipmentwatch.com

All material herein © 2003-2020 Informa All rights reserved.

EquipmentWatch.

www.equipmentwatch.com

All prices shown in US dollars ($)

Rental Rate Blue Book®

June 24, 2020

Miscellaneous GAS 6,000 W
Small Generator Sets

Size Class:
5,001 - 10,000 Watts
Weight:
N/A

Configuration for GAS 6,000 W

Horsepower	13.0	Power Mode	Gasoline
Prime Output	6000.0 W		

Blue Book Rates

** FHWA Rate is equal to the monthly ownership cost divided by 176 plus the hourly estimated operating cost.

	Ownership Costs				Estimated Operating Costs	FHWA Rate**
	Monthly	Weekly	Daily	Hourly	Hourly	Hourly
Published Rates	USD $215.00	USD $60.00	USD $15.00	USD $2.00	USD $4.85	USD $6.07
Adjustments						
Region (Florida: 93.7%)	(USD $13.55)	(USD $3.78)	(USD $0.94)	(USD $0.13)		
Model Year (2020: 100%)	-	-	-	-		
Adjusted Hourly Ownership Cost (100%)	-	-	-	-		
Hourly Operating Cost (100%)					-	
Total:	**USD $201.46**	**USD $56.22**	**USD $14.06**	**USD $1.87**	**USD $4.85**	**USD $5.99**

Non-Active Use Rates

	Hourly
Standby Rate	USD $0.57
Idling Rate	USD $4.09

Rate Element Allocation

Element	Percentage	Value
Depreciation (ownership)	47%	USD $101.05/mo
Overhaul (ownership)	31%	USD $66.65/mo
CFC (ownership)	9%	USD $19.35/mo
Indirect (ownership)	12%	USD $25.80/mo
Fuel (operating) @ USD 2.51	61%	USD $2.95/hr

Revised Date: 1st half 2020

These are the most accurate rates for the selected Revision Date(s). However, due to more frequent online updates, these rates may not match Rental Rate Blue Book Print. Visit the Cost Recovery Product Guide on our Help page for more information.

The equipment represented in this report has been exclusively prepared for KENNY GEISENDORFF (KGeisendorff@via-cs.com)

www.equipmentwatch.com

All material herein © 2003-2020 Informa All rights reserved.

EquipmentWatch.

www.equipmentwatch.com

All prices shown in US dollars ($)

Rental Rate Blue Book®

July 6, 2020

Miscellaneous 4X2 1/2 285 CONV GAS
On-Highway Light Duty Trucks

Size Class:
200 - 299 HP
Weight:
N/A

Configuration for 4X2 1/2 285 CONV GAS

Axle Configuration	4X2	Cab Type	Conventional
Horsepower	285 hp	Power Mode	Gasoline
Ton Rating	1/2		

Blue Book Rates

** FHWA Rate is equal to the monthly ownership cost divided by 176 plus the hourly estimated operating cost.

	Ownership Costs				Estimated Operating Costs	FHWA Rate**
	Monthly	Weekly	Daily	Hourly	Hourly	Hourly
Published Rates	USD $910.00	USD $255.00	USD $64.00	USD $10.00	USD $15.42	USD $20.59
Adjustments						
Region (Florida: 96.9%)	(USD $28.21)	(USD $7.91)	(USD $1.98)	(USD $0.31)		
Model Year (2020: 100%)	-	-	-	-		
Adjusted Hourly Ownership Cost (100%)	-	-	-	-		
Hourly Operating Cost (100%)					-	
Total:	**USD $881.79**	**USD $247.10**	**USD $62.02**	**USD $9.69**	**USD $15.42**	**USD $20.43**

Non-Active Use Rates

	Hourly
Standby Rate	USD $2.51
Idling Rate	USD $16.76

Rate Element Allocation

Element	Percentage	Value
Depreciation (ownership)	56%	USD $509.60/mo
Overhaul (ownership)	29%	USD $263.90/mo
CFC (ownership)	3%	USD $27.30/mo
Indirect (ownership)	12%	USD $109.20/mo
Fuel (operating) @ USD 2.17	76%	USD $11.75/hr

Revised Date: 2nd half 2020

These are the most accurate rates for the selected Revision Date(s). However, due to more frequent online updates, these rates may not match Rental Rate Blue Book Print. Visit the Cost Recovery Product Guide on our Help page for more information.

The equipment represented in this report has been exclusively prepared for KENNY GEISENDORFF (KGeisendorff@via-cs.com)

www.equipmentwatch.com

All material herein © 2003-2020 Informa All rights reserved.

EquipmentWatch.

www.equipmentwatch.com

All prices shown in US dollars ($)

Rental Rate Blue Book®

June 24, 2020

Miscellaneous BDGP2
Bottom Dump General Purpose Manual Buckets

Size Class:
1-1/4 - 2 CY
Weight:
1045 lbs

Configuration for BDGP2

Capacity	2.0 cu yd	Duty	General Purpose
Type	Bottom Dump		

Blue Book Rates

** FHWA Rate is equal to the monthly ownership cost divided by 176 plus the hourly estimated operating cost.

	Ownership Costs				Estimated Operating Costs	FHWA Rate**
	Monthly	Weekly	Daily	Hourly	Hourly	Hourly
Published Rates	USD $515.00	USD $145.00	USD $36.00	USD $5.00	USD $1.38	USD $4.31
Adjustments						
Region (Florida: 92.4%)	(USD $39.14)	(USD $11.02)	(USD $2.74)	(USD $0.38)		
Model Year (2020: 100%)	-	-	-	-		
Adjusted Hourly Ownership Cost (100%)	-	-	-	-		
Hourly Operating Cost (100%)					-	
Total:	**USD $475.86**	**USD $133.98**	**USD $33.26**	**USD $4.62**	**USD $1.38**	**USD $4.08**

Non-Active Use Rates

	Hourly
Standby Rate	USD $1.35
Idling Rate	USD $2.70

Rate Element Allocation

Element	Percentage	Value
Depreciation (ownership)	54%	USD $278.10/mo
Overhaul (ownership)	27%	USD $139.05/mo
CFC (ownership)	7%	USD $36.05/mo
Indirect (ownership)	12%	USD $61.80/mo

Fuel cost data is not available for these rates.

Revised Date: 1st half 2020

These are the most accurate rates for the selected Revision Date(s). However, due to more frequent online updates, these rates may not match Rental Rate Blue Book Print. Visit the Cost Recovery Product Guide on our Help page for more information.

The equipment represented in this report has been exclusively prepared for KENNY GEISENDORFF (KGeisendorff@via-cs.com)

www.equipmentwatch.com

All material herein © 2003-2020 Informa All rights reserved.

EquipmentWatch.

www.equipmentwatch.com

All prices shown in US dollars ($)

Rental Rate Blue Book®

June 24, 2020

Miscellaneous 2-7/21
Motor-In-Head Concrete Vibrators

Size Class:
Electric Powered
Weight:
N/A

Configuration for 2-7/21

Head Diameter	**2.5'**	Horsepower	**2.0**
Power Mode	**Electric**	Shaft Length	**16.0 ft**

Blue Book Rates

** FHWA Rate is equal to the monthly ownership cost divided by 176 plus the hourly estimated operating cost.

	Ownership Costs				Estimated Operating Costs	FHWA Rate**
	Monthly	**Weekly**	**Daily**	**Hourly**	**Hourly**	**Hourly**
Published Rates	USD $210.00	USD $59.00	USD $15.00	USD $2.00	USD $0.47	USD $1.66
Adjustments						
Region (Florida: 92.4%)	(USD $15.96)	(USD $4.48)	(USD $1.14)	(USD $0.15)		
Model Year (2020: 100%)	-	-	-	-		
Adjusted Hourly Ownership Cost (100%)	-	-	-	-		
Hourly Operating Cost (100%)					-	
Total:	**USD $194.04**	**USD $54.52**	**USD $13.86**	**USD $1.85**	**USD $0.47**	**USD $1.57**

Non-Active Use Rates

	Hourly
Standby Rate	USD $0.55
Idling Rate	USD $1.10

Rate Element Allocation

Element	Percentage	Value
Depreciation (ownership)	62%	USD $130.20/mo
Overhaul (ownership)	26%	USD $54.60/mo
CFC (ownership)	5%	USD $10.50/mo
Indirect (ownership)	8%	USD $16.80/mo

Fuel cost data is not available for these rates.

Revised Date: 1st half 2020

These are the most accurate rates for the selected Revision Date(s). However, due to more frequent online updates, these rates may not match Rental Rate Blue Book Print. Visit the Cost Recovery Product Guide on our Help page for more information.

The equipment represented in this report has been exclusively prepared for KENNY GEISENDORFF (KGeisendorff@via-cs.com)

www.equipmentwatch.com

All material herein © 2003-2020 Informa All rights reserved.

Curbside Service Now Available
Ready to fulfill your equipment needs without leaving your vehicle.

LEARN MORE

Image Under Construction

Cat Class: 155-1175

36" x 60" Sewer Plug

Sewer plugs are used to block off pipelines during bypass, rehabilitation and maintenance applications. The plug is positioned inside the pipeline and then expanded to fit using compressed air from an outside source. Plug accommodates pipeline with 36" to 60" diameter. Made with domehead feature to inflate and expanded to fill pipeline.

- Block pipelines for applications
- Expands using compressed air
- Accommodates 36" to 60" diameter
- Domehead feature

Online Rate:
1 Day: **$235** USD 1 Week: **$585** USD 4 Weeks: **$1,780** USD
The displayed rates do not include the taxes or optional charges that may be selected later in the check-out process

+ ADD

21 oz Pure 50 Dual Cartridge 2 Part Epoxy Anchoring System for DOT

Fastenal Part No. (SKU)	2141225
Manufacturer Part No.	08605-PWR
UNSPSC	31201607
Manufacturer	Powers™

This is a Catalog Item

Wholesale: $630.48 / case of 12

Online Price: $504.36 / case of 12

Unit Price: $42.03 / each

QTY (# of cases) 1 ADD

Compliance

Alternative Items (1)

SKU:11562801
TE1+ Epoxy Adhesive Anchor Nozzle
Included 21oz
Manufacturer
FPAS®

1

Online Price:$109.32 / case of 4
Unit Price:$27.33 / package

Available Inventory

Product Attributes

Application	Bonding threaded rod, rebar, and concrete
Color	Gray
Container Size	21 oz
Container Type	Dual Cartridge
Curing Time	12 min - 90 min
Series	Pure50+
Specification	VOC Compliant
Style	2 - Component
Temperature	50°F - 104°F
Type	Anchoring Epoxy
Working Time	4 hr - 24 hr
Product Weight	30.336
UOM	case of 12

Notes

AC50 Silver is a 2-component adhesive anchoring system.

- Designed for bonding threaded rod and reinforcing bar hardware into drilled holes in solid concrete base materials. For DOT applications

DOT Applications

Supply Chain

Availability	Available Inventory Check Other Locations
Direct Ship	Ships TOMORROW

Some restrictions apply, login to see shipping methods.

Related Items (1)

SKU:S1961
20oz FPAS® Pro Grade Epoxy Gun

Manufacturer
FPAS®

Online Price:$88.22 / each

1

Available Inventory

Home / Building Materials / Concrete, Cement & Masonry / Rebar & Remesh / Rebar

Customers Who Viewed This Also Viewed

Weyerhaeuser 1/2 in x 4 ft. #4 Rebar

(220)

$3.97

Weyerhaeuser 1/2 in. x 10 ft. #4 Rebar

(266)

$6.65

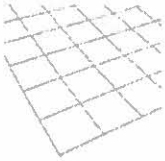

Nucor 42 in. x 7 ft. Rebar

(43)

$9.15

1/2 in. x 20 ft. #4 Rebar

(153)

$9.47

1/2
Re
Bu

$3

Internet #202094274 Model # 05152 Store SKU #106151

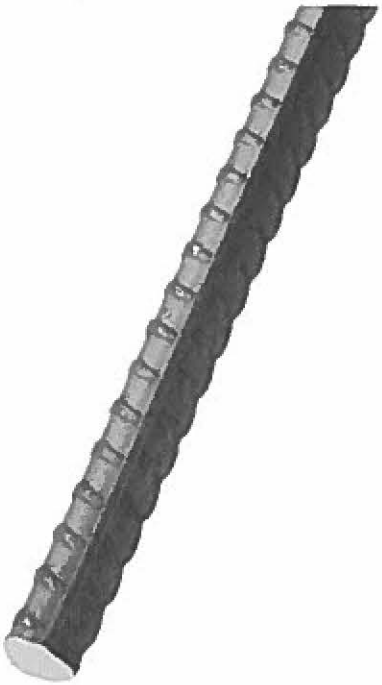

Atlantic And Girvin

✔202 in stock | Aisle: 63 Bay: 013 | Text to Me

Share Save to Favorites Print

1/2 in x 2 ft. #4 Rebar

(422) Write a Review Questions & Answers (15)

- Ideal for connector ties, concrete projects and forming stakes
- Made of durable, unfinished steel
- Easy to use and install

$2.47

Save up to $100 on your qualifying purchase.
Apply for a Home Depot Consumer Card

Product Length (in.): **24**

12 | **24**

How to Get It

Store Pickup	**Ship to Home**	**Scheduled Delivery**
Available	Not available for this item	As soon as **Tomorrow**
FREE		**$8.99**

202 in stock at Atlantic And Girvin.
Check Nearby Stores

Due to order volume, this item may not be available for pickup until **tomorrow.**

- 1 +

Add to Cart

— or —

Buy now with

Product Overview

Weyerhaeuser 1/2 in. x 2 ft. Rebar is made of an unfinished-steel material and is suitable for use in forming stakes for gardens, tents and sprinkler heads. It can also be used for connector ties and concrete projects.

- Unfinished-steel material
- Used for forming stakes for gardens, tents and sprinkler heads, connector ties and concrete projects
- Deformed rebar

Florida Department of Transportation
Item Average Unit Cost
From 2019/05/01 to 2020/04/30
Statewide

Contract Type: CC
Displaying: VALID ITEMS WITH HITS
From: 0102 1 To: 9999999

Item	No. of Conts	Weighted Average	Total Amount	Total Quantity	Unit Meas	Obs?	Description
0430174230	7	$134.35	$63,144.18	470.000	LF	N	PIPE CULVERT, OPTIONAL MATERIAL, OTHER SHAPE - ELLIP/ARCH, 30"SD
0430174236	2	$156.69	$64,085.20	409.000	LF	N	PIPE CULVERT, OPTIONAL MATERIAL, OTHER SHAPE - ELLIP/ARCH, 36"SD
0430174242	1	$717.03	$5,736.24	8.000	LF	N	PIPE CULVERT, OPTIONAL MATERIAL, ELLIP/OTHER, 42"SD
0430175112	12	$65.89	$90,594.50	1,375.000	LF	N	PIPE CULVERT,OPTIONAL MATERIAL,ROUND, 12"S/CD
0430175115	39	$125.99	$552,952.70	4,389.000	LF	N	PIPE CULVERT,OPTIONAL MATERIAL,ROUND, 15"S/CD
0430175118	92	$67.01	$17,041,990.91	254,315.000	LF	N	PIPE CULVERT,OPTIONAL MATERIAL,ROUND, 18"S/CD
0430175124	65	$76.53	$8,309,232.95	108,581.000	LF	N	PIPE CULVERT,OPTIONAL MATERIAL,ROUND, 24"S/CD
0430175130	37	$109.71	$5,966,355.67	54,383.000	LF	N	PIPE CULVERT, OPT MATERIAL, ROUND, 30"S/CD
0430175136	34	$127.95	$5,556,585.21	43,428.000	LF	N	PIPE CULVERT, OPT MATERIAL, ROUND, 36"S/CD
0430175142	18	$164.02	$3,456,810.52	21,075.000	LF	N	PIPE CULVERT, OPT MATERIAL, ROUND, 42"S/CD
0430175148	16	$217.73	$3,208,411.12	14,736.000	LF	N	PIPE CULVERT, OPT MATERIAL, ROUND, 48"S/CD
0430175154	9	$257.21	$1,573,077.95	6,116.000	LF	N	PIPE CULVERT, OPT MATERIAL, ROUND, 54"S/CD
0430175160	5	$338.48	$1,225,979.52	3,622.000	LF	N	PIPE CULVERT, OPT MATERIAL, ROUND, 60"S/CD
* 0430175166	2	$396.37	$699,995.92	1,766.000	LF	N	PIPE CULVERT, OPT MATERIAL, ROUND, 66"S/CD *
0430175172	3	$406.85	$563,900.00	1,386.000	LF	N	PIPE CULVERT, OPT MATERIAL, ROUND, 72"S/CD
0430175196	1	$900.00	$1,283,400.00	1,426.000	LF	N	PIPE CULVERT, OPT MATERIAL, ROUND, 96"S/CD
0430175215	4	$91.18	$161,664.00	1,773.000	LF	N	PIPE CULVERT,OPTIONAL MATERIAL,OTHER-ELIP/ARCH, 15"S/CD
0430175218	32	$99.93	$2,333,522.11	23,351.000	LF	N	PIPE CULVERT,OPTIONAL MATERIAL,OTHER-ELIP/ARCH, 18"S/CD
0430175224	18	$120.70	$849,859.78	7,041.000	LF	N	PIPE CULVERT,OPTIONAL MATERIAL,OTHER SHAPE-ELIP/ARCH, 24"S/CD

Florida Department of Transportation
Item Average Unit Cost
From 2019/05/01 to 2020/04/30
Statewide

Contract Type: CC
Displaying: VALID ITEMS WITH HITS
From: 0102 1 To: 9999999

Item	No. of Conts	Weighted Average	Total Amount	Total Quantity	Unit Meas	Obs?	Description
0425 1584	1	$18,341.37	$18,341.37	1.000	EA	N	INLETS, DT BOT, TYPE H, J BOTTOM >10'
* 0425 1589	10	$8,435.67	$784,516.96	93.000	EA	N	INLETS, DT BOT, TYPE H, MODIFY *
0425 1601	2	$6,735.00	$26,940.00	4.000	EA	N	INLETS, DT BOT, TYPE J, <10'
0425 1603	1	$6,900.00	$27,600.00	4.000	EA	N	INLETS, DT BOT, TYPE J, J BOT, <10'
0425 1701	29	$4,063.50	$1,414,097.54	348.000	EA	N	INLETS, GUTTER, TYPE S, <10'
0425 1702	2	$5,712.42	$34,274.50	6.000	EA	N	INLETS, GUTTER, TYPE S, >10'
0425 1703	6	$7,791.44	$311,657.47	40.000	EA	N	INLETS, GUTTER, TYPE S, J BOTTOM <10'
0425 1704	1	$8,130.00	$32,520.00	4.000	EA	N	INLETS, GUTTER, TYPE S, J BOTTOM, >10'
0425 1705	3	$3,657.14	$25,600.00	7.000	EA	N	INLETS, GUTTER, TYPE S, PARTIAL
0425 1711	10	$4,147.24	$170,036.66	41.000	EA	N	INLETS, GUTTER, TYPE V, <10'
0425 1712	2	$4,780.00	$33,460.00	7.000	EA	N	INLETS, GUTTER, TYPE V, >10'
0425 1713	4	$7,554.39	$67,989.48	9.000	EA	N	INLETS, GUTTER, TYPE V, J BOT, <10'
0425 1714	2	$7,032.25	$56,258.00	8.000	EA	N	INLETS, GUTTER, TYPE V, J BOTTOM, >10'
0425 1715	1	$3,500.00	$7,000.00	2.000	EA	N	INLETS, GUTTER, TYPE V, PARTIAL
0425 1781	5	$5,001.97	$225,088.76	45.000	EA	N	INLETS, MEDIAN BARRIER, TYPE 1, <=10'
0425 1783	2	$5,787.50	$92,600.00	16.000	EA	N	INLETS, MEDIAN BARRIER, TYPE 1, J BOT, <10'
0425 1785	1	$4,600.00	$4,600.00	1.000	EA	N	INLETS, MEDIAN BARRIER, TYPE 1, PARTIAL
0425 1791	2	$5,510.34	$958,800.00	174.000	EA	N	INLETS, MEDIAN BARRIER, TYPE 2, J BOT,< =10'
0425 1792	2	$9,766.67	$29,300.00	3.000	EA	N	INLETS, MEDIAN BARRIER, TYPE 2, >10'
0425 1793	2	$7,860.00	$39,300.00	5.000	EA	N	INLETS, MEDIAN BARRIER, TYPE 2, J BOT, <10'
0425 1794	1	$15,000.00	$15,000.00	1.000	EA	N	INLETS, MEDIAN BARRIER, TYPE 2, J BOT, >10'

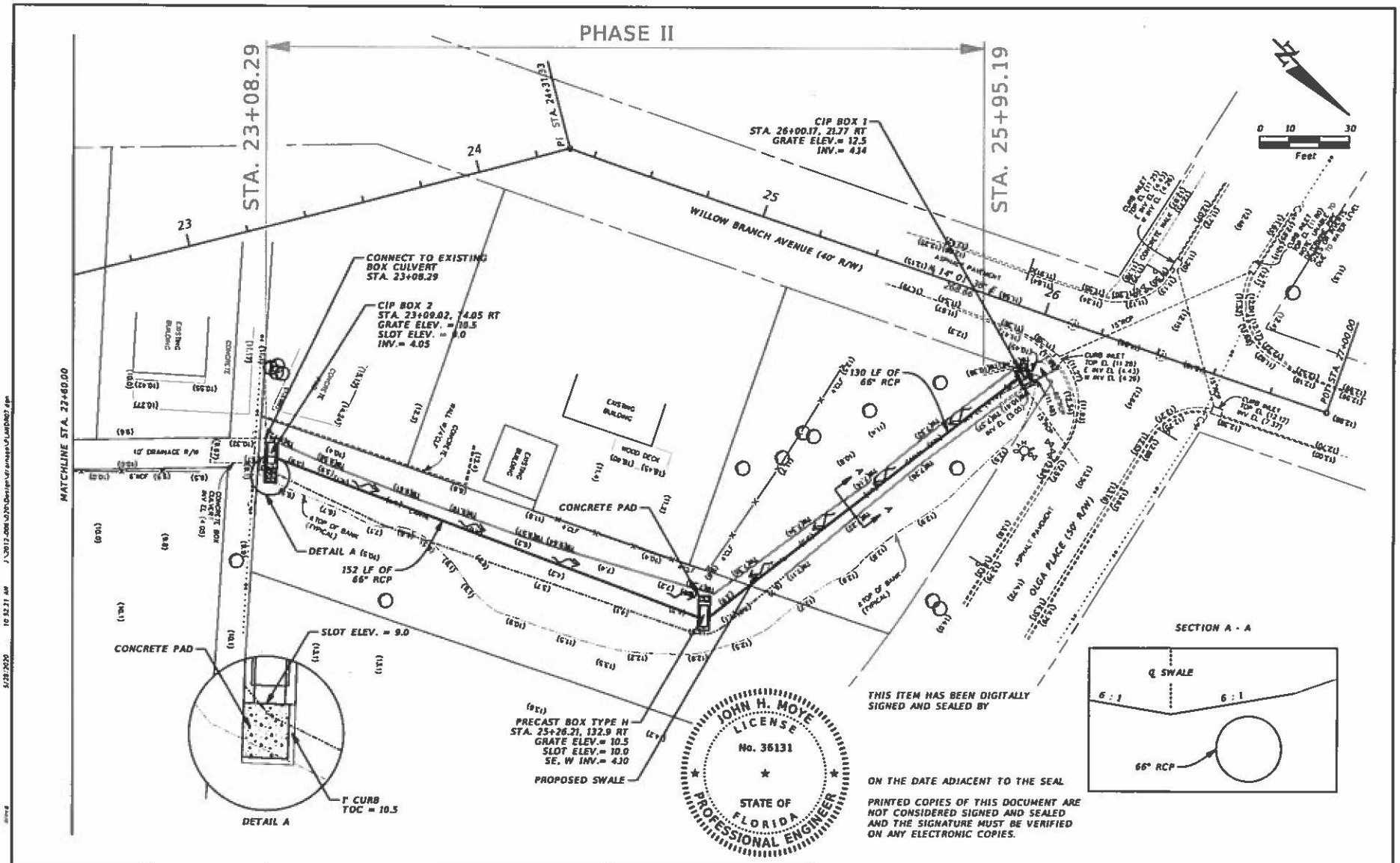

REVISIONS					
DATE	BY	DESCRIPTION	DATE	BY	DESCRIPTION

DESIGN ENGINEER:
John H. Moye PE License No. 36131
WAITZ&MOYE
3730 Southside Blvd. Suite 101
Jacksonville, Florida 32216
C.A. No. 6234 • 904.642.5311

City of Jacksonville
Department of Public Works

PROJECT ID: 2012-006-020
SCALE: 1" = 30'

Willow Branch Canal Rehabilitation
DRAINAGE & EROSION CONTROL PLAN

SHEET NO. 18

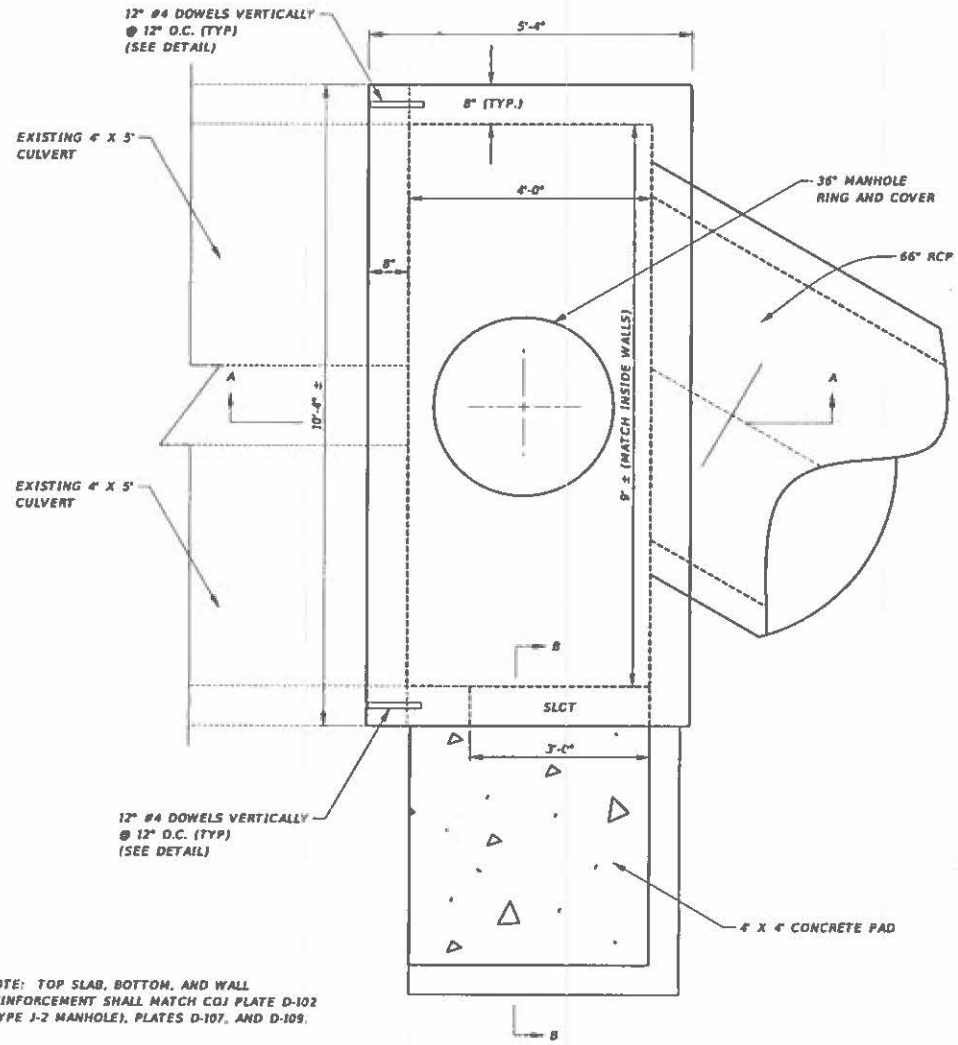

NOTE: TOP SLAB, BOTTOM, AND WALL REINFORCEMENT SHALL MATCH COJ PLATE D-102 (TYPE J-2 MANHOLE), PLATES D-107, AND D-109.

PLAN VIEW

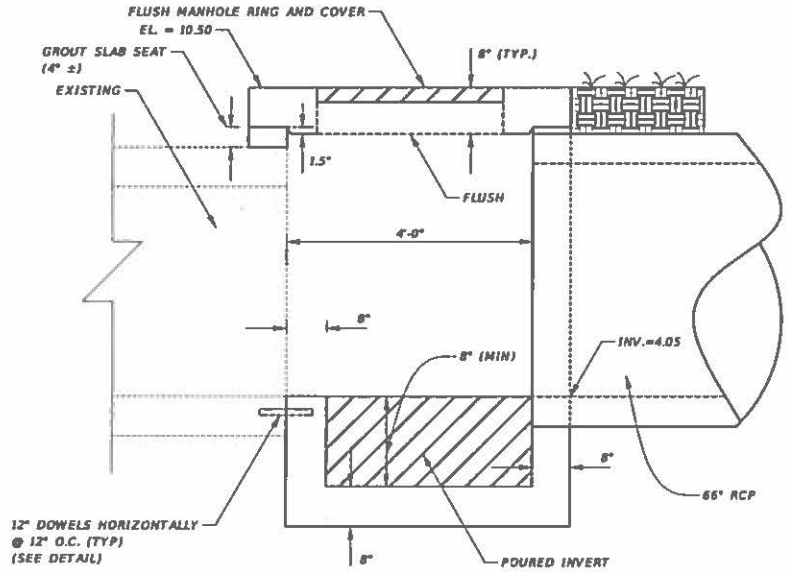

SECTION A-A

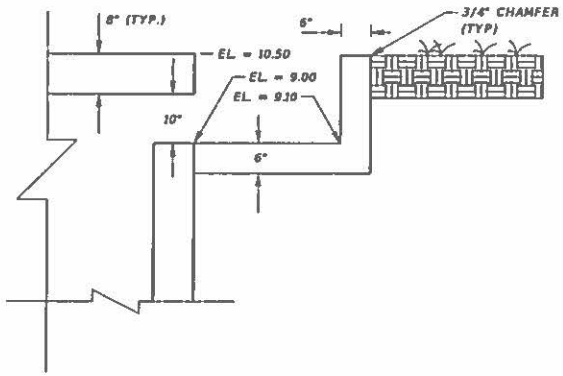

SECTION B-B

CIP BOX # 2

REVISIONS					
DATE	BY	DESCRIPTION	DATE	BY	DESCRIPTION

DESIGN ENGINEER: John H. Moye PE License No. 38131
WAITZ&MOYE 3730 Southside Blvd. Suite 101 Jacksonville, Florida 32216 C.A. No. 6334 • 904.642.8311

City of Jacksonville
Department of Public Works

PROJECT ID: 2012-006-020
SCALE: N.T.S.

Willow Branch Canal Rehabilitation
CONSTRUCTION & DRAINAGE DETAILS

SHEET NO. 33

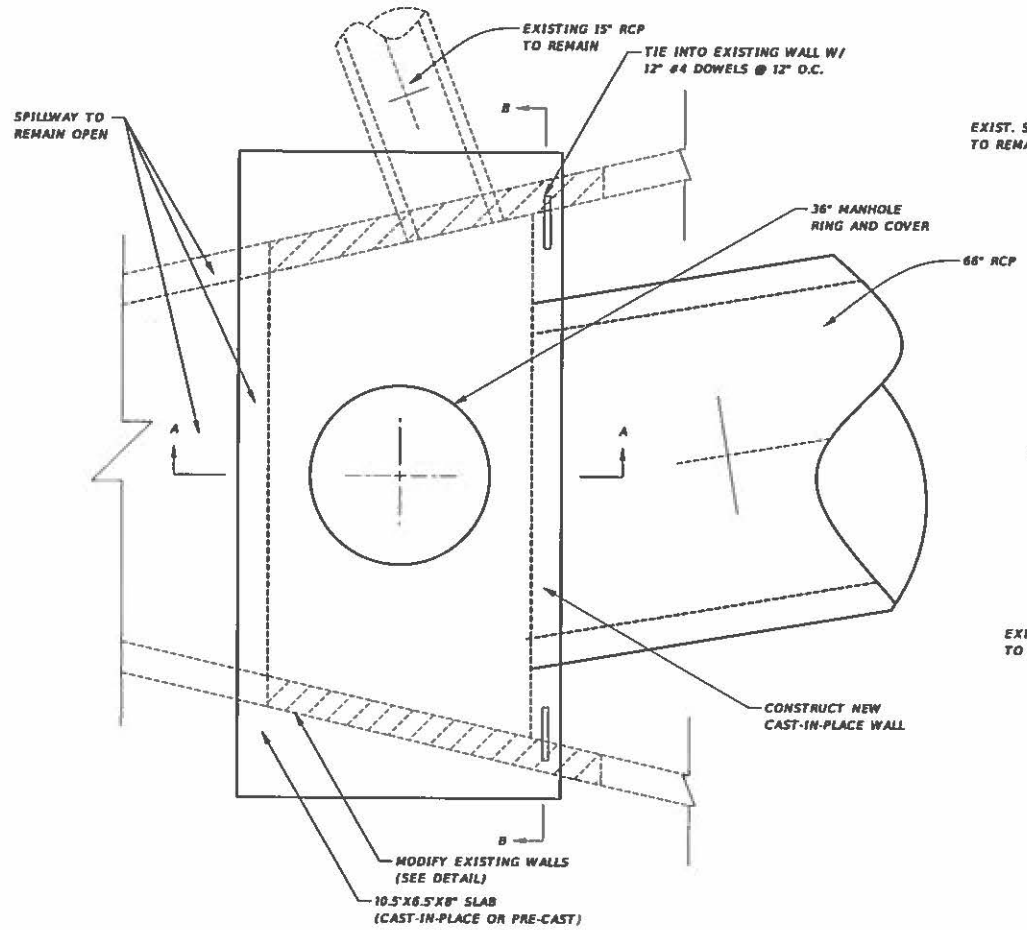

PLAN VIEW

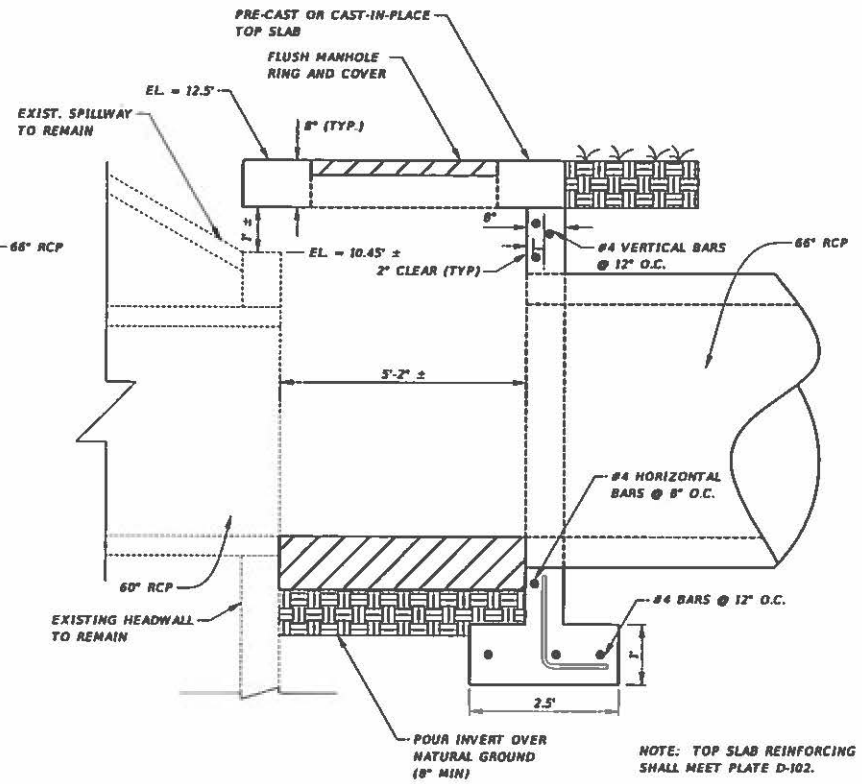

NOTE: TOP SLAB REINFORCING SHALL MEET PLATE D-102.

SECTION A-A

CIP BOX # 1

REVISIONS					
DATE	BY	DESCRIPTION	DATE	BY	DESCRIPTION

DESIGN ENGINEER:
John H. Moye PE License No. 38131
WAITZ&MOYE
2730 Southside Blvd. Suite 101
Jacksonville, Florida 32216
C.A. No. 6734 • 904.642.5311

City of Jacksonville
Department of Public Works

PROJECT ID: 2012-006-020
SCALE: N.T.S.

Willow Branch Canal Rehabilitation
CONSTRUCTION & DRAINAGE DETAILS

SHEET NO. 34

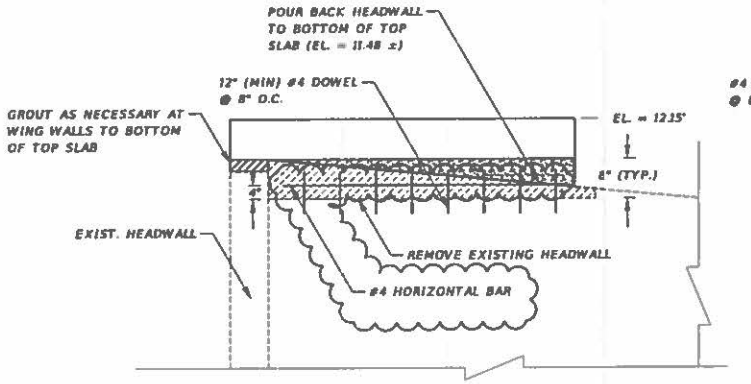

WING WALL MODIFICATION DETAIL
(TYPICAL OF BOTH WALLS)
CIP BOX # 1

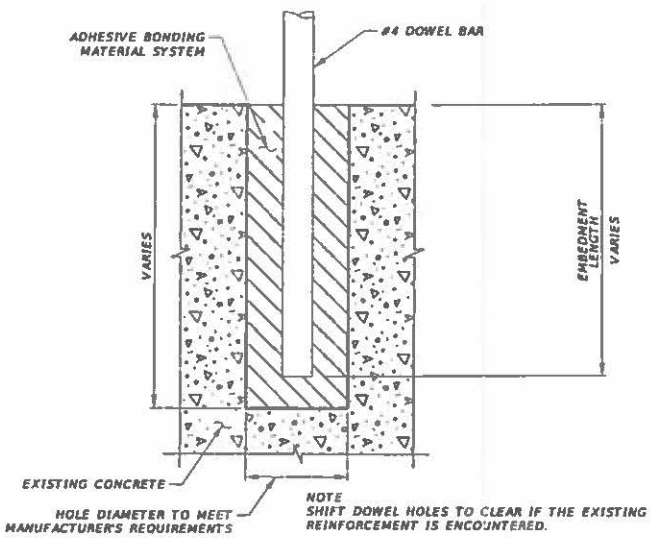

DOWEL DETAIL

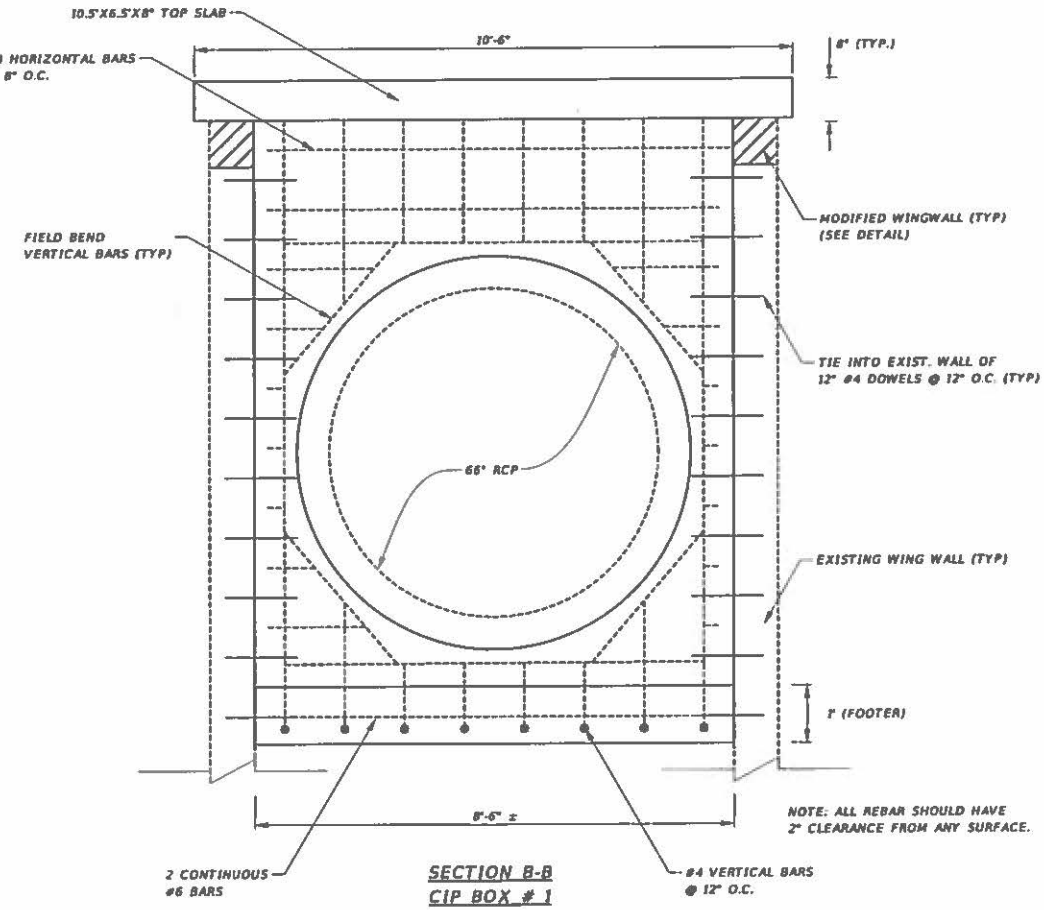

SECTION B-B
CIP BOX # 1

REVISIONS					
DATE	BY	DESCRIPTION	DATE	BY	DESCRIPTION

DESIGN ENGINEER:
John H. Moye PE License No. 38131
WAITZ&MOYE
3720 Southside Blvd. Suite 101
Jacksonville, Florida 32216
C.A. No. 5234 • 904.842.6111

City of Jacksonville
Department of Public Works

PROJECT ID: 2012-006-020
SCALE: N.T.S.

Willow Branch Canal Rehabilitation
CONSTRUCTION & DRAINAGE DETAILS

SHEET NO. 35

SUBJECT: WILLOW BRANCH (PHASE II) CANAL REHABILITATION-REBID

BID #: CP-0636-19 **OPEN DATE:** 2019-10-09

GENERAL GOVERNMENT AWARDS COMMITTEE

KIND AND BASIS OF CONTRACT: CONSTRUCTION PARTICIPATION

AGENCY: PUBLIC WORKS

BASIS OF AWARD: TOTAL BASE BID -LOWEST RESPOSIVE, RESPONSIBLE BIDDER

NUMBER OF BIDS INVITED: (5) **NUMBER RECEIVED:** (6) **OTHER** (0)

SUMMARY OF BIDS AND RECOMMENDED ACTIONS:
Recommend approval of award to the lowest responsive, responsible bidder Maer Homes, LLC dba Maer Construction in the total base bid amount not-to-exceed $831,115.22.

This award is to be funded by account(s): RPCP32EF5720-06505-PW0835-01 to be executed by formal contract through Office of General Counsel.

Attachments: Recommendation Memo, Bid Tabulation Sheet, JSEB Letter, Basis of Award, Scope of Work

ANALYST: Marilyn Laidler
MARILYN LAIDLER

RESPECTFULLY SUBMITTED
GREGORY PEASE, CHIEF
PROCUREMENT DIVISION

CONCURRENCE BY: Robin G. Smith, P.E., Chief, Engineering and Construction Management

(ALL AWARD ACTIONS SUBJECT TO LAWFULLY APPROPRIATED FUNDS)
ACTION OF GGAC COMMITTEE ON RECOMMENDATIONS ABOVE

MEMBERS APPROVING 3 MEMBERS DISAPPROVING Ø DATE: 11-14-19

Jerry R Eichner

OTHER:

ACTION OF AWARDING AUTHORITY DATE 11/14/19

APPROVED ✓ BH DISAPPROVED

OTHER

SIGNATURE OF AUTHENTICATION

Brian Hughes
Chief Administrative Officer
For: Mayor Lenny Curry
Under Authority of:
Executive Order No: 2019-02