SUBJECT: **CITYWIDE EMERGENCY DEBRIS MANAGEMENT SERVICES**

BID # **ESC-0135-17** OPEN DATE: **05/17/2017**

COMPETITIVE SEALED PROPOSAL EVALUATION COMMITTEE

KIND AND BASIS OF CONTRACT: **CONSTRUCTION SERVICES- INITIAL TERM EXECUTION OF CONTRACT FOR FOUR (4) YEARS, WITH TWO (2) TWO (2) YEAR RENEWAL OPTIONS**

AGENCY: **DEPARTMENT OF PUBLIC WORKS**

BASIS OF AWARD: **EVALUATION CRITERIA**

NUMBER OF BIDS INVITED: 9 NUMBER RECEIVED: 4 OTHER: 0

SUMMARY OF BIDS AND RECOMMENDED ACTIONS:

Recommend approval to amend the award to J.B. Coxwell Contracting, Inc. to add the following line items: Wood Chipper at $118.00 per hour and All Terrain Man Lift at $175.00 per hour, and to increase award in the amount of $10,000,000.00. Total revised award amount not-to-exceed $45,000,000.00.

Funding Source: To be executed by formal contract change order through the Office of General Counsel and encumbered by purchase order(s) on as-needed basis.

Attachments: Recommendation Memo, Previous Award(s)

BUYER Marilyn Laidler
MARILYN LAIDLER

RESPECTFULLY SUBMITTED
GREGORY PEASE, CHIEF
PROCUREMENT DIVISION

CONCURRENCE BY: **William J. Joyce, P.E., Operations Director/ Dinah Mason- Administration Manager- Public Works Department**

(ALL AWARD ACTIONS SUBJECT TO LAWFULLY APPROPRIATED FUNDS)
ACTION OF CSPEC COMMITTEE ON RECOMMENDATIONS ABOVE

MEMBERS APPROVING_____ MEMBERS DISAPPROVING_____ DATE:_____

_____ _____ OTHER_____

_____ _____

_____ _____

_____ _____

_____ _____

ACTION OF AWARDING AUTHORITY DATE _____

APPROVED_____ DISAPPROVED: _____

OTHER: _____

SIGNATURE OF AUTHENTICATION _____

City of Jacksonville, Florida

Lenny Curry, Mayor
Department of Public Works
Office of the Director
214 N. Hogan Street, 10th Floor
Jacksonville, FL 32202
(904) 255-8786
www.coj.net

ONE CITY. ONE JACKSONVILLE.

DATE: **December 4, 2017**

TO: **Gregory W. Pease, Chief**
Procurement Division

THRU: **John P. Pappas, P. E., Director**

12/07/17 14:16:40
Procurement Division

FROM: for **Dinah Mason, Administration Manager**

William J. Joyce, P. E., Operations Director

SUBJECT: **ESC-0135-17 Citywide Emergency Debris Management Services Award Recommendation Change Order No. 2**

Public Works has determined that there are two line items that were not included on the original contract that need to be added to accommodate emergency debris removal in cemeteries.

Accordingly, the Public Works Department recommends that Contract No. 6533-57 with J. B. Coxwell Contracting, Inc. for Citywide Emergency Debris Management Services be amended to add the following line items: Wood Chipper - $118.00 per hour and All Terrain Man Lift - $175.00 per hour. We also need to increase the maximum indebtedness to $45,000,000.00. Funds will be encumbered by purchase order(s) using the account number set up at the time of the emergency.

JPP:dm

Attachments: Previous Award

Cc: Dinah Mason, Administration Manager
William J. Joyce, P. E., Operations Director

ab

J.B. Coxwell Contracting, Inc.
6741 Lloyd Road West
Jacksonville, Florida 32254
Office (904) 786-1120 Fax (904) 783-2970

Mr. Bill Joyce
City of Jacksonville
214 North Hogan Street, 10th Floor
Jacksonville, Florida 32202

RE: Hurricane Irma Storm Recovery – Proposal for City of Jacksonville Parks, **Wood Chipper**
Additional Explanation of Required Equipment

Dear Mr. Joyce:

As discussed, J.B. Coxwell Contracting, Inc. (JBCCI) provides the following unit price proposal to furnish a wood chipper within the designated City of Jacksonville Parks.

Price based on a VERMEER BC 1000XL or equal and includes haul unit and fuel, lube, maintenance and associated tools (see attached cut sheet for unit details).

Jacksonville Parks have varying conditions in which logs, limbs and brush must be cleared. Under direction of Parks personnel, the Wood Chipper will be used in those areas where it is more expedient for removal and consistent with the use of that section of the park to chip the small logs, limbs and brush in the park environment.

Wood Chipper Hourly Rate = **$118.00/Hr.**

If the above meets your approval, please forward your written concurrence along with any applicable Purchase Order that will need to be referenced when billing. We appreciate the opportunity to earn your business.

Should you have any questions please contact our office to discuss.

Sincerely,
J. B. COXWELL CONTRACTING, INC.

Chuck Chaon
Project Administrator

Ltr. 20

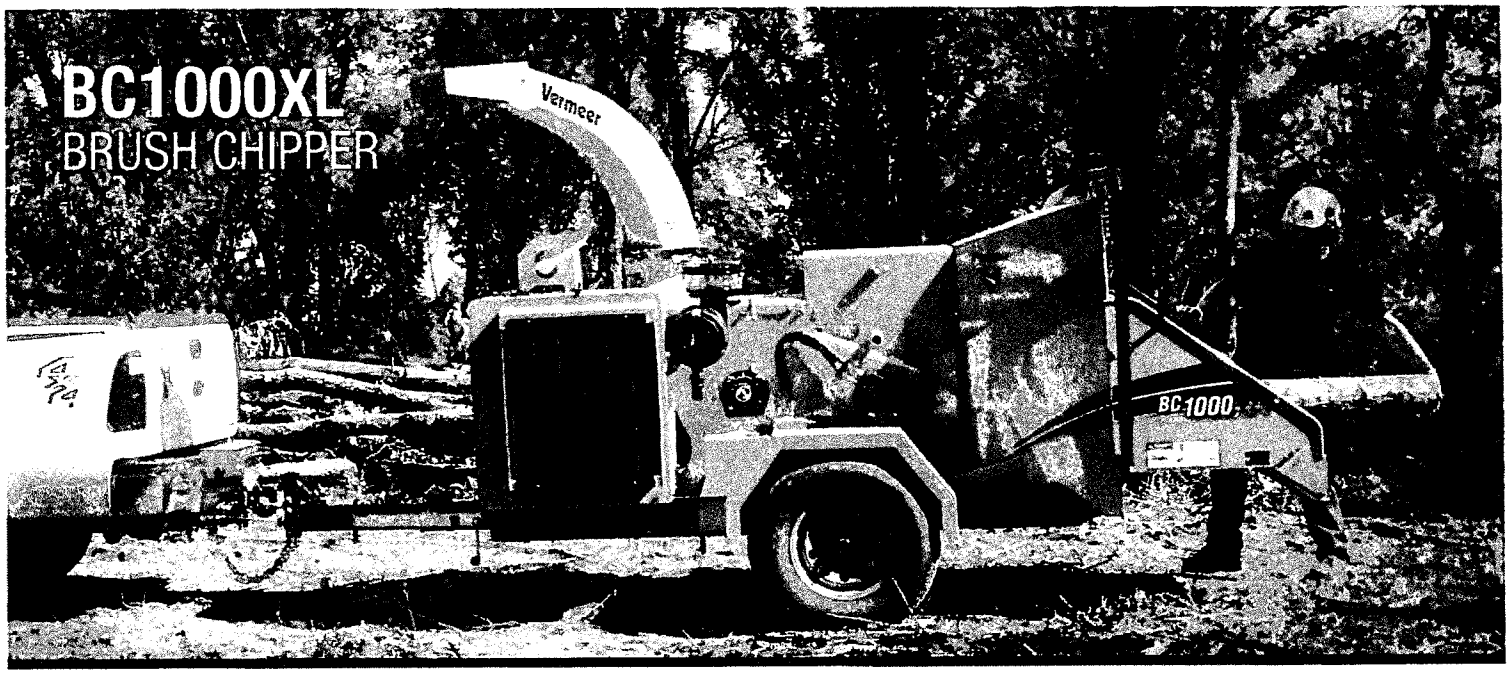

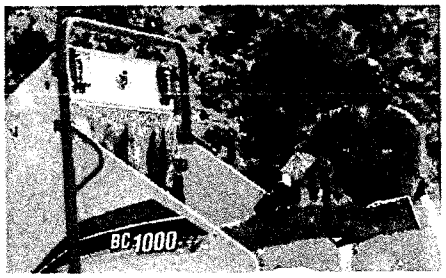

OPERATOR SAFETY. Combined with the patented bottom feed stop bar is the four-position upper feed control bar with dual stop positions and forward/reverse feed positions. Mounted over the feed table, it enables the operator to stop the feed rollers and select forward or reverse operations. Dual reset/hold-to-run buttons allow the operator to readily reset the bottom feed stop bar.

ECOIDLE™

ECOIDLE™ ENGINE CONTROL SYSTEM. The Ecoidle engine control system can help aid in noise reduction, as well as help consumer less fuel if the feeding process has frequent interruptions.

SMARTFEED. The patented SmartFeed system helps increase operator productivity while reducing strain on vital engine parts.
The feedsensing control system monitors engine rpm and automatically stops and reverses the feed roller when feeding larger, hardwood material.

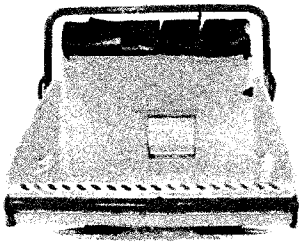

LARGE FEED OPENING. A large rectangular 12" x 17" (30.5 cm x 43.2 cm) feed opening helps boost productivity by reducing the need to trim material before feeding it into the chipper.

3 YEAR/
3000 HOUR
WARRANTY

EXTENDED WARRANTY. The 3-year/3000-hour extended limited warranty on drum housing, cutter drum, shaft and hubs offers peace of mind, in addition to the 1-year/1000-hour Vermeer equipment limited warranty.

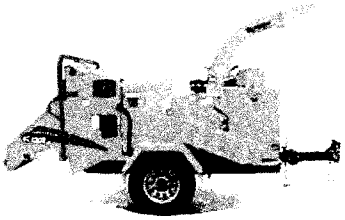

CLUTCHLESS PTO. The throttle integrated with the belt drive engagement process helps ensure that the PTO can only be engaged while the engine is at low idle/low rpm. Automatically, the engine throttles up to full rpm after the belt drive is fully engaged. This system helps to reduce premature wear to the belt drive system by preventing high idle engagement of the cutter drum.

Vermeer

EQUIPPED TO
DO MORE.

VERMEER.COM

BC1000XL BRUSH CHIPPER

GENERAL

Length: 150" (381 cm)
Width: 66.5" (168.9 cm)
Height: 101" (256.5 cm)
Weight: 4995 lb (2265.7 kg)

ENGINE OPTION ONE

Make and model: Deutz D2.9L Tier 4 Final
Horsepower: 49 hp (36.5 kW)
Max torque: 108 ft-lb (146.2 Nm)
Fuel type: Diesel
Number of cylinders: 4
Cooling medium: Liquid

ENGINE OPTION TWO

Make and model: Deutz TD2.9L Tier 4 Final
Horsepower: 74 hp (55 kW)
Max torque: 181 ft-lb (245.4 Nm)
Fuel type: Diesel
Number of cylinders: 4
Cooling medium: Liquid

FEED SYSTEM

Chipping capacity (max): 12" (30.5 cm)
Infeed opening height: 12" (30.5 cm)
Infeed opening width: 17.5" (44.5 cm)
Feed roller orientation: Single horizontal
Feed table height: 26" (66 cm)
Feed speed (max): 122 fpm (37.2 m/min)
Feed roller dimensions: 20" x 17" (50.8 cm x 43.2 cm)

CUTTING SYSTEM

Drum dimensions: 22" diameter x 20" wide (55.9 cm x 50.8 cm)
Drum speed: 2126 rpm
Knives: Two A8 chipper steel reversible
Shear bar: Four usable edges
Engagement system: Clutchless belt drive PTO

CAPACITIES/ELECTRICAL

Fuel tank: 25 gal (94.6 L)
Hydraulic tank: 7 gal (26.5 L)
Hydraulic flow (max): 2.85 gpm (10.8 L/min)
Electrical: 12 Volt
Lights: LED stop, turn, tail, license

CHASIS/BRAKES

Frame: .25" x 7" (63.5 cm x 17.8 cm) Z channel
Tires: ST235/80/R16 load range E
Axle/Suspension: 5200 lb (2359 kg)/Torsion
Optional axle/suspension: 7000 lb (3175.1 kg)/Torsion
Electric brakes with breakaway switch

OPTIONS

Extended warranty
Special paint
Planned maintenance
Vermeer Confidence Plus® Asset Protection Program
Hydraulic surge brakes
Tree Comander™ remote control

NOTES:

J.B. Coxwell Contracting, Inc.
6741 Lloyd Road West
Jacksonville, Florida 32254
Office (904) 786-1120 Fax (904) 783-2970

Mr. Bill Joyce
City of Jacksonville
214 North Hogan Street, 10th Floor
Jacksonville, Florida 32202

RE: Hurricane Irma Storm Recovery - Proposal for City of Jacksonville Parks, **All Terrain Man Lift**
Additional Explanation of Required Equipment

Dear Mr. Joyce:

As discussed, J.B. Coxwell Contracting, Inc. (JBCCI) provides the following unit price proposal to furnish a low ground pressure or 4 wheel drive all-terrain man lift to trim leaners and hangers within the designated City of Jacksonville Parks.

Price based on a ALTEC AT37GW or equal and includes operator/climber; haul unit and fuel, lube, maintenance and associated tools (see attached cut sheet for unit details).

Jacksonville Parks have varying slopes, soil densities and moisture content. Slopes, loose and wet soil conditions create conditions where heavy, bucket trucks will do additional damage to the parks, likely to get stuck and in many cases will not be able to reach hazardous hangers or leaners that are in the public space. Additionally, low ground pressure equipment will reduce or eliminate the risk to broken curbs, sidewalks and underground installations that heavy, bucket trucks are at risk of damaging. The characteristics of the all terrain man lift of low ground pressure, ease of movement, stability in operation and extended reach are all necessary attributes of the equipment and operator to reach dangerous leaners and hangers in the Jacksonville Parks.

All Terrain Man Lift Hourly Rate = **$175.00/Hr.**

If the above meets your approval, please forward your written concurrence along with any applicable Purchase Order that will need to be referenced when billing. We appreciate the opportunity to earn your business.

Should you have any questions please contact our office to discuss.

Sincerely,
J. B. COXWELL CONTRACTING, INC.

Chuck Chaon
Project Administrator

Ltr. 19

Altec

Back to Telescopic Articulating

SHARE

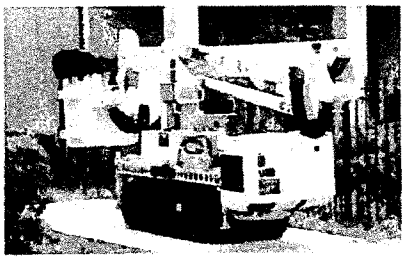

AT37GW

Articulating Telescopic Aerial Device

Altec's AT37GW is an insulating track-driven carrier aerial device, featuring a 35.3 ft platform height.

SPECIFICATIONS PHOTOS

General Specifications:

Ground to Bottom of Platform*	35.3 ft
Maximum Side Reach	28.4 ft
Boom Articulation (Lower Boom)	-25 to 75°
Download Spec Sheet	

Standard Features:

Features

- Altec ISO-Grip® Control System
- Outrigger controls with motion alarms
- Outrigger boom interlock system
- Hydraulic tool outlet at platform
- Insulating per ANSI "46kV and Below" dielectric rating
- Painted white with Altec powder coat paint process
- Track-driven carrier with retractable tracks to 34 in
- Handheld pendant ground drive controls
- Drive/outrigger and aerial device selector switch
- Continuous rotation
- 180 deg platform rotator
- Platform leveling control at lower controls
- 1000 lb (453.6 kg) cargo deck capacity
- 6 gal (22.7 l) fuel tank

Optional Features:

Options

- Trailer
- Platform cover

Recommended Features:

Features

- Fall protection system
- Platform liner
- Wheel chocks
- Outrigger pads

New Altec Units For Sale

Interested In a New Altec Unit?

View our available new, demo and used equipment here.

Altec Chippers

Did you know Altec makes chippers?

Learn More.

Altec Supply

Learn more about our Truck Kits & Grounding Assemblies!

Safety Training

We offer a variety of Operator Training programs.

Learn More.

*Based on chassis frame height of 40 inches (1016 mm)

Altec Aerial Devices meet or exceed all applicable ANSI Standards as of the date of manufacture. Altec reserves the right to improve models and change specifications without notice or obligation

OUR COMPANY

QUICK LINKS

POPULAR PRODUCTS

INTERNATIONAL SALES

Need Help? Please contact us at 1-877-GO ALTEC option 1.

Connect with us

SD50 4x4

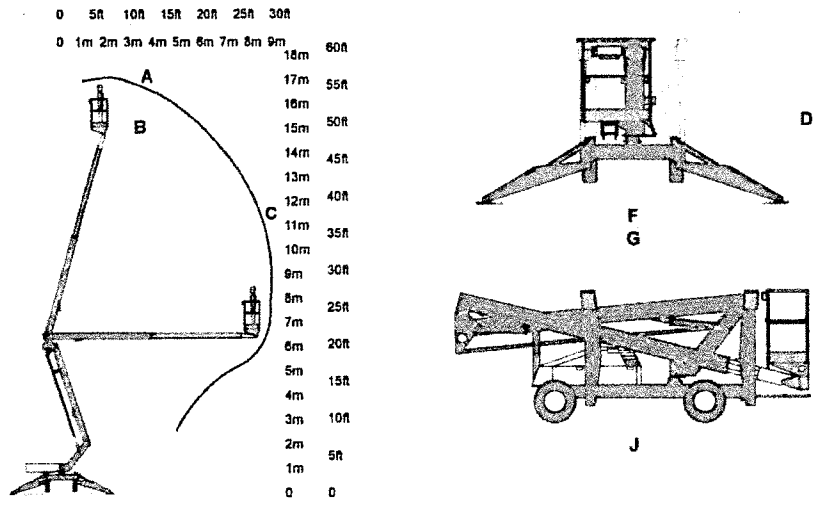

(A) 17.1m 56ft

(B) 15.1m 49ft 6in

(C) 8.7m 28ft 6in

225kg 500lbs

1.1m x 0.65m 3ft 7in x 2ft 2in

Option

(D) 2.1m 6ft 11in

(F) 1.6m 5ft 3in

(G) 4.4m 14ft 5in

(J) 5.6m 18ft 4in

8.3km/h 5.2mph

5.2m 17ft

30% 17°

2750kg 6000lbs

niftylift
1525 S. Buncombe Road,
Greer, SC - 29651
United States
1-800-643-8954
usasales@niftylift.com
www.niftylift.com

ISO 9001 Registered

ISO 14001 Registered

IS-102

SUBJECT: **CITYWIDE DEBRIS MANAGEMENT SERVICES**

BID # **ESC-0135-17** OPEN DATE: **05/17/2017**

COMPETITIVE SEALED PROPOSAL EVALUATION COMMITTEE

KIND AND BASIS OF CONTRACT: **CONSTRUCTION SERVICES- INITIAL TERM EXECUTION OF CONTRACT FOR FOUR (4) YEARS, WITH TWO (2) TWO (2) YEAR RENEWAL OPTIONS**

AGENCY: **DEPARTMENT OF PUBLIC WORKS**

BASIS OF AWARD: **EVALUATION CRITERIA**

NUMBER OF BIDS INVITED: 9 NUMBER RECEIVED: 4 OTHER: 0

SUMMARY OF BIDS AND RECOMMENDED ACTIONS:

Recommend approval to increase award to J.B. Coxwell Contracting, Inc.(contract #6533-57), in the amount of $12,890,930.00, for a revised total award amount not-to-exceed $35,000,000.00.

Funding Source: To be executed by formal contract change order through the Office of General Counsel and encumbered by purchase order(s) on as-needed basis.

Attachments: Recommendation Memo, Previous Award(s)

BUYER Marilyn Laidler
MARILYN LAIDLER

RESPECTFULLY SUBMITTED _____
GREGORY PEASE, CHIEF
PROCUREMENT DIVISION

CONCURRENCE BY: **William J. Joyce, P.E., Operations Director/ Dinah Mason- Administration Manager- Public Works Department**

(ALL AWARD ACTIONS SUBJECT TO LAWFULLY APPROPRIATED FUNDS)

ACTION OF CSPEC COMMITTEE ON RECOMMENDATIONS ABOVE

MEMBERS APPROVING 5 MEMBERS DISAPPROVING Ø DATE: 10/26/17

OTHER _____

Teresa R. Eubanks

ACTION OF AWARDING AUTHORITY DATE 10/26/17

APPROVED _____ DISAPPROVED: _____

OTHER: _____

SIGNATURE OF AUTHENTICATION _____

Sam E. Mousa
Chief Administrative Officer
For: Mayor Lenny Curry
Under Authority of:
Executive Order No. 2015-05

SUBJECT: **CITYWIDE DEBRIS MANAGEMENT SERVICES**

BID # **ESC-0135-17** OPEN DATE: **05/17/2017**

COMPETITIVE SEALED PROPOSAL EVALUATION COMMITTEE

KIND AND BASIS OF CONTRACT: **CONSTRUCTION SERVICES- INITIAL TERM EXECUTION OF CONTRACT FOR FOUR (4) YEARS, WITH TWO (2) TWO (2) YEAR RENEWAL OPTIONS**

AGENCY: **DEPARTMENT OF PUBLIC WORKS**

BASIS OF AWARD: **EVALUATION CRITERIA**

NUMBER OF BIDS INVITED: 9 NUMBER RECEIVED: 4 OTHER: 0

SUMMARY OF BIDS AND RECOMMENDED ACTIONS:

Recommend approval to amend the award to J.B. Coxwell Contracting, Inc. to add the following unit cost items listed below:

1. Remove Hanger(s), Leave Debris Curbside in Right-of-Way.....Unit Cost .....$ 108 .00 EA
2. Process 250,000 CY of C&D..... Unit Cost.....$ 5.29 CY
3. Load, Haul and Dispose of TDS material (C&D) to An Approved Permanent Disposal Site (0-30 Miles).....Unit Cost .....$ 10.49 CY
4. Load, Haul and Dispose of TDS material (C&D) to An Approved Permanent Disposal Site (31-60 Miles).....Unit Cost.....$ 12.85 CY
5. Load, Haul and Dispose of TDS material (C&D) to An Approved Permanent Disposal Site (61 Miles or Greater)...Unit Cost.....$ 16.25 CY

Please see agency's memo for additional clarification and changes needed.

Funding Source: To be executed by formal contract change order through the Office of General Counsel and encumbered by purchase order(s) on as-needed basis.

Attachments: Recommendation Memo, Previous Award(s)

BUYER Marilyn Ludler
MARILYN LADLER

RESPECTFULLY SUBMITTED
GREGORY PEASE, CHIEF
PROCUREMENT DIVISION

CONCURRENCE BY: **William J. Joyce, P.E., Operations Director/ Dinah Mason- Administration Manager- Public Works Department**

(ALL AWARD ACTIONS SUBJECT TO LAWFULLY APPROPRIATED FUNDS)

ACTION OF CSPEC COMMITTEE ON RECOMMENDATIONS ABOVE

MEMBERS APPROVING 5 MEMBERS DISAPPROVING Ø DATE: 10/05/17

OTHER

Teresa R. Eichner

ACTION OF AWARDING AUTHORITY DATE 10/05/17

APPROVED DISAPPROVED:

OTHER:

SIGNATURE OF AUTHENTICATION

Sam E. Mousa
Chief Administrative Officer
For Mayor Lenny Curry
Under Authority of
Executive Order No. 2015-05

SUBJECT: **CITYWIDE DEBRIS MANAGEMENT SERVICES**

BID # **ESC-0135-17** OPEN DATE: **05/17/2017**

COMPETITIVE SEALED PROPOSAL EVALUATION COMMITTEE

KIND AND BASIS OF CONTRACT: **CONSTRUCTION SERVICES- INITIAL TERM EXECUTION OF CONTRACT FOR FOUR (4) YEARS, WITH TWO (2) TWO (2) YEAR RENEWAL OPTIONS**

AGENCY: **DEPARTMENT OF PUBLIC WORKS**

BASIS OF AWARD: **EVALUATION CRITERIA**

NUMBER OF BIDS INVITED: 9 NUMBER RECEIVED: 4 OTHER: 0

SUMMARY OF BIDS AND RECOMMENDED ACTIONS:

Recommend approval to amend the award to J.B. Coxwell Contracting, Inc. to include the maximum indebtedness for the initial four (4) year period effective from date of executed contract. Total expenditure not to exceed $22,109,070.00.

Funding Source: Various Accounts – To be executed by formal contract through the Office of General Counsel and encumbered by purchase order(s) on as-needed basis.

Attachments: Recommendation Memo, Scoring Matrix, Bid Tabulation Sheet, Evaluation Matrix

BUYER _____ for MARILYN LAIDLER

RESPECTFULLY SUBMITTED _____ GREGORY PEASE, CHIEF PROCUREMENT DIVISION

CONCURRENCE BY: **William J. Joyce, P.E., Operations Director/ Dinah Mason- Administration Manager- Public Works Department**

(ALL AWARD ACTIONS SUBJECT TO LAWFULLY APPROPRIATED FUNDS)

ACTION OF CSPEC COMMITTEE ON RECOMMENDATIONS ABOVE

MEMBERS APPROVING 5 MEMBERS DISAPPROVING Ø DATE: 7/14/17

OTHER _____

ACTION OF AWARDING AUTHORITY DATE 7/15/17

APPROVED _____ DISAPPROVED: _____

OTHER: _____

SIGNATURE OF AUTHENTICATION _____

Sam E. Mousa
Chief Administrative Officer
For Mayor Lenny Curry
Under Authority of
Executive Order No. 2015-05

SUBJECT: CITYWIDE DEBRIS MANAGEMENT SERVICES

BID # ESC-0135-17 OPEN DATE: 05/17/2017

COMPETITIVE SEALED PROPOSAL EVALUATION COMMITTEE

KIND AND BASIS OF CONTRACT:
CONSTRUCTION SERVICES- INITIAL TERM EXECUTION OF CONTRACT FOR FOUR (4) YEARS, WITH TWO (2) TWO (2) YEAR RENEWAL OPTIONS

AGENCY: **DEPARTMENT OF PUBLIC WORKS**

BASIS OF AWARD: **EVALUATION CRITERIA**

NUMBER OF BIDS INVITED: 9 NUMBER RECEIVED: 4 OTHER: 0

SUMMARY OF BIDS AND RECOMMENDED ACTIONS:
The City received four (4) proposals for evaluation for subject project and found all four (4) to be responsive, interested, qualified and available to provide the services required by the RFP. The proposals were evaluated using the criteria outlined in the competitive sealed proposals for the subject RFP. The ranking of the four (4) proposals and scores (Listed below):

1) J.B. Coxwell Contracting, Inc. – 107.50
2) D & J Enterprises, Inc. – 105.00
3) Ceres Environmental Services, Inc. – 91
4) DRC Emergency Services- 90

Recommend approval of award to J.B. Coxwell Contracting, Inc., as receiving the highest score in accordance with the evaluation and ranking above. Period of Service will be four (4) years from execution date of contract with two (2) two (2) year renewal options. To be executed by formal contract through Office of General Counsel, no funds will be encumbered at this time and will be processed by individual Purchase Orders using the account number set up at time of the emergency.

Attachments: Recommendation Memo, Scoring Matrix, Bid Tabulation Sheet, Evaluation Matrix

BUYER Marilyn Laidler
MARILYN LAIDLER

RESPECTFULLY SUBMITTED
GREGORY PEASE, CHIEF
PROCUREMENT DIVISION

CONCURRENCE BY: **William J. Joyce, P.E., Operations Director/ Dinah Mason- Administration Manager- Public Works Department**

(ALL AWARD ACTIONS SUBJECT TO LAWFULLY APPROPRIATED FUNDS)
ACTION OF CSPEC COMMITTEE ON RECOMMENDATIONS ABOVE

MEMBERS APPROVING 5 MEMBERS DISAPPROVING Ø DATE: 6/27/2017

OTHER

ACTION OF AWARDING AUTHORITY DATE 6/28/17

APPROVED DISAPPROVED:

Sam E. Mousa
Chief Administrative Officer
For: Mayor Lenny Curry
Under Authority of:
Executive Order No. 2015-05

OTHER:

SIGNATURE OF AUTHENTICATION