SUBJECT: Piggyback Manatee County School District Contract No. 21-0053-MR Bid on Park & Playground Equipment – Barney Browning Playground

BID #: PSC-0323-22 **OPEN DATE: 07/22/2020**

GENERAL GOVERNMENT AWARDS COMMITTEE

KIND AND BASIS OF CONTRACT: PIGGYBACK CONTRACT – TERM OF AGREEMENT SHALL BE FROM SEPTEMBER 1, 2020 THROUGH AUGUST 31, 2023, WITH ONE (1) YEAR RENEWAL OPTION

AGENCY: PARKS, RECREATION AND COMMUNITY SERVICES DEPARTMENT

BASIS OF AWARD: Piggyback Manatee County School District Contract No. 21-0053-MR Bid on Park & Playground Equipment – Barney Browning Playground

NUMBER OF BIDS INVITED: ( ) NUMBER RECEIVED: ( ) OTHER ( )

SUMMARY OF BIDS AND RECOMMENDED ACTIONS:
Recommend approval to Piggyback Manatee County School District Contract No. 21-0053-MR Bid on Park & Playground Equipment with PLAYMORE WEST, INC. for the playground equipment at Barney Browning Playground. This is a one-time purchase. The total requested expenditure not-to-exceed $99,958.71.

Funding Source: 11101.174103.583052.010291.00000000.00000.0000000. To be executed by formal contract through the Office of General Counsel and processed by purchase order.

ATTACHMENTS: Recommendation Memo; Risk Approval; Vendor Quote; Contract

ANALYST: _____ **RESPECTFULLY SUBMITTED** _____
RUBEN OLA
GREGORY PEASE, CHIEF
PROCUREMENT DIVISION

CONCURRENCE BY: Daryl Joseph, Director of Parks, Recreation and Community Services Department

---

(ALL AWARD ACTIONS SUBJECT TO LAWFULLY APPROPRIATED FUNDS)
ACTION OF GGAC COMMITTEE ON RECOMMENDATIONS ABOVE
MEMBERS APPROVING _____ MEMBERS DISAPPROVING _____ DATE: _____

_____ _____ OTHER: _____

_____ _____

_____ _____

ACTION OF AWARDING AUTHORITY DATE _____

APPROVED _____ DISAPPROVED _____

OTHER _____

SIGNATURE OF AUTHENTICATION _____

City of Jacksonville, Florida

Daryl Joseph, Director

Parks, Recreation and Community Services Department
214 N Hogan Street, 4th Floor
Jacksonville, FL 32202
(904) 255-7903
www.coj.net

ONE CITY. ONE JACKSONVILLE.

January 24,2021

MEMORANDUM

TO: Gregory Pease, Chief
Procurement Division

FROM: Daryl Joseph, Director

RE: **Request to Piggyback Manatee County School District Agreement 21-0053-MR for Various Equipment and Amenities for Parks and Playgrounds-Barney Browning Playground**

The Manatee County School District Agreement with Playmore West, Inc. for various equipment and amenities for parks and playgrounds was competitively bid and awarded for the initial term of three years from September 1, 2020 through August 31, 2023.

The Parks, Recreation and Community Services Department respectfully request approval to piggyback service under the Manatee County School District Agreement 21-0053-MR with Playmore West, Inc.

The Parks, Recreation and Community Services Department have reviewed for compliance the reference project. We respectfully request to recommend awarding to Playmore West, Inc for playground equipment at Barney Browning Playground.

Total funding for this project will be:

11101.174103.583052.010291.00000000.00000.0000000 $99,958.71

If you have any questions or if further information is required, please contact Amy Honey 255-7909.

DJ/ah

Attachment: Manatee County School District Agreement 21-0053-MR
Barney Browning Playground

Parks, Recreation & Community Services
Job Scope / Specifications

	Admin Award Request		Informal Quote Request ITQ
	Agreement Amendment Request		New Low Bid Request ITB
	CIP Construction Services		Request for Proposal RFP
	Contract Purchase Agreement	X	Piggyback Request
	Direct Material Purchase		Single Source
	Emergency Request	X	Federal Funded [i.e. CDBG]
	Close a PO/BO		Change Order on PO listed

PO:

Date: 1/11/22

Recommended Vendor: Playmore -

Address:

City/State/Zip:

Quote Attached |Yes| |No|

POETA	Project#	Task#	Expenditure Type	Expenditure Organization	Contract#	Funding Source	
	010291	1	583052	NBCD	11101-331509-PDC00122	Housing Services - Housing	
1Cloud Funding	Fund	Center	Account	Project	Activity	Interfund	Future
	11101	174103	583052	010291	00000000	00000	0000000

Description of Item / Or Invoice #	QTY	UNIT	UNIT $	AMOUNT
Project is located at: Barney Browning Park (6014 Norwood Avenue, 32208)			$ -	$ -
Contractor to provide material / labor to: Labor, materials and installation of playground equipment.				
Playworld equipment: UC-2000	1	ea	$28,646.00	$ 28,646.00
Spinami - ZZX0151	1	ea	$ 6,013.00	$ 6,013.00
Unity Rocker - ZZX0193	1	cy	$ 7,448.00	$ 7,448.00
Unity Swing Frame - ZZX0198	1	cy	$ 6,984.00	$ 6,984.00
Basket Swing - ZZXX0204	1	ea	$ 1,996.00	$ 1,996.00
Concerto Small Cabasa - ZZXX0660	1	ea	$ 1,026.00	$ 1,026.00
Concerto 2 Congas - ZZXX0663	1	ea	$ 1,880.00	$ 1,880.00
Concerto Vibes - ZZXX0666	1	ea	$ 5,172.00	$ 5,172.00
Engineered Wood Fiber (EWF), per CY	148	cy	$ 27.35	$ 4,047.80

GeoTex Duraliner	2	ea	$ 160.00	$ 320.00
Playworld Freight	1	ea	$ 4,750.00	$ 4,750.00
EWF Freight	1	ea	$ 1,188.00	$ 1,188.00
Installation - Playworld equipment per Manatee Contract	1	ea	$17,986.16	$ 17,986.16
Installation of EWF	1	ea	$ 2,960.00	$ 2,960.00
Removal of existing equipment/excavation	1	ea	$ 291.75	$ 291.75
Dumpster	2	ea	$ 1,500.00	$ 3,000.00
Engineered sealed drawings	1	ea	$ 1,250.00	$ 1,250.00
Building permit expenses and expediting fees	1	ea	$ 5,000.00	$ 5,000.00

Note: Please submit any questions regarding the scope of work 2 days prior to the close of bid to allow for response to questions. Contractor will be responsible for all site clean-up and removal of all debris everyday while installation/work is being completed. Contractor will not be allowed to store any materials/supplies or equipment on site during this project completion. Contractor is responsible for all broken walkways, irrigation, water or electrical lines that they may damage during the installation of the project. Any spoil piles shall not be left on site. Project completion shall be verified by the project manager prior to payment. All projects and work shall be compliant with local building codes and with the Americans with Disabilities Act compliance regulations. This project shall be completed within 30 days after receiving the official PO notification from the City of Jacksonville. All projects will be reviewed by COJ Project Manager(s) to ensure adherence to scope. All measurements shall be field verified by the Contractor before bidding on the project.

Contact: Ronique Gibson upon receipt of purchase order (904) 255-7923				
Total Amount of Order				$ 99,958.71
Ship to: N/A				

Requested By: Ronique Gibson

Requested For: Jill Enz

Approved: Daryl T. Joseph, Director

Date: 1-12-22

PLAYMORE

Recreational Products & Services

10271 Deer Run Farms Road, Suite 1
Fort Myers, FL 33966
(239) 791-2400 (239) 791-2401 fax
(888) 886-3757 toll free
www.playmoreonline.com

QUOTATION

12/15/21

Job Number: 16692

Phase: Opt 5 Rev A

Revision:

Client: City of Jacksonville
117 West Duval St.
Jacksonville FL 32202

Job: Barney Browning Park
6014 Norwood Avenue
Jacksonville FL 32208

Contact: Ronique Gibson **Phone:** 904-255-7923 **Fax:** **Email:** rgibson@coj.net

Sales Rep: James Peacock **Terms:** 50% Equipment Deposit/Net 30

Item	Description	Quantity	Cost	Subtotal
1 Equipment				
UC-2000	UC-2000	1	$28,646.00	$28,646.00
ZZXX0151	SPINAMI	1	$6,013.00	$6,013.00
ZZXX0193	UNITY ROCKR	1	$7,448.00	$7,448.00
ZZXX0198	UNITY SWING FRAME	1	$6,984.00	$6,984.00
ZZXX0204	BASKET SWING	1	$1,996.00	$1,996.00
ZZXX0660	CONCERTO SMALL CABASA	1	$1,026.00	$1,026.00
ZZXX0663	CONCERTO 2 CONGAS	1	$1,880.00	$1,880.00
ZZXX0666	CONCERTO VIBES	1	$5,172.00	$5,172.00
Discount	School District of Manatee County 21-0053-MR	-1	$2,958.25	-$2,958.25
Discount	Courtesy Discount	-1	$7,000.00	-$7,000.00
EWF	Engineered Wood Fiber, priced per CY	148	$27.35	$4,047.80
EWF	GeoTex Duraliner	2	$160.00	$320.00
		Subtotal:		**$53,574.55**
2 Freight				
Freight	Playworld Freight	1	$4,750.00	$4,750.00
Freight	EWF Freight	1	$1,188.00	$1,188.00
		Subtotal:		**$5,938.00**
3 Installation				
PSI Installation	Installation of Playworld Equipment per Manatee Contract	1	$17,986.16	$17,986.16
Installation	Installation of EWF	1	$2,960.00	$2,960.00
Removal	Removal of Existing Equipment/Excavation	1	$10,250.00	$10,250.00
Disposal	Dumpster	2	$1,500.00	$3,000.00
Eng Drwgs	Engineered Sealed Drawings	1	$1,250.00	$1,250.00
Permits	Building Permit Expenses and Expediting Fees	1	$5,000.00	$5,000.00

Notes:

PLAYMORE

Recreational
Products & Services

10271 Deer Run Farms Road, Suite 1
Fort Myers, FL 33966
(239) 791-2400 (239) 791-2401 fax
(888) 886-3757 toll free
www.playmoreonline.com

QUOTATION

12/15/21

Job Number: 16692

Phase: Opt 5 Rev A

Revision:

Client: City of Jacksonville
117 West Duval St.
Jacksonville FL 32202

Job: Barney Browning Park
6014 Norwood Avenue
Jacksonville FL 32208

Item	Description	Quantity	Cost	Subtotal
		Subtotal:		$40,446.16
		Grand Totals:		$99,958.71

PLAYMORE

Recreational Products & Services

10271 Deer Run Farms Road, Suite 1
Fort Myers, FL 33966
(239) 791-2400 (239) 791-2401 fax
(888) 886-3757 toll free
www.playmoreonline.com

QUOTATION

12/15/2021

Job Number: 16692

Phase: Opt 5 Rev A

Revision:

Client: City of Jacksonville
117 West Duval St.
Jacksonville FL 32202

Job: Barney Browning Park
6014 Norwood Avenue
Jacksonville FL 32208

General Terms:
Acceptance by a signature, purchase order, or contract based on this proposal indicates that you are in full agreement with all terms and conditions of this proposal, including the following:

- Prices are valid for 30 days, unless otherwise noted. After 30 days, prices are subject to change without notice.
- Sales Tax will be charged unless a valid Sales Tax Exemption Certificate is presented with order.
- Specify all colors and options in writing. Any discrepancies that arise due to oral selections will be the responsibility of the customer.
- If the customer is installing equipment, all equipment is to be installed per manufacturer's instructions and applicable guidelines.
- Installation, site work, permits, engineering, etc. are not included unless noted.

Building Permits:
Building permits are the responsibility of the owner. If a building permit is required for your project, the following options are available.

- Add 5% (minimum $1,500) to the quotation/contract price. Playmore Recreational Products and Services will cover the costs of all the building permit fees and expeditor fees.
- Playmore Recreational Products and Services can assist the customer in obtaining their own permit. Customer is responsible for all fees directly to the permitting agency and/or the expediting company.

NOTE – All zoning, planning, environmental, etc. permits and approvals are the responsibility of others as well as any required site plans. If signed and sealed engineered drawings are needed for the installation of equipment, this will be included on the proposal. If it is omitted and later discovered necessary, the cost will be the responsibility of the customer.

Standard Services Include:

- Shipping Notification/Receiving Instructions
- Pre-Installation On-Site Meeting
- Underground Utility Check (Sunshine State One Call)
- Accept Delivery and Unload Equipment (If site is ready.)
- Moving New Equipment at Job Site
- Layout of Equipment
- Installation of Equipment and Materials per Manufacturer's Instructions
- Trash Clean Up (Leave on site.)
- Post-Installation Walk Through
- Maintenance Explanation

Customer Responsibilities (unless otherwise noted in the applicable quotation/contract):

- Trash Disposal – Dumpsters or Off Site Disposal.
- Accept Delivery and Unload Equipment (If site is not ready.). $500.00 Charge will apply if Customer wants Installers to Unload.
- Provide Area for Storage and Staging.
- Secure Site and Equipment.

Some Optional Responsibilities (Must be clearly outlined in the applicable quotation/contract):

- Removal of Existing Equipment.
- Site Preparation, Grading, Drainage Systems, etc.
- Engineered Drawings for Purchased Equipment.
- Other Permits or Engineered Drawings (i.e. zoning permits, environmental permits, site surveys, etc.)

*Any other responsibilities must be clearly outlined in the applicable quotation/contract.

General Notes:
Access/Utilities. Access must be provided to the installation area for heavy trucks and equipment. Access of equipment and personnel is the obligation of the customer to provide until the project is fully completed. We will take every precaution to avoid damage, however any damage caused by the normal installation of our product, such as to sod, concrete sidewalks, private underground utilities, etc., will be the responsibility of the customer, as will any additional costs associated with limiting damage, such as providing plywood over sod for access. If access is not reasonably close to the jobsite, any additional costs incurred due to having to transport materials and/or supplies will be the responsibility of the customer.

Rock/Foreign Object Clause. Most installations require digging of holes and footing equipment in concrete below finished grade. Removal of existing ground covers such as asphalt, concrete, tan bark, sand, pea gravel, wood fiber, rubber matting, poured-in-place rubber surfacing, or any other material that interferes or delays the digging of holes, is the responsibility of others, unless otherwise noted. If excessive underground obstructions such as rocks, coral, asphalt, concrete, pipes, drainage systems, root systems, water, or any other unknown obstructions are discovered, charges will be added to the original proposal.

Playground Surfacing. All playground equipment is to be installed over safety surfacing per CPSC guidelines and ASTM standards. If the customer contracts for something contrary to the guidelines, they are accepting all responsibility for any liability and future litigation that may arise.

Acceptance Signature: X_____ Date:_____ P.O.#_____

PLAYM-1

OP ID: RCL

ACORD

CERTIFICATE OF LIABILITY INSURANCE

DATE (MM/DD/YYYY) 01/20/2022

APPROVED By WVerdejo at 10:17am, Jan 20, 2022

THIS CERTIFICATE IS ISSUED AS A MATTER OF INFORMATION ONLY AND CONFERS NO RIGHTS UPON THE CERTIFICATE HOLDER. THIS CERTIFICATE DOES NOT AFFIRMATIVELY OR NEGATIVELY AMEND, EXTEND OR ALTER THE COVERAGE AFFORDED BY THE POLICIES BELOW. THIS CERTIFICATE OF INSURANCE DOES NOT CONSTITUTE A CONTRACT BETWEEN THE ISSUING INSURER(S), AUTHORIZED REPRESENTATIVE OR PRODUCER, AND THE CERTIFICATE HOLDER.

IMPORTANT: If the certificate holder is an ADDITIONAL INSURED, the policy(ies) must have ADDITIONAL INSURED provisions or be endorsed. If SUBROGATION IS WAIVED, subject to the terms and conditions of the policy, certain policies may require an endorsement. A statement on this certificate does not confer rights to the certificate holder in lieu of such endorsement(s).

PRODUCER
765-534-3152
Cooper Insurance Service, Inc
Playground Book
P.O. Box 638
Lapel, IN 46051
Bill Hodgkins

CONTACT NAME: Bill Hodgkins
PHONE (A/C, No, Ext): 765-534-3152 FAX (A/C, No):
E-MAIL ADDRESS: BillH@Cooperindiana.com

INSURER(S) AFFORDING COVERAGE	NAIC #
INSURER A : Cincinnati Specialty Un Ins Co	13037
INSURER B : National Union Fire Ins Co	19445
INSURER C : Zurich American Insurance Co.	16535
INSURER D :	
INSURER E :	
INSURER F :	

INSURED
Playmore West, Inc.dba
Playmore Recreational Products
and Services
10271 Deer Run Farm Rd, Ste 1
Fort Myers, FL 33966

COVERAGES CERTIFICATE NUMBER: REVISION NUMBER:

THIS IS TO CERTIFY THAT THE POLICIES OF INSURANCE LISTED BELOW HAVE BEEN ISSUED TO THE INSURED NAMED ABOVE FOR THE POLICY PERIOD INDICATED. NOTWITHSTANDING ANY REQUIREMENT, TERM OR CONDITION OF ANY CONTRACT OR OTHER DOCUMENT WITH RESPECT TO WHICH THIS CERTIFICATE MAY BE ISSUED OR MAY PERTAIN, THE INSURANCE AFFORDED BY THE POLICIES DESCRIBED HEREIN IS SUBJECT TO ALL THE TERMS EXCLUSIONS AND CONDITIONS OF SUCH POLICIES. LIMITS SHOWN MAY HAVE BEEN REDUCED BY PAID CLAIMS.

INSR LTR	TYPE OF INSURANCE	ADDL INSD	SUBR WVD	POLICY NUMBER	POLICY EFF (MM/DD/YYYY)	POLICY EXP (MM/DD/YYYY)	LIMITS	
A	X COMMERCIAL GENERAL LIABILITY							
	CLAIMS-MADE X OCCUR	X	X	CSU0143119	12/14/2021	12/14/2022	EACH OCCURRENCE	$ 1,000,000
							DAMAGE TO RENTED PREMISES (Ea occurrence)	$ 100,000
							MED EXP (Any one person)	$ 5,000
							PERSONAL & ADV INJURY	$ 1,000,000
	GEN'L AGGREGATE LIMIT APPLIES PER						GENERAL AGGREGATE	$ 3,000,000
	POLICY X PRO-JECT LOC						PRODUCTS - COMP/OP AGG	$ 3,000,000
	OTHER							$
	AUTOMOBILE LIABILITY						COMBINED SINGLE LIMIT (Ea accident)	$
	ANY AUTO						BODILY INJURY (Per person)	$
	OWNED AUTOS ONLY / SCHEDULED AUTOS						BODILY INJURY (Per accident)	$
	HIRED AUTOS ONLY / NON-OWNED AUTOS ONLY						PROPERTY DAMAGE (Per accident)	$
								$
B	UMBRELLA LIAB X OCCUR						EACH OCCURRENCE	$ 5,000,000
	X EXCESS LIAB CLAIMS-MADE			BE 028424153	12/14/2021	12/14/2022	AGGREGATE	$ 5,000,000
	DED RETENTION $							$
	WORKERS COMPENSATION AND EMPLOYERS' LIABILITY						PER STATUTE / OTH-ER	
	ANY PROPRIETOR/PARTNER/EXECUTIVE OFFICER/MEMBER EXCLUDED? (Mandatory in NH) Y/N	N/A					E.L. EACH ACCIDENT	$
	If yes, describe under DESCRIPTION OF OPERATIONS below						E.L. DISEASE - EA EMPLOYEE	$
							E.L. DISEASE - POLICY LIMIT	$
C	Installation Float			ER73818669	01/20/2021	01/20/2022	Limit	66,000

DESCRIPTION OF OPERATIONS / LOCATIONS / VEHICLES (ACORD 101, Additional Remarks Schedule, may be attached if more space is required)

Project: Barney Browning

SEE 2ND PAGE

CERTIFICATE HOLDER

JACKSOL

City of Jacksonville
117 W. Duval Street
Suite #335
Jacksonville, FL 32202

CANCELLATION

SHOULD ANY OF THE ABOVE DESCRIBED POLICIES BE CANCELLED BEFORE THE EXPIRATION DATE THEREOF, NOTICE WILL BE DELIVERED IN ACCORDANCE WITH THE POLICY PROVISIONS.

AUTHORIZED REPRESENTATIVE

© 1988-2015 ACORD CORPORATION. All rights reserved.
The ACORD name and logo are registered marks of ACORD

City of Jacksonville, its members, officials, officers, employees, and agents are named as additional insured with regard to General Liability on a primary and non-contributory basis. A waiver of subrogation in favor of the City of Jacksonville, its members, officials, officers, employees, and agents and a 30 day notice of cancellation to the City of Jacksonville apply to General Liability.

ACORD

CERTIFICATE OF LIABILITY INSURANCE

DATE (MM/DD/YYYY)
01/06/2022

APPROVED
By WVerdejo at 10:17 am, Jan 21, 2022

THIS CERTIFICATE IS ISSUED AS A MATTER OF INFORMATION ONLY AND CONFERS NO RIGHTS UPON THE CERTIFICATE HOLDER. THIS CERTIFICATE DOES NOT AFFIRMATIVELY OR NEGATIVELY AMEND, EXTEND OR ALTER THE COVERAGE AFFORDED BY THE POLICIES BELOW. THIS CERTIFICATE OF INSURANCE DOES NOT CONSTITUTE A CONTRACT BETWEEN THE ISSUING INSURER(S), AUTHORIZED REPRESENTATIVE OR PRODUCER, AND THE CERTIFICATE HOLDER.

IMPORTANT: If the certificate holder is an ADDITIONAL INSURED, the policy(ies) must have ADDITIONAL INSURED provisions or be endorsed. If SUBROGATION IS WAIVED, subject to the terms and conditions of the policy, certain policies may require an endorsement. A statement on this certificate does not confer rights to the certificate holder in lieu of such endorsement(s).

PRODUCER
Carlock & Associates Insurance, Inc.
2002 Del Prado Boulevard S Ste #200
Cape Coral, FL 33990

CONTACT NAME: KEITH ROSSELL
PHONE (A/C, No, Ext): (239) 549-0221
FAX (A/C, No): (239) 549-6098
E-MAIL ADDRESS: keith@carlockinsurance.com

INSURER(S) AFFORDING COVERAGE	NAIC #
INSURER A: AUTO-OWNERS INSURANCE COMPANY	18988
INSURER B:	
INSURER C:	
INSURER D:	
INSURER E:	
INSURER F:	

INSURED
PLAYMORE WEST INC DBA PLAYMORE RECREATIONAL PRODUCTS & SERVICES
10271 DEER RUN FARMS ROAD SUITE #1
FORT MYERS, FL 33966-1078

COVERAGES CERTIFICATE NUMBER: REVISION NUMBER:

THIS IS TO CERTIFY THAT THE POLICIES OF INSURANCE LISTED BELOW HAVE BEEN ISSUED TO THE INSURED NAMED ABOVE FOR THE POLICY PERIOD INDICATED. NOTWITHSTANDING ANY REQUIREMENT, TERM OR CONDITION OF ANY CONTRACT OR OTHER DOCUMENT WITH RESPECT TO WHICH THIS CERTIFICATE MAY BE ISSUED OR MAY PERTAIN, THE INSURANCE AFFORDED BY THE POLICIES DESCRIBED HEREIN IS SUBJECT TO ALL THE TERMS, EXCLUSIONS AND CONDITIONS OF SUCH POLICIES. LIMITS SHOWN MAY HAVE BEEN REDUCED BY PAID CLAIMS.

INSR LTR	TYPE OF INSURANCE	ADDL INSD	SUBR WVD	POLICY NUMBER	POLICY EFF (MM/DD/YYYY)	POLICY EXP (MM/DD/YYYY)	LIMITS	
	COMMERCIAL GENERAL LIABILITY CLAIMS-MADE / OCCUR						EACH OCCURRENCE	$
							DAMAGE TO RENTED PREMISES (Ea occurrence)	$
							MED EXP (Any one person)	$
							PERSONAL & ADV INJURY	$
	GEN'L AGGREGATE LIMIT APPLIES PER POLICY / PROJECT / LOC						GENERAL AGGREGATE	$
	OTHER						PRODUCTS - COMP/OP AGG	$
								$
A	AUTOMOBILE LIABILITY X ANY AUTO						COMBINED SINGLE LIMIT (Ea accident)	$ 1,000,000
	OWNED AUTOS ONLY / SCHEDULED AUTOS	X	X	4687381400	07/16/21	07/16/22	BODILY INJURY (Per person)	$
	HIRED AUTOS ONLY / NON-OWNED AUTOS ONLY						BODILY INJURY (Per accident)	$
							PROPERTY DAMAGE (Per accident)	$
								$
	UMBRELLA LIAB / OCCUR						EACH OCCURRENCE	$
	EXCESS LIAB / CLAIMS-MADE						AGGREGATE	$
	DED / RETENTION $							$
A	WORKERS COMPENSATION AND EMPLOYERS' LIABILITY ANY PROPRIETOR/PARTNER/EXECUTIVE OFFICER/MEMBER EXCLUDED? (Mandatory in NH) Y/N: Y If yes, describe under DESCRIPTION OF OPERATIONS below	N/A	X	20685578	07/16/21	07/16/22	X PER STATUTE / OTHER	
							E.L. EACH ACCIDENT	$ 1,000,000
							E.L. DISEASE - EA EMPLOYEE	$ 1,000,000
							E.L. DISEASE - POLICY LIMIT	$ 1,000,000

DESCRIPTION OF OPERATIONS / LOCATIONS / VEHICLES (ACORD 101, Additional Remarks Schedule, may be attached if more space is required)

CITY OF JACKSONVILLE, ITS MEMBERS, OFFICIALS, OFFICERS, EMPLOYEES AND AGENTS ARE NAMED AS ADDITIONAL INSURED ON AUTOMOBILE LIABILITY.

A WAIVER OF SUBROGATION IN FAVOR OF THE CITY OF JACKSONVILLE, ITS MEMBERS, OFFICIALS, OFFICERS, EMPLOYEES, AGENTS APPLIES TO AUTO LIABILITY AND WORKERS COMPENSATION.

30 DAY NOTICE OF CANCELLATION TO THE CITY OF JACKSONVILLE APPLIES TO ALL COVERAGE.

PROJECT: BARNEY BROWNING

CERTIFICATE HOLDER

CITY OF JACKSONVILLE
117 W. DUVAL STREET
SUITE 335
JACKSONVILLE, FL 32202
Phone: -
Fax: -

CANCELLATION

SHOULD ANY OF THE ABOVE DESCRIBED POLICIES BE CANCELLED BEFORE THE EXPIRATION DATE THEREOF, NOTICE WILL BE DELIVERED IN ACCORDANCE WITH THE POLICY PROVISIONS.

AUTHORIZED REPRESENTATIVE

<DMM>

© 1988-2015 ACORD CORPORATION. All rights reserved.
The ACORD name and logo are registered marks of ACORD

PLAYMORE

Recreational Products & Services

10271 Deer Run Farms Road, Suite 1
Fort Myers, FL 33966
(239) 791-2400 (239) 791-2401 fax
(888) 886-3757 toll free
www.playmoreonline.com

QUOTATION

12/15/21

Job Number: 16692

Phase: Opt 5 Rev A

Revision:

Client: City of Jacksonville
117 West Duval St.
Jacksonville FL 32202

Job: Barney Browning Park
6014 Norwood Avenue
Jacksonville FL 32208

Contact: Ronique Gibson Phone: 904-255-7923 Fax: Email: rgibson@coj.net

Sales Rep: James Peacock Terms: 50% Equipment Deposit/Net 30

Item	Description	Quantity	Cost	Subtotal
1 Equipment				
UC-2000	UC-2000	1	$28,646.00	$28,646.00
ZZXX0151	SPINAMI	1	$6,013.00	$6,013.00
ZZXX0193	UNITY ROCKR	1	$7,448.00	$7,448.00
ZZXX0198	UNITY SWING FRAME	1	$6,984.00	$6,984.00
ZZXX0204	BASKET SWING	1	$1,996.00	$1,996.00
ZZXX0660	CONCERTO SMALL CABASA	1	$1,026.00	$1,026.00
ZZXX0663	CONCERTO 2 CONGAS	1	$1,880.00	$1,880.00
ZZXX0666	CONCERTO VIBES	1	$5,172.00	$5,172.00
Discount	School District of Manatee County 21-0053-MR	-1	$2,958.25	-$2,958.25
Discount	Courtesy Discount	-1	$7,000.00	-$7,000.00
EWF	Engineered Wood Fiber, priced per CY	148	$27.35	$4,047.80
EWF	GeoTex Duraliner	2	$160.00	$320.00
		Subtotal:		$53,574.55
2 Freight				
Freight	Playworld Freight	1	$4,750.00	$4,750.00
Freight	EWF Freight	1	$1,188.00	$1,188.00
		Subtotal:		$5,938.00
3 Installation				
PSI Installation	Installation of Playworld Equipment per Manatee Contract	1	$17,986.16	$17,986.16
Installation	Installation of EWF	1	$2,960.00	$2,960.00
Removal	Removal of Existing Equipment/Excavation	1	$10,250.00	$10,250.00
Disposal	Dumpster	2	$1,500.00	$3,000.00
Eng Drwgs	Engineered Sealed Drawings	1	$1,250.00	$1,250.00
Permits	Building Permit Expenses and Expediting Fees	1	$5,000.00	$5,000.00

Notes:

PLAYMORE
Recreational
Products & Services

10271 Deer Run Farms Road, Suite 1
Fort Myers, FL 33966
(239) 791-2400 (239) 791-2401 fax
(888) 886-3757 toll free
www.playmoreonline.com

QUOTATION

12/15/21

Job Number: 16692

Phase: Opt 5 Rev A

Revision:

Client: City of Jacksonville
117 West Duval St.
Jacksonville FL 32202

Job: Barney Browning Park
6014 Norwood Avenue
Jacksonville FL 32208

Item	Description	Quantity	Cost	Subtotal
		Subtotal:		$40,446.16
		Grand Totals:		$99,958.71

PLAYMORE

Recreational
Products & Services

10271 Deer Run Farms Road, Suite 1
Fort Myers, FL 33966
(239) 791-2400 (239) 791-2401 fax
(888) 886-3757 toll free
www.playmoreonline.com

QUOTATION

12/15/2021
Job Number: 16692
Phase: Opt 5 Rev A
Revision:

Client: City of Jacksonville
117 West Duval St.
Jacksonville FL 32202

Job: Barney Browning Park
6014 Norwood Avenue
Jacksonville FL 32208

General Terms:
Acceptance by a signature, purchase order, or contract based on this proposal indicates that you are in full agreement with all terms and conditions of this proposal, including the following:

- Prices are valid for 30 days, unless otherwise noted. After 30 days, prices are subject to change without notice.
- Sales Tax will be charged unless a valid Sales Tax Exemption Certificate is presented with order
- Specify all colors and options in writing. Any discrepancies that arise due to oral selections will be the responsibility of the customer
- If the customer is installing equipment, all equipment is to be installed per manufacturer's instructions and applicable guidelines.
- Installation, site work, permits, engineering, etc. are not included unless noted.

Building Permits:
Building permits are the responsibility of the owner. If a building permit is required for your project, the following options are available.

- Add 5% (minimum $1,500) to the quotation/contract price. Playmore Recreational Products and Services will cover the costs of all the building permit fees and expeditor fees.
- Playmore Recreational Products and Services can assist the customer in obtaining their own permit. Customer is responsible for all fees directly to the permitting agency and/or the expediting company.

NOTE – All zoning, planning, environmental, etc. permits and approvals are the responsibility of others as well as any required site plans. If signed and sealed engineered drawings are needed for the installation of equipment, this will be included on the proposal. If it is omitted and later discovered necessary, the cost will be the responsibility of the customer

Standard Services Include:

- Shipping Notification/Receiving Instructions
- Pre-Installation On-Site Meeting
- Underground Utility Check (Sunshine State One Call)
- Accept Delivery and Unload Equipment (If site is ready)
- Moving New Equipment at Job Site
- Layout of Equipment
- Installation of Equipment and Materials per Manufacturer's Instructions
- Trash Clean Up (Leave on site.)
- Post-Installation Walk Through
- Maintenance Explanation

Customer Responsibilities (unless otherwise noted in the applicable quotation/contract):

- Trash Disposal – Dumpsters or Off Site Disposal.
- Accept Delivery and Unload Equipment (If site is not ready). $500 00 Charge will apply if Customer wants Installers to Unload.
- Provide Area for Storage and Staging.
- Secure Site and Equipment.

Some Optional Responsibilities (Must be clearly outlined in the applicable quotation/contract):

- Removal of Existing Equipment.
- Site Preparation, Grading, Drainage Systems, etc.
- Engineered Drawings for Purchased Equipment.
- Other Permits or Engineered Drawings (i.e. zoning permits, environmental permits, site surveys, etc)

*Any other responsibilities must be clearly outlined in the applicable quotation/contract.

General Notes
Access/Utilities. Access must be provided to the installation area for heavy trucks and equipment. Access of equipment and personnel is the obligation of the customer to provide until the project is fully completed. We will take every precaution to avoid damage, however any damage caused by the normal installation of our product, such as to sod, concrete sidewalks, private underground utilities, etc , will be the responsibility of the customer, as will any additional costs associated with limiting damage, such as providing plywood over sod for access. If access is not reasonably close to the jobsite, any additional costs incurred due to having to transport materials and/or supplies will be the responsibility of the customer

Rock/Foreign Object Clause. Most installations require digging of holes and footing equipment in concrete below finished grade. Removal of existing ground covers such as asphalt, concrete, tan bark, sand, pea gravel, wood fiber, rubber matting, poured-in-place rubber surfacing, or any other material that interferes or delays the digging of holes, is the responsibility of others, unless otherwise noted. If excessive underground obstructions such as rocks, coral, asphalt, concrete, pipes, drainage systems, root systems, water, or any other unknown obstructions are discovered, charges will be added to the original proposal.

Playground Surfacing. All playground equipment is to be installed over safety surfacing per CPSC guidelines and ASTM standards. If the customer contracts for something contrary to the guidelines, they are accepting all responsibility for any liability and future litigation that may arise.

Acceptance Signature: X_____ Date:_____ P.O.#_____

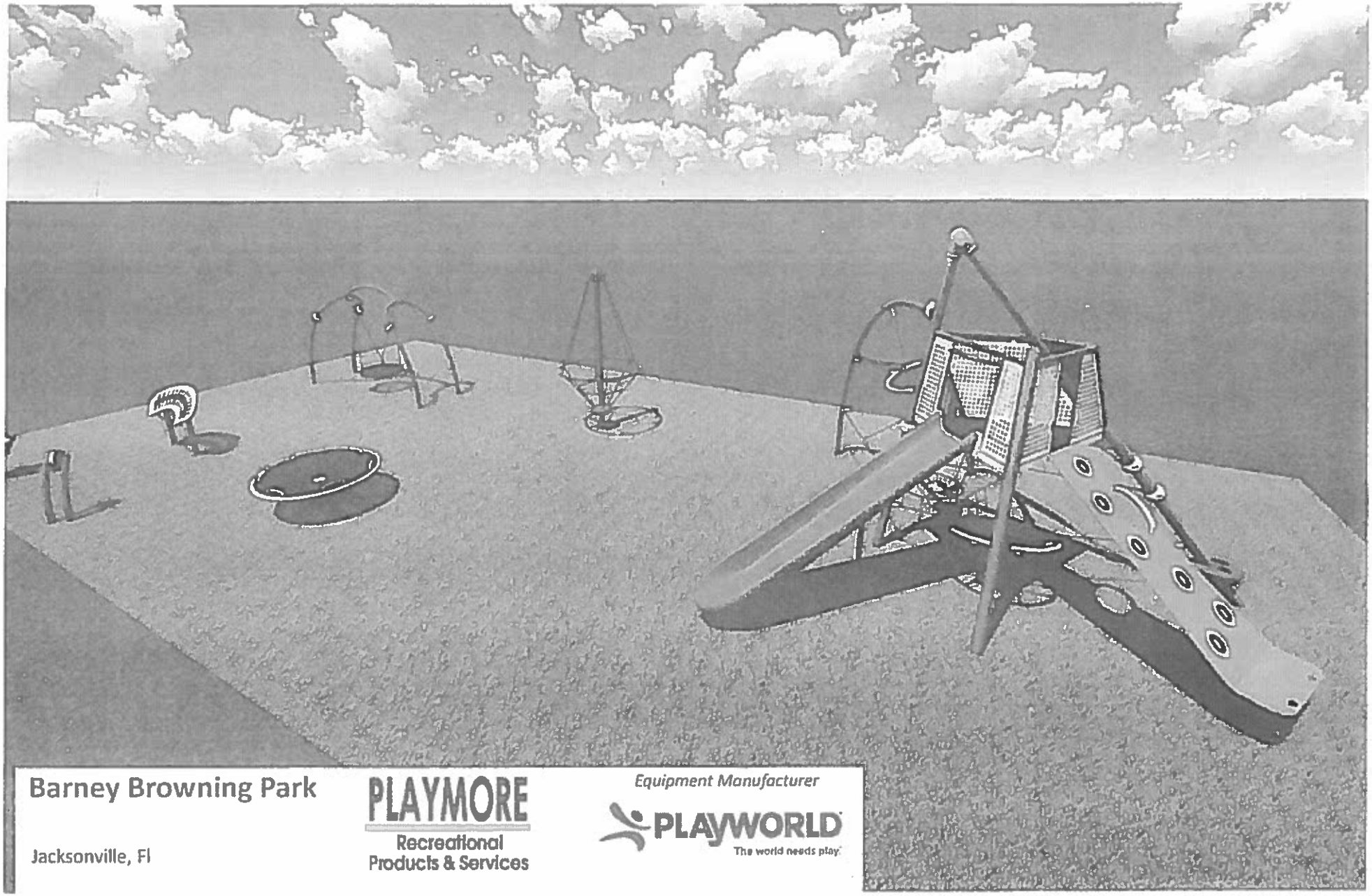

Barney Browning Park

Jacksonville, Fl

PLAYMORE
Recreational
Products & Services

Equipment Manufacturer

PLAYWORLD
The world needs play.

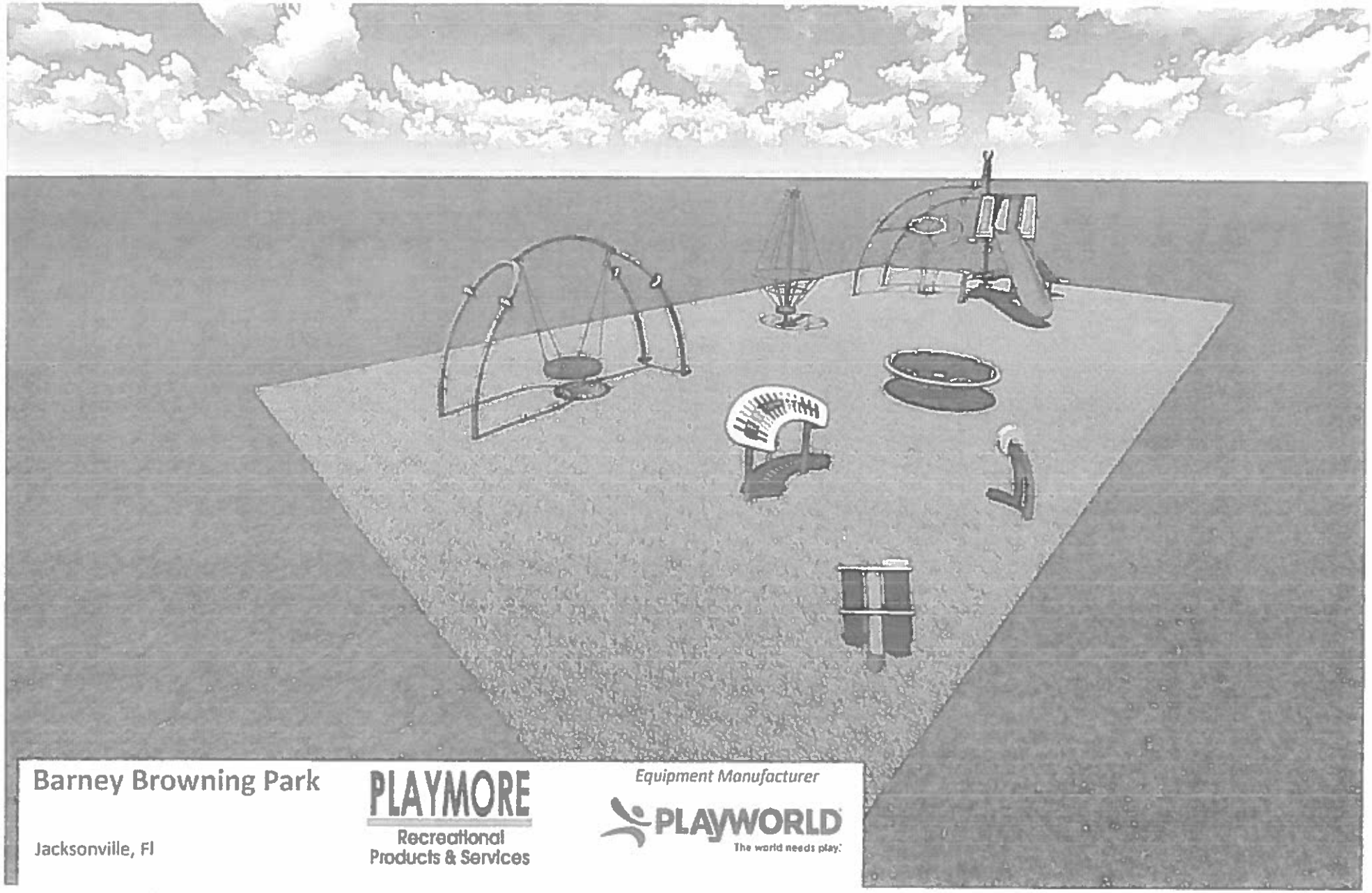

Barney Browning Park

Jacksonville, Fl

PLAYMORE
Recreational
Products & Services

Equipment Manufacturer

PLAYWORLD
The world needs play.

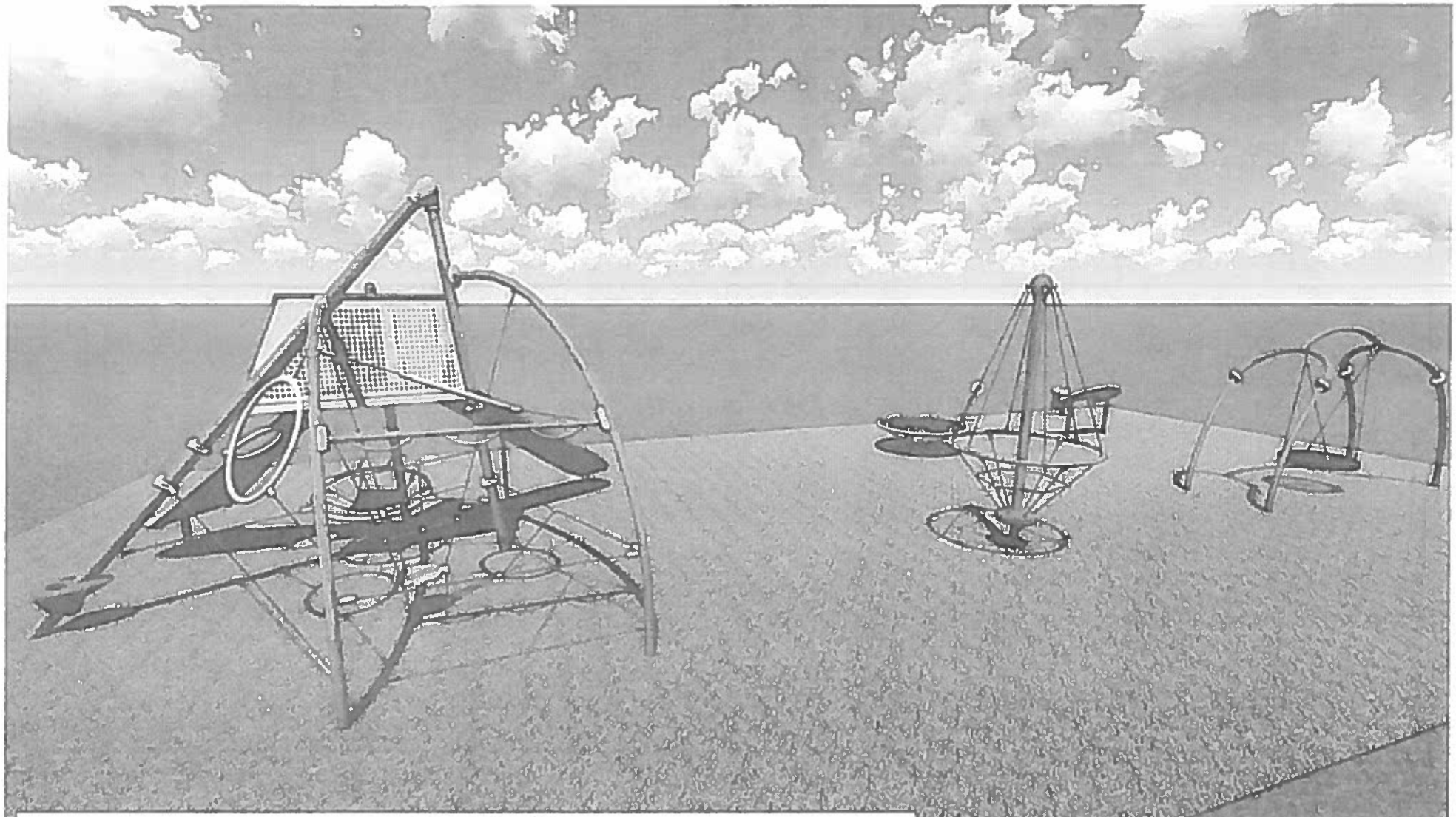

Barney Browning Park

Jacksonville, Fl

PLAYMORE
Recreational
Products & Services

Equipment Manufacturer

PLAYWORLD
The world needs play.

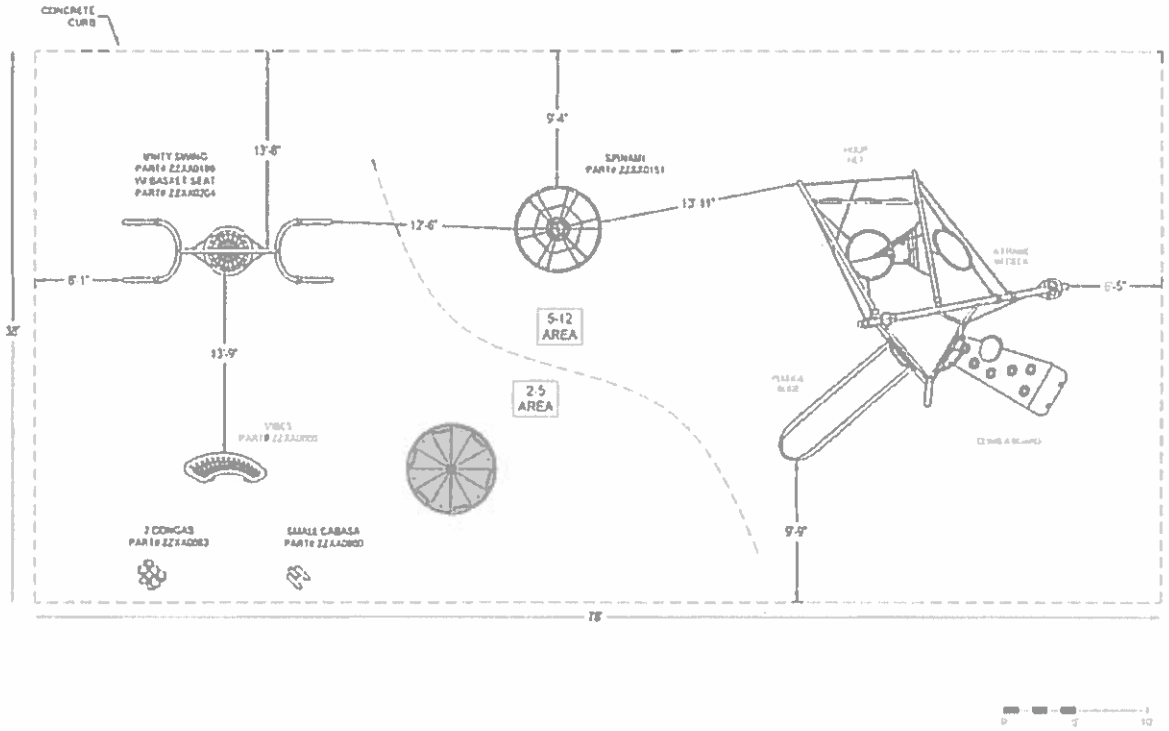

*PLAYGROUND SUPERVISION REQUIRED

PLAYWORLD

Playmore Recreational Products & Services
10271 Deer Run Farms Road
Suite 1
Fort Myers, FL 33968

EQUIPMENT SIZE
22' x 19' x 13'

USE ZONE
38' x 78'

AREA
2,965 SqFt.

PERIMETER
232 FL.

FALL HEIGHT
8'

USER CAPACITY
59

AGE GROUP
2-12

ADA SCHEDULE	Accessible Elevated Activities	Accessible Ground Level Activities	Accessible Ground Level Play Types
Total Elevated Play Activities	2		
Total Ground Level Play Activities	2		
Required	1	1	1
Provided	2	2	2

✓ ASTM F1487-21
✓ CPSC #325

PROJECT NO
21-7370A

SCALE
1/8"=1'-0"

DRAWN BY
WILL FARRELL

Paper Size
B

DATE
12-14-2021

BARNEY BROWNING OPT 4

JACKSONVILLE, FL

PURCHASING DEPARTMENT
215 Manatee Avenue West
Bradenton, Florida 34205
Direct Line (941) 708-8770 FAX Line (941) 708-8485

Contract of Award Agreement No. 21-0053-MR

THIS AGREEMENT is entered into by and between the Manatee County School District, hereinafter "District" and Playmore West, Inc. , "Contractor".

WITNESSETH, that the District and the Contractor in consideration of the mutual covenants contained herein agree as follow:

1. **The Work:** Contractor shall perform and render all services as prescribed and required by the Instructions to Proposers, Proposal Form, General Conditions, Specials Conditions, Scope of Work, Specifications, and all other documents forming a part of the Proposal package and any other documents signed by both parties relating to the subject matter of the Agreement, all of which are incorporated by reference as though set forth in full herein for:
   PARK AND PLAYGROUND EQUIPMENT, SDMC No. 21-0053

2. **Contract Term:** The term of this Agreement shall be from September 1, 2020_ through August 31, 2023 . Any deviation from the awarded contract period or cancellation of any item(s) awarded may result in your company being barred from doing business with the School District of Manatee County, in accordance with School District Policies and Procedures. Multi-year contracts will automatically renew for one (1) year periods during the initial contract period above, unless the District notifies the supplier of intent to rebid or negotiate new terms ninety (90) days prior to the contract anniversary date. This Agreement shall not expire until all work under Purchase Orders issued is completed, accepted and paid for by the District. All indemnification provisions contained in the Agreement shall survive beyond the expiration of the Agreement.

3. **Payment Terms:** The standard payment terms for the School District of Manatee County are Net 30. Invoices must include the purchase order number prominently displayed in order to receive payment. Payments will be made only to the vendor listed on the purchase order.

4. **Invoice Requirements:** The selected Proposer shall submit an invoice to the District, each month, after the services have been performed and have been received and accepted by the District. The amount charged shall not be in excess of the rates and fees in the Agreement.

   The date of the invoices shall not exceed ten (10) working days from the performance of the work. Under no circumstances shall the invoice be submitted to the District in advance of the performance of the work.

   The invoice shall contain the following basic information: the awarded Bidder's name and address, invoice number, date of invoice, description of the service performed, the contract number, purchase order number, and any discounts. The invoice shall be in detail sufficient for a proper pre-audit and post audit thereof. Each bill or invoice must properly identify the services, portion of services, and expenses for which compensation is sought.

5. **Non-Funding:** In the event sufficient budgeted funds are not available for a new fiscal period, the Purchasing Department shall notify the vendor of such an occurrence and the contract shall terminate on the last day of the current fiscal period without penalty or expense to the District.

6. **Termination for Cause:** The School District of Manatee County reserves the right to terminate this contract in whole or in part at any time before the date of completion, in the event it is determined that the provider has failed to comply with the conditions of the agreement. The School Board shall promptly notify the Provider in writing of the determination and the reasons for the termination, together with the effective date of the

termination. Payments made to Providers or recoveries by the School Board under contracts terminated for cause shall be in accordance with the legal rights and liabilities of the parties under the laws of the State of Florida. Termination for cause includes terminations under 215.4725, F.S.

Termination for Convenience: Termination of this contract in whole or in part may be made by School District Manatee County when the district determines that the continuation of the contract would not produce beneficial results commensurate with the further expenditure of funds or in furtherance of the goals and directives of the School District Manatee County. Termination may be initiated within 30 days' notice when Board approval is not required and subject to Board approval when required.

7. **Compliance with the Sunshine Law:** The Florida Sunshine Law is a series of laws designed to guarantee that the public has access to the public records of governmental bodies in Florida, Fla. Stat. sec. 286.011 et. seq. and Fla. Stat. sec. 119.01 et. seq. The contracting party with The School Board of Manatee County hereby acknowledges and agrees to comply with The Florida "Sunshine" Law, including but, not limited to keeping and maintaining all records that relate and/or pertain to the terms of this agreement available for inspection and copying, public records requests, internal audits and for any other informational purpose.

8. **Equal Employment Opportunity:** Except as otherwise provided under 41 CFR Part 60, all contracts that meet the definition of "federally assisted construction contract" in 41 CFR Part 60–1.3 must include the equal opportunity clause provided under 41 CFR 60–1.4(b), in accordance with Executive Order 11246, "Equal Employment Opportunity" (30 FR 12319, 12935, 3 CFR Part, 1964– 1965 Comp., p. 339), as amended by Executive Order 11375, "Amending Executive Order 11246 Relating to Equal Employment Opportunity," and implementing regulations at 41 CFR part 60, "Office of Federal Contract Compliance Programs, Equal Employment Opportunity, Department of Labor."

9. **Anti-Discrimination**: a. the bidder certifies that they are in compliance with the non-discrimination clause contained in Section 202, Executive Order 11246, as amended by Executive Order 11375 relative to equal employment opportunity for all persons without regard to race, color, religion, sex or national origin. The provisions of the ADA Act of 1990 pertaining to employment shall also be applicable. b. the bidder shall not discriminate on the basis of race, gender, gender identity or expression, religion, national origin, ethnicity, sexual orientation, age or disability in the solicitation, selection, hiring, or treatment of sub-contractors, vendors, suppliers, or commercial customers. Bidder shall provide equal opportunity for sub-contractors to participate in all of its public sector and private sector sub-contracting opportunities, provided that nothing contained in this clause shall prohibit or limit otherwise lawful efforts to remedy the effects of marketplace discrimination that has occurred or is occurring in the marketplace. Bidder understands and agrees that violation of this clause is a material breach of the contract and may result in contract determination, debarment, or other sanctions.

10. **Minority, Small, and Women Owned Business**: School District of Manatee County encourages the use of Minority Owned Businesses, Small Businesses, and Women Owned Businesses. Contractor agrees to ensure small businesses, minority owned businesses and women's business enterprises are used whenever possible, such as when participation as partners, joint-venture's, prime contractor, sub-contractors, and in contracting opportunities.

11. **Force Majeure:** The term "FORCE MAJEURE" means circumstances beyond the reasonable control of a party, (such as acts of God, government restriction, wars, insurrections, labor disputes, financial insolvency, economic hardship, strife, failure of suppliers, communications or data systems) which delay or prevent the party from performing under the terms of this agreement. Affected performance obligations will be suspended during

the duration of the Forge Majeure., In the event that the Force Majeure persists more than 90 days, the party may elect to terminate this agreement upon written notice.

12. **Governing Law:** This agreement will be governed by the internal laws of the State of Florida, without regard to its conflicts of laws rules. Each party agrees to comply with all applicable laws in the performance of this agreement. All disputes are to be resolved in Manatee County, Florida by binding Arbitration before the American Arbitration Association or other mutually agreed and similar forum. The costs of such dispute will be borne by the individual party.

13. **Davis**-Bacon Act, as amended (40 U.S.C. 3141-3148): When required by Federal program legislation, all prime construction contracts in excess of $2,000 awarded by non-Federal entities must include a provision for compliance with the Davis-Bacon Act (40 U.S.C. 3141–3144, and 3146–3148) as supplemented by Department of Labor regulations (29 CFR Part 5, "Labor Standards Provisions Applicable to Contracts Covering Federally Financed and Assisted Construction"). In accordance with the statute, contractors must be required to pay wages to laborers and mechanics at a rate not less than the prevailing wages specified in a wage determination made by the Secretary of Labor. In addition, contractors must be required to pay wages not less than once a week. The non-Federal entity must place a copy of the current prevailing wage determination issued by the Department of Labor in each solicitation. The decision to award a contract or subcontract must be conditioned upon the acceptance of the wage determination. The non-Federal entity must report all suspected or reported violations to the Federal awarding agency. The contracts must also include a provision for compliance with the Copeland "AntiKickback" Act (40 U.S.C. 3145), as supplemented by Department of Labor regulations.

14. **Contract Work Hours and Safety Standards Act** (40 U.S.C. 3701–3708). Where applicable, all contracts awarded by the nonFederal entity in excess of $100,000 that involve the employment of mechanics or laborers must include a provision for compliance with 40 U.S.C. 3702 and 3704, as supplemented by Department of Labor regulations (29 CFR Part 5). Under 40 U.S.C. 3702 of the Act, each contractor must be required to compute the wages of every mechanic and laborer on the basis of a standard work week of 40 hours. Work in excess of the standard work week is permissible provided that the worker is compensated at a rate of not less than one and a half times the basic rate of pay for all hours worked in excess of 40 hours in the work week. The requirements of 40 U.S.C. 3704 are applicable to construction work and provide that no laborer or mechanic must be required to work in surroundings or under working conditions, which are unsanitary, hazardous, or dangerous. These requirements do not apply to the purchases of supplies or materials or articles ordinarily available on the open market, or contracts for transportation or transmission of intelligence.

15. **Rights to Inventions Made Under a Contract or Agreement:** If the Federal award meets the definition of "funding agreement" under 37 CFR §401.2 (a) and the recipient or sub recipient wishes to enter into a contract with a small business firm or nonprofit organization regarding the substitution of parties, assignment or performance of experimental, developmental, or research work under that "funding agreement," the recipient or sub recipient must comply with the requirements of 37 CFR Part 401, "Rights to Inventions Made by Nonprofit Organizations and Small Business Firms Under Government Grants, Contracts and Cooperative Agreements," and any implementing regulations issued by the awarding agency.

16. **Clean Air Act** (42 U.S.C. 7401–7671q.) and the Federal Water Pollution Control Act (33 U.S.C. 1251–1387), as amended: Contracts and sub grants of amounts in excess of $150,000 must contain a provision that requires the non-Federal award to agree to comply with all applicable standards, orders or regulations issued pursuant to the Clean Air Act (42 U.S.C. 7401–7671q) and the Federal Water Pollution Control Act as amended (33 U.S.C. 1251–1387). Violations must be reported to the Federal awarding agency and the Regional Office of the Environmental Protection Agency (EPA). Mandatory standards and policies relating to energy efficiency which are contained in the state energy conservation plan issued in compliance with the Energy Policy and Conservation Act (42 U.S.C. 6201).

17. **Debarment and Suspension** (Executive Orders 12549 and 12689): A contract award (see 2 CFR 180.220) must not be made to parties listed on the government wide Excluded Parties List System in the System for Award Management (SAM), in accordance with the OMB guidelines at 2 CFR 180 that implement Executive Orders 12549 (3 CFR Part 1986 Comp., p. 189) and 12689 (3 CFR Part 1989 Comp., p. 235), "Debarment and Suspension." The Excluded Parties List System in SAM contains the names of parties debarred, suspended, or otherwise excluded by agencies, as well as parties declared ineligible under statutory or regulatory authority other than Executive Order 12549.

18. **Byrd Anti-Lobbying Amendment** (31 U.S.C. 1352): Contractors that apply or bid for an award of $100,000 or more must file the required certification. Each tier certifies to the tier above that it will not and has not used Federal appropriated funds to pay any person or organization for influencing or attempting to influence an officer or employee of any agency, a member of Congress, officer or employee of Congress, or an employee of a member of Congress in connection with obtaining any Federal contract, grant or any other award covered by 31 U.S.C. 1352. Each tier must also disclose any lobbying with non-Federal funds that takes place in connection with obtaining any Federal award. Such disclosures are forwarded from tier to tier up to the non-Federal award.

19. **Section 6002 of The Solid Waste Disposal Act:** The requirements of Section 6002 include procuring only items designated in guidelines of the Environmental Protection Agency (EPA) at 40 CFR part 247 that contain the highest percentage of recovered materials practicable, consistent with maintaining a satisfactory level of competition, where the purchase price of the item exceeds $10,000 or the value of the quantity acquired during the preceding fiscal year exceeded $10,000; procuring solid waste management services in a manner that maximizes energy and resource recovery; and establishing an affirmative procurement program for procurement of recovered materials identified in the EPA guidelines. (78 FR 78608, Dec. 26, 2013, as amended at 79 FR 75885, Dec. 19, 2014).

20. **Record Retention Requirements for Contracts Paid for with Federal Funds** 2 CFR §200.333: When federal funds are expended by SDMC for any contract resulting from this procurement process, the vendor certifies that it will comply with the record retention requirements detailed in 2 CFR §200.333. The vendor further certifies that vendor will retain all records as required by 2 CFR §200.333 for a period of three years after grantees or sub-grantees submit final expenditure reports or quarterly or annual financial reports, as applicable, and all other pending matters are closed.

21. **Indemnification:** Contractor agrees to defend indemnify and hold harmless the School Board, their agents, employees, officers and Board Members against any and all third-party claims, losses, damages, expenses, or liabilities arising from any action or failure to act with respect to this agreement to the extent provided by law. When pertaining to a contract Contractor will obtain at its own cost and expense general liability insurance with minimum coverage amounts of at least one million dollars per occurrence and three million dollars in aggregate coverage and such insurance will name The School Board, their Board Members and School District Employees as an additional insured. To the extent applicable, Contractor will maintain and furnish workers compensation insurance. A certificate of insurance will be furnished within ten business days from the execution of this agreement. Failure to provide such insurance allows the School Board, the election to immediately terminate this agreement. Certain employees are subject to written waiver of indemnification. Failure to provide such insurance allows the District the election to immediately terminate this agreement.

22. **Insurance:** Contractor shall furnish the School District of Manatee County with proof of:
    a. Statutory Limits of Worker's Compensation in compliance with Chapter 440, Florida Statute, if required.
    b. Employer's Liability Insurance in an amount not less than $1,000,000.00 per occurrence.

c. Comprehensive General Liability Insurance in an amount equal to or greater than $1,000,000.00 per occurrence for any occurrence resulting in bodily injury or death to any one or group of persons, including any consequential damages that arise therefrom.
   i. If policy is on a "CLAIMS MADE" basis, contractor's insurance carrier will identify policy as such and indicate in writing the amount of claims paid by this policy and reserves outstanding. Policy aggregates must equal at least two (2) times the occurrence limit.
d. Liability Insurance in an amount equal to or greater than $1,000,000.00 per occurrence for bodily injuries and/or death to any person or persons caused by passenger automobiles or commercial vehicles.
e. Liability Insurance equal to or greater than $1,000,000.00 per occurrence for property damage caused by passenger automobiles or commercial vehicles.

23. **Compliance with Jessica Lunsford Act:** The School District of Manatee County and State of Florida, requires all contractors/subcontracts to comply with the Jessica Lunsford Act (JLA) which consists of a level II background screening via fingerprinting. Vendors, individuals or entities under contract with the School Board of Manatee County required to go on school grounds when students are present, must comply with the requirements of the law and agree to indemnify and hold harmless the School Board of Manatee County for any claims made against the School Board related to the failure to comply with Florida Statute Section 1012.465 and Section 1012.32 Florida Statutes. Information on JLA requirements and how to comply can be accessed at www.manateeschools.net.

24. **Sovereign Immunity:** The parties acknowledge and agree that the School Board of Manatee County, Florida, as an agency of the State of Florida, is a sovereign entity that is by law immune from suit except to the extent specified in 768.28 of Florida Statutes. No provision of the agreement shall constitute, or be interpreted as, a waiver of sovereign immunity, and all defenses relative to sovereign immunity shall be preserved.

IF THE CONTRACTOR HAS QUESTIONS REGARDING THE APPLICA BILITY OF CHAPTER 119, FLORIDA STATUTES, TO THE CONTRACTOR' S DUTY TO PROVIDE PUBLIC RECORDS RELATING TO THIS CONTRACT, CONTACT THE CUSTODIAN OF PUBLIC RECORDS:

Linda Lambert, Communications/ Public Records Associate, 215 Manatee Avenue W. Bradenton, Florida, 34205
(941) 708-8770 lambertl@manateeschools.net

25. **Entire Agreement:** The proposal and this agreement constitutes the entire agreement between the parties and supersedes all prior agreements or representations, whether written or oral, concerning its subject matter. This agreement may be executed in one or more counterparts, each of which will be deemed an original and all of which will constitute one and the same instrument. The terms of this agreement will supersede any conflicting terms in any counterpart, exhibit or attachment. No modification, amendment, or waiver of any provision of this agreement will be effective unless in writing and signed by both parties. Notice is by writing sent certified mail.

26. **Authority to Execute:** The individual executing this Agreement on behalf of the Contractor is duly and fully authorized to execute this Agreement on behalf of the Contractor and to bind the Contractor to each and every, condition and covenant of the Contract Documents.

SIGNATURES:

CONTRACTOR

Signature	8-4-20 Date
LUKE RUSSELL Type or Print Name	VICE PRESIDENT Title
PLAYMORE WEST, INC. Business/Company Name	239 791 2400 Phone
10271 DEER RUN FARMS RD., SUITE 1 Address	239 791 2401 Fax
FT. MYERS, FL 33966 City, State, Zip	info@playmoreonline.com Email

SCHOOL DISTRICT OF MANATEE COUNTY

Mitchell Teitelbaum Legal Counsel	9/2/2020 Date
Superintendent	Date

SCHOOL BOARD

Gina Messenger Gina Messenger (Sep 3, 2020 10:12 EDT) Board Chair	9/3/2020 Date

ADDENDUM A

CONTRACTOR INFORMATION FORM

SUPPLIER NAME: Playmore West, Inc.

TELEPHONE NUMBER: –

LIST EMPLOYEE(s) THAT WILL BE DOING WORK FOR THE SCHOOL DISTRICT OF MANATEE COUNTY: Please print clearly and duplicate form as needed. Please list badge expiration for all employees who currently have a contractor's badge. If a designated employee does not have a contractor's badge, indicate their Appointment Date and Time for fingerprinting.

Please reference the District website for JLA requirements: https://www.manateeschools.net/ Page/6689

Last Name, First Name	Contractor/JLA Badge Expiration	Fingerprint Appt Date/Time

~~SUPPLIERS MUST HAVE A VALID JLA BADGE TO PERFORM SERVICES ON SCHOOL CAMPUS.~~		
SUPPLIERS WITH NO BADGE, MUST BE ESCORTED ON AND OFF CAMPUS AND SUPERVISED WHILE RENDERING SERVICES.		

Contractor/Vendor Disqualifiable Offenses:

- Any offense listed in s. 943.0435 (1)(a) 1., relating to the registration of an individual as a sexual offender.
- Section 393.135, relating to sexual misconduct with certain developmentally disabled clients and the reporting of such sexual misconduct.
- Section 394.4593, relating to sexual misconduct with certain mental health patients and the reporting of such sexual misconduct.
- Section 775.30, relating to terrorism.
- Section 782.04, relating to murder.
- Section 787.01, relating to kidnapping.
- Any offense under chapter 800, relating to lewdness and indecent exposure.
- Section 826.04, relating to incest.
- Section 827.03, relating to child abuse, aggravated child abuse, or neglect of a child.

NOTICE OF INTENT TO AWARD

BID ON PARK AND PLAYGROUND EQUIPMENT, MCSD No. 21-0053-MR

CONTRACT PERIOD: SEPTEMBER 1, 2020 THROUGH AUGUAST 31, 2023

BOARD APPROVED ON AUGUST 25, 2020

TABULATION OF BIDS ON PARK AND PLAYGROUND EQUIPMENT, MCSD No. 21-0053-MR

Bids Due: 3:00 p.m., July 22, 2020

BIDDERS:	ITEM 1: PLAYGROUND EQUIPMENT		
	Catalog Name	Number	Discount
A&B Management Group, Inc. dba Southern Park and Play Systems	SRP Components	2020	5%
	SportsPlay	2018	5%
	Superior Recreation	2019 (1)	5%
	Athletic Connection	2020	5%
	Bison	2020-21	5%
	Jaypro	2019-2020 (2)	5%
	Hadar Athletic	2014	5%
Advanced Recreational Concepts	Playcraft Systems	1	2%
	R3/Grounds for Play	2	2%
	UltraPlay	3	2%
	Id Sculpture	4	2%
	Childforms	5	2%
	Playtopia	6	2%
	Freenotes Harmony	7	2%
	SRP Parts	9	2%
	SportsPlay	10	2%
	Dynamo	20	2%
Apollo Sunguard Systems, Inc.	No Bid	No Bid	No Bid
Bliss Products and Services, Inc.	Play and Park Structures	44	10%
	Big Toys	33	5%
	UltraPlay	X	5%
	Freenotes Harmony	19	5%
	Snug Play	X	5%
	Sportsplay	X	5%
	Elephant Play	X	5%
Creative Shade Solutions	No Bid	No Bid	No Bid
Industrial Shadeports, Inc.	Industrial Shadeports	2020	10%
Kompan, Inc.	Kompan US Price List		9%

TABULATION OF BIDS ON PARK AND PLAYGROUND EQUIPMENT, MCSD No. 21-0053-MR

Bids Due: 3:00 p.m., July 22, 2020

BIDDERS:	ITEM 1: PLAYGROUND EQUIPMENT		
	Catalog Name	Number	Discount
Lanier Plans, Inc. dba Korkat	SRP - Superior Play	2020	5%
	SRP - Superior Play Components	2020	5%
	SRP - Grounds for Play	2020	5%
	SRP - Freenotes Harmony Park	2020	5%
	Big Toys	2020	5%
	Dynamo	2020	5%
McTEOR Education, LLC	Kidstuff Playsystems	1005	ADD 34% (15)
Miller Recreation Equipment & Design, Inc./Miracle Recreation Equipment, CC	Miracle Recreation Equipment Company	2020	8% (21)
			12% (21)
			15% (21)
			18% (21)
			20% (21)
	Bleachers		10% (22)
	UPC Parks		5%
	Action Play Systems		5%
PlayCore Wisconsin DBA Game Time	Game/Time	2020	10%
Playmore West, Inc.	Playworld	2020	5%
	Berliner	2020	3%
Playspace Services, Inc.	Playcraft Systems	1	Install Only
	R3/Grounds for Play	2	Install Only
	UltraPlay	3	Install Only
	Id Sculpture	4	Install Only
	Childforms	5	Install Only
	Playtopia	6	Install Only
	Freenotes Harmony	7	Install Only
	SRP Parts	8	Install Only
	Sports Play	10	Install Only
	Dynamo	20	Install Only
Playpower LT Farmington, Inc.	Little Tikes Commercial	2020	25% (25)(26)
	Little/Tikes Commercial	2020	5% (26)(27)

TABULATION OF BIDS ON PARK AND PLAYGROUND EQUIPMENT, MCSD No. 21-0053-MR

Bids Due: 3:00 p.m., July 22, 2020

BIDDERS:	ITEM 1: PLAYGROUND EQUIPMENT Catalog Name	Number	Discount
Project Innovations, Inc.	Jambette Play Ground Equipment.com Kids Pro Surf Turf & Play Pad	2019 - 20 Volume 2 Project Innovations	4% 10% 5%
Rep Services. Inc.	Landscape Structures, Inc.		3%
Superior Park Systems, Inc.	Adventure Playground Systems Kidstuff Playsystem Childforms Childforms	Playground & Park Design Catalog # 1005 Volume 12 Sales Brochure	3% 3% 3% 3%
Swartz Associates, Inc.	Henderson Recreation Action Play Systems	2020 Price List 2020 Price List	6% 10%
Top Line Recreation, Inc.	BCI Burke	01	5%
Varsity Sports dba BSN Sports, LLC (42)	BSN Sports Equipment	20-57307	10%

TABULATION OF BIDS ON PARK AND PLAYGROUND EQUIPMENT, MCSD No. 21-0053-MR

Bids Due: 3:00 p.m., July 22, 2020

BIDDERS:	ITEM 2: SITE EQUIPMENT Catalog Name	Number	Discount
A&B Management Group, Inc. dba Southern Park and Play Systems	Pilot Rock Ultra Site Ultra Play Polly Products Stern Williams Superior Site Amenities	260 - 2019 2020 2020 2019 2020 2020	5% 5% 5% 5% 5% 5%
Advanced Recreational Concepts	Ultrasite SRP Amenities Paris Fitness and Amenities ActionFit Bison The Park Catalog JayPro NRS Bleachers Kay Park	11 12 13 14 15 theparkcatalog.com 16 19 21	2% 2% 2% 3% 3% 2% 3% 3% 2%
Apollo Sunguard Systems, Inc.	No Bid	No Bid	No Bid
Bliss Products and Services, Inc.	Ultrasite Superior Jayhawk Plastics/Frog Furnishings Doty & Sons Concrete Products Grimson Poolside Action Fit Bark Park	33	5% 5% 5% 5% 5% 5% 5%
Creative Shade Solutions	No Bid	No Bid	No Bid
Industrial Shadeports, Inc.	Industrial Shadeports	2020	10%
Kompan, Inc.	TPP Price List		5%

TABULATION OF BIDS ON PARK AND PLAYGROUND EQUIPMENT, MCSD No. 21-0053-MR

Bids Due: 3:00 p.m., July 22, 2020

BIDDERS:	ITEM 2: SITE EQUIPMENT		
	Catalog Name	Number	Discount
Lanier Plans, Inc. dba Korkat	SRP - Superior Amenities	2020	5%
McTEOR Education, LLC	Kidstuff Playsystems	1005	ADD 34% (15)
Miller Recreation Equipment & Design, Inc./Miracle Recreation Equipment, CC	Miracle Recreation Equipment Company	2020	5%
	Douglas Industries		5%
	Bison Sports		5%
	Kay Park		5%
	Wabash Valley		5%
	Foresite Designs		5%
	Murdock Fountains		5%
	Most Dependable Fountains		5%
	RGP Shelters		5%
	Coverworx Shelters		5%
	DogiPot (Pet Stations)		5%
PlayCore Wisconsin DBA Game Time	GT Site	2020	5%
	Ultra Site	2020	5%
Playmore West, Inc.	Wabash Valley	2020	5%
Playspace Services, Inc.	Ultrasite	11	Install Only
	SRP Amenities	12	Install Only
	Paris Fitness and Amenities	13	Install Only
	ActionFit	14	Install Only
	Bison	15	Install Only
	The Park Catalog	theparkcatalog.com	Install Only
	JayPro	16	Install Only
	NRS Bleachers	19	Install Only
	Kay Park	21	Install Only
Playpower LT Farmington, Inc.	Little Tikes Commercial	2020 (29)	5% (30)

TABULATION OF BIDS ON PARK AND PLAYGROUND EQUIPMENT, MCSD No. 21-0053-MR

Bids Due: 3:00 p.m., July 22, 2020

BIDDERS:	ITEM 2: SITE EQUIPMENT Catalog Name	Number	Discount
Project Innovations, Inc.	Play Ground Equipment.com Frog Furnishings	Volume 2 2018	10% 3%
Rep Services, Inc.	DuMor Site Furnishings		3%
Superior Park Systems, Inc.	Superior Amenities Kay Park Recreation Adventure Site Amenities	2020 Catalog 2020 Catalog Playground & Park Design Guide	2% 2% 2%
Swartz Associates, Inc.	Sitescapes, Inc. Kay Park Recreation Ultra Site Frog Furnishings Vista Furnishings Superior Site Amenities Blue Valley Industries Jaypro Sports National Recreation Systems MyTCoat	2020 Price List 2020 2020 Price List 2020 Price List 2020 Price List 2020 Price List 2020 Price List 2020 2020 Price List 2020 Price List	5% 6% 8% 8% 5% 8% 5% 7% 6% 8%
Top Line Recreation, Inc.	Premier Polysteel	02	3%
Varsity Sports dba BSN Sports, LLC (42)	BSN Sports Equipment	20-57307	10%

TABULATION OF BIDS ON PARK AND PLAYGROUND EQUIPMENT, MCSD No. 21-0053-MR

Bids Due: 3:00 p.m., July 22, 2020

BIDDERS:	ITEM 3: SHADE STRUCTURE		
	Catalog Name	Number	Discount
A&B Management Group, Inc. dba Southern Park and Play Systems	Fiberbuilt	2019	5%
	Superior Shade	Volume 11	5%
	SkySpan	2020	5%
Advanced Recreational Concepts	SRP Shade	17	5%
	Ultra Shade	18	5%
	Ball Fabrics	ballfabrics.com	1%
	IGON Shelters	22	5%
	Cedar Forest Products	23	5%
	RGP Shelter	24	5%
	SRP Shelter	25	5%
Apollo Sunguard Systems, Inc.	Apollo Sunguard	2019	8% (6)
Bliss Products and Services, Inc.	Shade Systems		5%
	Shade America		5%
	Ultra Shade		5%
	Ultra Shelter		5%
	Cedar Forest		55%
	USA Shade		5%
	Superior		5%
Creative Shade Solutions	Creative Shade (10)	1	15%
Industrial Shadeports, Inc.	Industrial Shadeports	2020	10%
Kompan, Inc.	TPP Price List		4%

TABULATION OF BIDS ON PARK AND PLAYGROUND EQUIPMENT, MCSD No. 21-0053-MR

Bids Due: 3:00 p.m., July 22, 2020

BIDDERS:	ITEM 3: SHADE STRUCTURE Catalog Name	Number	Discount
Lanier Plans, Inc. dba Korkat	SRP - Superior Amenities	2020	5%
McTEOR Education, LLC	Kidstuff Playsystems	1005	ADD 34% (15)
Miller Recreation Equipment & Design, Inc./Miracle Recreation Equipment, CC	USA Shade	2020	5%
PlayCore Wisconsin DBA Game Time	GT Shade	2018 / 2020	5%
Playmore West, Inc.	USA Shade Shade Systems Apollo Sunguard Superior Shelters	2020 2020 2020 2020	3% 3% 3% 3%
Playspace Services, Inc.	SRP Shade Ultrashade Ball Fabrics ICON Shelters Cedar Forest Products RCP Shelter SRP Shelter	17 18 ballfabrics.com 22 23 24 25	Install Only Install Only Install Only Install Only Install Only Install Only Install Only
Playpower LT Farmington, Inc.	Little Tikes Commercial	2020 (31)	5% (32)

TABULATION OF BIDS ON PARK AND PLAYGROUND EQUIPMENT, MCSD No. 21-0053-MR

Bids Due: 3:00 p.m., July 22, 2020

BIDDERS:	ITEM 3: SHADE STRUCTURE Catalog Name	Number	Discount
Project Innovations, Inc.	Pro Shade	Project Innovations, Inc.	3%
Rep Services, Inc.	SkyWays Shades USA Shade Porter Corp		3% 3% 3%
Superior Park Systems, Inc.	Shade Systems, Inc. Adventure Shade Structures	Product Catalog Playground & Park Design Guide	3% 3%
Swartz Associates, Inc. (37)	Ultra Shade Ultra Shelter	2020 Price List 2020 Price List	4% 4%
Top Line Recreation, Inc.	Shade System, Inc. Americana	03 04	5% 5%
Varsity Sports dba BSN Sports, LLC	BSN Sports Equipment	20-57307	10%

TABULATION OF BIDS ON PARK AND PLAYGROUND EQUIPMENT, MCSD No. 21-0053-MR

Bids Due: 3:00 p.m., July 22, 2020

BIDDERS:	ITEM 4: SURFACING MATERIALS Catalog Name	Number	Discount
A&B Management Group, Inc. dba Southern Park and Play Systems	Garick	2020-21 Quotation	5%
Advanced Recreational Concepts	Rubber Designs Playspace ADA Wood Mulch	8 per regional supplier	5% (3) 5% (4)
Apollo Sunguard Systems, Inc.	No Bid	No Bid	No Bid
Bliss Products and Services, Inc.	Safety 1st Wood Mulch Products Xgrass Zeager Fibar East Coast Mulch IMC Outdoor		5% 5% 5% 5% 5% 5% 5%
Creative Shade Solutions	No Bid	No Bid	No Bid
Industrial Shadeports, Inc.	Industrial Shadeports	2020	10%
Kompan, Inc.	Fibar EWF Turf Surfacing PIP Surfacing Rubber Safety Tiles Rubber Mulch		4% 4% 4% 4% 4%

TABULATION OF BIDS ON PARK AND PLAYGROUND EQUIPMENT, MCSD No. 21-0053-MR

Bids Due: 3:00 p.m., July 22, 2020

BIDDERS:	ITEM 4: SURFACING MATERIALS Catalog Name	Number	Discount
Lanier Plans, Inc. dba Korkat	Outdoor Safety Surfacing		5%
McTEOR Education, LLC	Kidstuff Playsystems	1005	ADD 34% (15)
Miller Recreation Equipment & Design, Inc./Miracle Recreation Equipment, CC	Rubber Recycle (Shredded Rubber) Fibar Systems (EWF) Forever Lawn (Artificial Turf) NoFault (Poured in Place Surfacing) Durable Lawn (Artificial Turf)		5% 5% 5% 5% 5%
PlayCore Wisconsin DBA Game Time	GT Impax	2020	5%
Playmore West, Inc.	Robertson TOT Turf No Fault X Grass Forever Lawn Mulch & Soil, Co. Zeager		3% 3% 3% 3% 3% 3%
Playspace Services, Inc.	Rubber Designs Playspace ADA Wood Mulch	8 Per Regional Supplier	5% (24) 5% (25)
Playpower LT Farmington, Inc.	No Fault	N/A	5% (33)

TABULATION OF BIDS ON PARK AND PLAYGROUND EQUIPMENT, MCSD No. 21-0053-MR

Bids Due: 3:00 p.m., July 22, 2020

BIDDERS:	ITEM 4: SURFACING MATERIALS		
	Catalog Name	Number	Discount
Project Innovations, Inc.	Kids Pro Surf Turf & Play Pad	Project Innovations, Inc.	5%
Rep Services, Inc.	Forever Lawn VitriTurf No Fault Sports Group iMulch Irvine		3% 3% 3% 3% 3%
Superior Park Systems, Inc.	Forever Lawn Forever Lawn	Product Catalog Playground Grass	3% 3%
Swartz Associates, Inc.	Foresty Resources Cowart & Mulch IMC Outdoor Pierecton Rubber Products	2020 Price List 2020 Price List 2020 Price List 2020 Price List	10% 10% 6% 5%
Top Line Recreation, Inc.	No Bid	No Bid	No Bid
Varsity Sports dba BSN Sports, LLC (42)	BSN Sports Equipment	20-57307	10%

TABULATION OF BIDS ON PARK AND PLAYGROUND EQUIPMENT, MCSD No. 21-0053-MR

Bids Due: 3:00 p.m., July 22, 2020

BIDDERS:	ITEM 5: INSTALLATION OF PLAYGROUND EQUIPMENT, SITE EQUIPMENT, SHADE STRUCTURE AND SURFACING MATRERIAL Installer/Sub Contractor Name	Percentage Mark up
A&B Management Group, Inc. dba Southern Park and Play Systems	Ultimate Attitude, LLC Southern Park and Play Systems	30% 20%
Advanced Recreational Concepts	Playspace Services - playgrounds Playspace Services - Shade Install Playspace Services - Site Furnishings Playspace Services - Safety Surfacing Playspace Services - Shelters	37% 49% 75% *(5) 69%
Apollo Sunguard Systems, Inc.	Cocozza Construction & Consulting Dragon Recreation Services Someson Homes The Best of Southwest Framing	75% 75% 75% 75%
Bliss Products and Services, Inc.	Bliss Products Shady Surfacing Jammin Playgrounds Complete Construction Premier Recreation Stewart Tennis	50% (7)(8) 50% (7)(8) 50% (7)(8) 50% (7)(8) 50% (7)(8) 50% (7)(8)
Creative Shade Solutions	Creative Shade (10)	50% (11)
Industrial Shadeports, Inc.	Industrial Shadeports	130% (41)
Kompan, Inc.	Precision Playgrounds, Inc.	30% - 100% (12)(13)

TABULATION OF BIDS ON PARK AND PLAYGROUND EQUIPMENT, MCSD No. 21-0053-MR

Bids Due: 3:00 p.m., July 22, 2020

BIDDERS:	ITEM 5: INSTALLATION OF PLAYGROUND EQUIPMENT, SITE EQUIPMENT, SHADE STRUCTURE AND SURFACING MATRERIAL Installer/Sub Contractor Name	Percentage Mark up
Lanier Plans, Inc. dba Korkat	Lanier Plans, Inc. dba KorKat	35%
MeTEOR Education, LLC	Kidstuff Playsystems - Play Equipment Kidstuff Playsystems - Safety Surfacing Kidstuff Playsystems - Shade Structures	50% (16) (19) 60% (16) (17) (19) 100% (18) (19)
Miller Recreation Equipment & Design, Inc./Miracle Recreation Equipment, CC	Ryan's Maintenance	27%
PlayCore Wisconsin DBA Game Time	John Fitzgerald, Inc. Playground Equipment Site Amenities Shade	No Bid 30% 30% 30%
Playmore West, Inc.	Playmore West, Inc. - Playground Equipment Playmore West, Inc. - Site Equipment Playmore West, Inc. - Shade Structures Playmore West, Inc. - Surfacing (23)	32% 32% 180% 100%
Playspace Services, Inc.	Playspace Services - Playgrounds Playspace Services - Shade Install Playspace Services - Site Furnishing Playspace Services - Safety Surfacing Playspace Services - Shelters	37% 49% 75% *(26) 69%
Playpower LT Farmington, Inc.	Playworx Playsets LLC - Playground and Playground Parts Playworx Playsets LLC - Site Amenities Playworx Playsets LLC - Shade No Fault - Pour in Place Surface (34)	47% (34) 35% 100% 25%

TABULATION OF BIDS ON PARK AND PLAYGROUND EQUIPMENT, MCSD No. 21-0053-MR

Bids Due: 3:00 p.m., July 22, 2020

BIDDERS:	ITEM 5: INSTALLATION OF PLAYGROUND EQUIPMENT, SITE EQUIPMENT, SHADE STRUCTURE AND SURFACING MATRERIAL Installer/Sub Contractor Name	Percentage Mark up
Project Innovations, Inc. (36)	Project Innovations-Playground Equipment Project Innovations-Pro Shades Project Innovations-Kids Pro Suft Turf & Play Pad Project Innovations-Frog Furnishings	38% 80% *(35) 60%
Rep Services. Inc.	Johnny Pitts Construction Al Bosgraaf and Sons, Inc.	85% 85%
Superior Park Systems, Inc.	FFG Development and Construction Sports Systems International, Inc. Hurley Construction Superior Park Systems, Inc. Easygreens Forever lawn	100% 100% 100% 100% 100% 100%
Swartz Associates, Inc.	Kennico, Inc. Rida Group Construction	34% - 110% (38)(39) 34% - 110% (38)(39)
Top Line Recreation, Inc.	Hurley Construction, Inc. Al Bosgraaf & Sons, Inc.	36% 36%
Varsity Sports dba BSN Sports, LLC (42)	No Bid	No Bid

TABULATION OF BIDS ON PARK AND PLAYGROUND EQUIPMENT, MCSD No. 21-0053-MR

Bids Due: 3:00 p.m., July 22, 2020

BIDDERS:	ITEM 6: REPAIRS HOURLY RATE-PER HOUR	ITEM 7: PERCENTAGE MARK UP FOR REPAIR MATERIAL	
A&B Management Group, Inc. dba Southern Park and Play Systems	$150.00	No Bid	Digital Catalogs
Advanced Recreational Concepts	$197.50	30%	Digital Catalogs
Apollo Sunguard Systems, Inc.	No Bid	No Bid	Digital Catalogs
Bliss Products and Services, Inc.	$250.00 (9)	25% (9)	Printed Catalogs
Creative Shade Solutions	$125.00	10%	Digital Catalogs Printed Catalogs
Industrial Shadeports, Inc.	$265.00	15%	Digital Catalog
Kompan, Inc.	$200.00	*(14)	Digital Catalog Printed Catalogs

TABULATION OF BIDS ON PARK AND PLAYGROUND EQUIPMENT, MCSD No. 21-0053-MR

Bids Due: 3:00 p.m., July 22, 2020

BIDDERS:	ITEM 6: REPAIRS HOURLY RATE-PER HOUR	ITEM 7: PERCENTAGE MARK UP FOR REPAIR MATERIAL	
Lanier Plans, Inc. dba Korkat	$75.00	35%	Digital Catalog
McTEOR Education, LLC	$75.00 (20)	20% (20)	Digital price list/ No cata
Miller Recreation Equipment & Design, Inc./Miracle Recreation Equipment, CO	$150.00	0%	No Catalog
PlayCore Wisconsin DBA Game Time	$100.00	10%	Printed Catalogs
Playmore West, Inc.	$125.00	30%	Digital Catalog Printed Catalogs
Playspace Services, Inc	$197.50	30%	Digital Catalog with inst.
Playpower LT Farmington, Inc.	$100.00	25%	Printed Catalogs

TABULATION OF BIDS ON PARK AND PLAYGROUND EQUIPMENT, MCSD No. 21-0053-MR

Bids Due: 3:00 p.m., July 22, 2020

BIDDERS:	ITEM 6: REPAIRS HOURLY RATE-PER HOUR	ITEM 7: PERCENTAGE MARK UP FOR REPAIR MATERIAL	
Project Innovations, Inc.	$400.00	45%	Digital Catalog Printed Catalogs
Rep Services, Inc.	No Bid	No Bid	Printed Catalogs
Superior Park Systems, Inc.	$285.00	30%	Printed Catalogs
Swartz Associates, Inc.	$200.00 (40)	No Bid	No Catalogs
Top Line Recreation, Inc.	$350.00	30.00%	Digital Catalog
Varsity Sports dba BSN Sports, LLC (42)	No Bid	No Bid	No Catalogs

TABULATION OF BIDS ON PARK AND PLAYGROUND EQUIPMENT, MCSD No. 21-0053-MR

Bids Due: 3:00 p.m., July 22, 2020

NOTES:
(1) Open Market/Playgrounds
(2) Allsport/2020 Athletic Eqpn
(3) or discounts applied in catalog
(4) per discount applied in Playspace catalog
(5) Discounts included in Playspace/Rubber Designs catalog
(6) See attached copy of price list
(7) This does not include any site prep, permitting or concrete work. Shelter and shade foundations will be additional. Some vendors offer a delivered and installed price which will be discounted appropriately in the product discount. Site work and concrete including foundations will be priced per job. Sport court construction priced per job.
(8) Only Big Toys and Play and Park Structures require installer certification
(9) Rental Equipment Mark Up will be 10% as allowed on Page 12
(10) 2020 Manatee Schools Catalog
(11) Shade Price
(12) 30% Equipment, 60% Site Equipment, Shade 100%
(13) Mat Installation is based upon each unit - $35.00 per unit
Border Installation is based upon each unit - $15.00 per unit
Pour in Place Pricing and Turf includes installation
EWF installation is based on cubic yard - $16 per cubic yd
Rubber Tile Installation is based upon square footage - $3 per sq. ft.
Rubber Mulch Installation is based upon square footage - $10.00 per sq. ft.
(14) Markup for Repair Materials: Repair materials would be Kompan Spare Parts. Kompan has over 65,000 spare parts for current product lines as well as past product lines. Each part has a retail price and includes all markups. We would be happy to provide a Parts Price List in electronic format, if SDMC would like to view the list.
(15) Sell Price + (ADD) %
(16) Minimum $3500.00
(17) 60% of safety surfacing cost
(18) 100% of shade structure cost
(19) Please note all items may be negotiated for a particular job
(20) Kidstuff Playsystems will only service equipment manufactured by Kidstuff Playsystems, Olympic Recreation or Recreation Creations, LLC.
(21) 8% $0000 - $4999
12% $5000 - $9999
15% $10000 - $14999
18% $15000 - $24999
20% $25000 - Above Discount does not include freight, specials/sales flyer, parts
(22) Bleachers Discount does not include freight, specials/sales flyer, parts
(23) Engineered Wood Fiber

TABULATION OF BIDS ON PARK AND PLAYGROUND EQUIPMENT, MCSD No. 21-0053-MR

Bids Due: 3:00 p.m., July 22, 2020

NOTES:
(24) or per discounts applied in catalog
(25) per discount applied in Playspace catalog
(26) Discounts included in Playspace/Rubber Designs Catalog
(27) Off Playgrounds Sets - Excludes Tot Builders, Custom Design Studio, Early Childhood Clever Climbers and Tot Tree
(28) Off Parts
(29) Pages 182 to 185
(30) off site amenities
(31) Pages 186 and 187
(32) Off Shade
(33) pff Safety Surface (PIP)
(34) Which equates to 35% of equipment list price before discount
(35) Included in Price
(36) Permits/Signed & Sealed Engineered Drawings not included. Prices TBD per Project
(37) Note: Prepay + Add Freight for all manufacturers. Any permitting requirements and costs (if applicable) will incur an additional fee.
(38) Playground Equipment - 34%
Site Equipment - 35%
Shade Structure - 110%
Surfacing Materials
Forestry Resources - 60%
Cowart Mulch - 60%
IMC Outdoor - 40%
Pierection Rubber Products 40%
(39) Prepay & Add freight for all manufacturers
(40) $900.00 Minimum charge for installation
(41) Industrial Shade Port manufactures and installs our own equipment
(42) BSN Sports Exceptions to percentage off bid Spring 2020 catalog-see list

Failure to file a protest within the time prescribed in section 120.57(3), Florida Statutes, or failure to post the bond or other security required by law within the time allowed for filing a bond shall constitute a waiver of proceedings under chapter 120, Florida Statutes.

Requisition PRNM-500730-22

Requisitioning BU	PRNM: Natural and Marine Resources	**Requisition Amount**	99,958.71 USD
Entered By	Amy Honey	**Justification**	
Status	Approved	**Funds Status**	Reserved
Description	Piggyback Manatee County School District- Barney Browning Playground		
Emergency Requisition	No		

Attachments

Title	File Name or URL	Description
Manatee Schools 21-0053-MR_Tab	Manatee Schools 21-0053-MR_Tab.pdf	
Manatee Schools 21-0053-MR_Con	Manatee Schools 21-0053-MR_Contract.pdf	
APPROVED COI-GL-AUTO-WC FOR Pl	APPROVED COI-GL-AUTO-WC FOR Playmore West Inc. for Barney Browning Park Playground.pdf	
BARNEY BROWNING PLAYGROUND.pdf	BARNEY BROWNING PLAYGROUND.pdf	

Lines

Line	Item	Description	Category Name	Quantity	UOM	Price	Amount (USD)	Status	Funds Status
1		Piggyback Manatee County School District- Barney Browning Playground	650.18 Combination Sets, Playground			USD	99,958.71	Approved	Reserved

Requester	Amy Honey	**Supplier**	Playmore West, Inc
Urgent	No	**Supplier Site**	Order/Remit
Requested Delivery Date	2/7/22	**Supplier Contact**	Luke Russell
Deliver-to Location	Ed Ball 4th Floor Charge	**Contact Phone**	
Deliver-to Address	214 North Hogan Street, 4th Floor, Jacksonville, FL 32202, Duval, United States	**Charge Account**	11101.174103.583052.010291.00000000.00000.0000000
Note to Buyer			

I CERTIFY THAT FUNDS FOR THIS PURCHASE WERE AUTHORIZED AND PROVIDED FOR IN THE CURRENT BUDGET.