Docusign Envelope ID: 60661BB5-1D7D-42A4-B200-38CACBEC3886

City of Jacksonville, Florida

Procurement Award Form (PAF)

Part 1 – Form Type: JPAC 126.204 (a) New Award, Renewals, Waive Technical Defects, Price Increases, NTE Increases.

Goods and/or Services: Purchase of Fire Interceptor Boat with Master Trailer

Requested Action and Justification:

Recommend approval to reject Nassau Trading Inc., for failure to supply a complete specification for comparison as required in the bid specifications. Recommend approval to award the lowest responsive, responsible supplier, AD4K LLC in the amount of $315,880.00. Period of service is date of award through September 30, 2026.

Supplier:	AD4K LLC	**Basis of Award:**	LPTA	**BID Opening Date:**	04/07/2026

POA #:	N/A	**PO #:**	N/A	**Change Order #:**	N/A
Solicitation #:	ITB 17646 26	**Contract #:**	N/A	**Contract ADM #:**	N/A
Term:	One Time Project	**Options:**	0	**Options Used:**	0

Federally Funded:	No	**JSEB Rec:**	Encouragement
Licenses Verified:	N/A	**JSEB %:**	0
Bonds Required:	No	**Bonds Waived Pursuant To:**	N/A

Fund:	51102	**Center:**	114001	**Acct:**	564010	**Proj:**	000000	**Activity:**	00000499	$ 315,880.00
Fund:		**Center:**		**Acct:**		**Proj:**		**Activity:**		$
Fund:		**Center:**		**Acct:**		**Proj:**		**Activity:**		$

New NTE/GMP:	$ 315,880.00	**Contingent Amt:**	$ 0	**DMP/ODPO Amt:**	$ 0

Using Agency/BU:	ASFM:FLEET MANAGEMENT		
Concurrence:	Signed by: SE8462FE2C3E44F...	**Title:**	FLEET MANAGEMENT ADMINISTRATOR 4/29/2026
Concurrence:	9B60722B731B427...	**Title:**	CHIEF OF FLEET MANAGEMENT 5/4/2026
Concurrence:		**Title:**	
Concurrence:		**Title:**	

Procurement Analyst/Buyer:	Signed by: Ruth Keith C58E7E28D7654E9...	**Chief of Procurement:**	Signed by: B10F1D517352456... 5/5/2026
Name:	Ruth Keith	**Name:**	Dustin L. Freeman

Part 2 – JPAC Action: All award actions subject to lawfully appropriated funds.		**Part 3 – Final Awarding Authority Action:**	
Members who approve:		**Action:**	
Members who disapprove:		**Signature:**	
Date:		**Date:**	

Docusign Envelope ID: 60661BB5-1D7D-42A4-B200-38CACBEC3886

PAF Instructions
Part 1 (using agency)

Form Type: This form will be used for both Administrative Awards and JPAC Requests. Select type from dropdown options.

Goods and/or Services: Enter a brief description of the types of goods and services included in the request.

Requested Action and Justification: Enter a brief description of the requested action or authority being sought. i.e.; *Request permission to award the lowest, responsive responsible bidder for an ITB or award the highest ranked supplier for an RFP.* This block should also be used for additional information such as additional 4th account strings, or other information essential for contract execution.

Supplier: Enter awarded supplier name**.** If multiple, include in "Requested Action and Justification" box.

Basis of Award: Select from Lowest Price Technical Acceptable (LPTA), Highest Price Technical Acceptable (HPTA) or N/A.

Bid Opening Date: The date bids were unsealed by Procurement.

POA #: This is your 1Cloud generated Agreement number. Select Type, Enter Number.

PO #: Enter the PO number or agreement release number.

Change Order #: Provide the applicable change order number represented by this request.

Solicitation #: Select Prefix type, Enter Number, and Year.

Contract #: This number should be the same as your POA number (unless procured prior to 2020)

Contract Amendment #: Provide the applicable amendment number represented by this request.

Term: Select the Period of Performance or Term for the initial period.

Options: Period of time for each renewal or option.

Options Used: Prior to this request, enter how many options were already used.

Federally Funded: Select yes or no from dropdown if Federal Funds will be used.

JSEB Rec: Select Encouragement or JSEB Set Aside Option.

JESB %: If JSEB Participation, enter the percentage.

Bonds Waived Pursuant to: Select option from Drop down.

Funding Sources: Fund/Center/Account/Project/Activity, all fields are required even if zeros.

New NTE/GMP: Enter the new total not to exceed amount. Note, this should match the contract maximum indebtedness, if applicable**.**

Contingent Amount: If your agency requests an allowance for unforeseen additional expenses, then specify the amount of your requested increase and new NTE that represents the contingency allowance. This is over and above any quote.

DMP/ODPO Account: Enter the Direct Materials Purchase/Owner Direct Purchase Order Account. Used mainly for CIP (Capital Improvement/Construction) Projects

Using Agency/BU: Select one from the dropdown list.

Concurrence: Using Agency internal routing requirements for Electronic Signatures (follow Proc Manual for threshold requirements)

Title: Title of person electronically signing form.

Attachments: Included any supplemental information to the Procurement Award Form. i.e.; *Scope of work, previous awards*.

**Any field where there is no data available, or no entry is required, either leave it blank or enter N/A. Any fields where there is known data, include for informational purposes. Any changes to an original award should contain the data that is being changed and any other relevant data required for JPAC review and approval.*

Docusign Envelope ID: 60661BB5-1D7D-42A4-B200-38CACBEC3886

U.S. Department of Homeland Security
United States Coast Guard

Commandant
United States Coast Guard

2703 MLK Jr. Ave, SE Stop 7501
Washington DC 20593-7501
Staff Symbol: CG-BSX-23
Email: MICapp@uscg.mil
Websites: uscgboating.org
Website: www.safeafloat.com

16765
June 25, 2021

Guillermo Hechevarria
Superformance MF Inc
2637 W 76 St
Hialeah FL 33016

Dear Guillermo Hechevarria:

This is in reference to your request for a Manufacturer Identification Code (MIC). Your company is assigned the following MIC:

AEK

Please complete and sign enclosure (1), the MIC verification form, and scan it and return by email (*the preferred method*), or return it to us by mail. **Also, please note that the regulations in 33 CFR §181.33(b) require you to notify this office if you change company ownership, name, or address**; failure to do this will subject you to the penalties in Title 46, United States Code, Section 4311.

You can access the USCG Boat Builder's Handbook at: http://uscgboating.org/regulations/boatbuilders-handbook.php. This handbook contains all of the information necessary for you to build compliant recreational boats. The regulations which prescribe the use of your company's MIC in the Hull Identification Numbers (HIN) appear in 33 CFR §181.23.

The Coast Guard Office of Auxiliary and Boating Safety, Recreational Product Assurance Branch believes you will find these materials to be beneficial. Please feel free to contact the office with any suggestions or questions you may have. You are also encouraged to visit our websites at: www.uscgboating.org and www.safeafloat.com.

Sincerely,

Kristopher Franklin

CWO Kristopher Franklin
Office of Auxiliary and Boating Safety
Recreational Boating Product Assurance Branch
United States Coast Guard
By direction of the Commandant

Enclosures
(1) MIC verification form
(2) Hull Identification Number (HIN) Sample

Docusign Envelope ID: 60661BB5-1D7D-42A4-B200-38CACBEC3886

MIC VERIFICATION FORM

COMMANDANT (CG-BSX-23)
US COAST GUARD

16765
June 25, 2021

Your company is assigned the following Manufacturer Identification Code:

AEK

Our records contain the following information concerning your company:
Is this information correct? ___ YES or ___ NO
If not, please make corrections in the spaces provided to the right.

Company Information	Current in USCG Database	Recommended Corrections
Company Official:	Guillermo Hechevarria	
Company Name:	Superformance MF Inc	
Company Name:		
Parent Company:		
Mailing Address:	2637 W 76 St	
City/State/Zip:	Hialeah/FL/33016	
Phone:	305-420-6034	
E-mail:	superformancemfg@gmail.com	
Website:	www.superformancejet.com	
Fax:		
Cell:		
Factory Information	IF DIFFERENT FROM MAILING ADDRESS -	(P.O. BOX NOT ACCEPTABLE):
Factory - Address, POC, & Phone:		

Additional comments:

SIGNATURE: _____ DATE: _____

NOTE: *If you have recently faxed or e-mailed updated information to us, you do not need to resend this form. If this information is correct, use this form to submit future changes of company contact information.*

Docusign Envelope ID: 60661BB5-1D7D-42A4-B200-38CACBEC3886

AD4K, LLC

Purchase of 10m (33') Fire Interceptor with Boat Master Trailer

ITB No.: 17646-26

AD4K, LLC
8306 Noble Vines Dr.,
Hoschton, GA 30519
UEI: DW2MG391FCJ6
CAGE: 9SCX3
POC: Ryan Woods
Phone #: +1 (332) 208-4278
Email: contracts@ad4k.us

Docusign Envelope ID: 60661BB5-1D7D-42A4-B200-38CACBEC3886

AD4K, LLC
Cage Code: 9SCX3
UEI: DW2MG391FCJ6
Com: +1 (332) 208-4278
DUNS: 088649184

TO: City of Jacksonville
Procurement Division
214 North Hogan Street, 8th Floor
Jacksonville, FL 32202

DATE: 30 March 2026

FROM: AD4K, LLC
8306 Noble Vines Dr.
Hoschton, GA 30519

SUBJECT: Offer Submission – ITB 17646-26 Purchase of 10m (33') Fire Interceptor with Boat Master Trailer

AD4K, LLC is pleased to submit its offer in response to **ITB 17646-26, Purchase of 10m (33') Fire Interceptor with Boat Master Trailer**. We appreciate the opportunity to provide the City of Jacksonville with our proposal for the required **10m (33') Fire Interceptor – Port Security and Emergency Response Vessel with trailer** in accordance with the solicitation requirements.

Our submission is based on a careful review of the solicitation documents, including the bid requirements, technical specifications, response instructions, and pricing requirements. AD4K, LLC understands that this procurement is for a one-time purchase, that bids must be submitted for the full quantity, and that award will be made on an all-or-none basis to the lowest responsive and responsible bidder, subject to the terms of the solicitation.

AD4K, LLC is submitting an offer for **Line 1 – Purchase of 10m (33') Fire Interceptor - Port Security and Emergency Response Vessel and Boat Master Trailer or Equivalent**, and our proposal includes the technical and supporting information necessary for the City's review. We understand that where a manufacturer's name or brand is referenced, sufficient product data must be provided to permit an intelligent comparison, and we have structured our submission accordingly.

We acknowledge the City's requirement that all items furnished be provided in accordance with the published specifications and contract terms, and we confirm that our offer is submitted in good faith, without collusion, and with the intent to fully comply with the solicitation requirements. We also understand that pricing is to include furnishing and delivery, and that prices are to remain in effect for 120 calendar days after bid opening as stated in the solicitation.

Our proposed vessel package is based on the Fire Interceptor 10M platform and related specifications included with the solicitation, including the required emergency response vessel configuration and trailer package.

Thank you for your consideration of our offer. AD4K, LLC appreciates the opportunity to support the City of Jacksonville. Should you require any additional information, clarifications, or supporting documentation as part of your evaluation, we stand ready to provide it through the proper procurement channel.

Respectfully Submitted,

Ryan Woods
Chief Executive Officer
AD4K, LLC

Docusign Envelope ID: 60661BB5-1D7D-42A4-B200-38CACBEC3886

AD4K, LLC
Cage Code: 9SCX3
UEI: DW2MG391FCJ6
Com: +1 (332) 208-4278
DUNS: 088649184

Superformance Phantom 33 Fire Interceptor (10M)

Port Security and Emergency Response Vessel

Section	Item	Specification / Description	Qty.
General / Hull	Vessel type	Superformance Phantom 33 Fire Interceptor (10M) – Port Security and Emergency Response Vessel	1
	Hull dimensions	32'10" x 8'6"	1
	Draft	22"	1
	Bottom plating	5/16" bottom	1
	Hull sides	3/16" hull sides	1
	Deck	3/16" non-skid plate	1
	Standards	ABS welding standards	1
	Standards	ABYC standards	1
	Standards	USCG CFR 46	1
	Bow protection	Push knee on bow with heavy duty rubber for head-on collision protection	1
	Hull warranty	Full Superformance Jet Boats Lifetime Hull Warranty	1
Superstructure	Wheelhouse	INT wheelhouse	1
	Cut parts for SS	Aluminum	400

Docusign Envelope ID: 60661BB5-1D7D-42A4-B200-38CACBEC3886

	Bend cabin to beams	Bending sub-purdys	1
	Erect superstructure	Erect superstructure	1
	Install interior framing	Install interior framing	1
	Weld superstructure	Welding wire	1
	Console hatches	From inside cuddy for elect. access; MCM metal hinges	2
	Port & stbd console	Design	1
	Head compartment in main cabin	As per FPS bomon door under fitout	1
Aluminum Sub-Assemblies	Seat boxes	Seat boxes	4
	Cuddy seat boxes P&S	Misc. metal	2
	Bow eye & stern tow eyes	Misc. metal, includes tow pendant 90	1
	Soft patches	Aluminum	2
	P&S bench seat boxes with storage	Misc. metal	2
	Fore and aft tow posts	4" sched 80 pipe	2
	Stern Chicago Klein grip	Supply only	1
	Aft deck fuel shutoffs hatch	Bomar	1
	Cleats	Welded 10"	6
	Handrails aft	Misc. pipe 1.5"	2
	Handrails roof outside cabin	Misc. pipe	2
	Handrails inside cabin	Misc. pipe; 2" main cabin, 2" cuddy	4
	Foredeck hand rails	Foredeck hand rails	2
	Anchor bracket	Brackets in bow locker & aft railing	1
	Anchor locker	Watertight hatch, Bomar plastic	1
	Lifting eyes	Engineered to safety margin	4
	Tie downs for trailer	For trailer	6
	Outboard guard	Misc. pipe	1
	Removable dive ladder	PIW ladder, see fitout	1
	QA and safety hours	QA and safety hours	1
Propulsion	Engine installation	Mercury SeaPro 300 HP	2
	Power steering system	Merc PS system	1
	Pre-rig kit	Merc pre-rig	1

Docusign Envelope ID: 60661BB5-1D7D-42A4-B200-38CACBEC3886

	Props	Props	2
	Controls	Controls	2
	Fluids	Machining costs	1
	QA & safety	Misc.	1
Bilge System	Bilge pumps	2000 GPM	2
	Installation hardware	Float switch	2
	Wiring and switches	Visual indicator lights	2
	Manual Whale Gusher pump	Built-in or portable	1
Alarms	Bilge alarm	Standard	1
	Bilge fume alarm	Locate in fuel tank space	1
	Whale manual bilge pump	Manual	1
Fuel Systems	Tanks	1 x 300 USG fuel tanks, 5086 FMT	1
	System install	Fuel fill/vent, fittings, hose, gauge	1
	Merc single filters	MERC steering	2
	Fuel shut off via deck hatch	Fuel shut off valves	3
	Fuel shut off deck hatch	Bomar 12" x 12"	1
Engine Controls	Controls	GSM	1
Steering Systems	Seastar steering	Cables / MERC steering	1
	Wheel	Edson Destroyer wheel	1
Seawater System	Intake	Groco vertical intake	1
Exhaust System	Exhaust system	Centeck fiberglass water lift muffler	1
	Transom connection	Elbows, clamps and hose; hose clamps etc.	1
Fresh Water / Sanitation	Freshwater tank	20 gallon freshwater poly tank; sink basin in cuddy with pump	1
	Black water tank	Not required	0
	Marine toilet electric	Uses fresh water tank for supply; macerator overboard	1
	Fresh water washdown / shower	Fresh water washdown / shower	1
HVAC	Cabin heating	High volume Flanar diesel heater with ducting to windshields	1
	Roof mount AC units	Dometic 1,500 BTU mount	2
Fire Suppression	Extinguishers	3 BC units	3

Docusign Envelope ID: 60661BB5-1D7D-42A4-B200-38CACBEC3886

	Fire pump and monitor	Darley @BE with TFT monitor (with camlock)	1
	QA & safety hours	QA & safety hours	1
Painting	Cabin beadblast	Blast	1
	Bottom and interior	Epoxy bottom and behind collar, includes sandblast and deck	1
	Prep	Vacuum, wash, chlorid, 2 extra costs	1
	Hull bottom	Sand	1
	Interior paint	Zolatone matte gray	1
	Decals	Decals	—
Interior Fit Out	Deck paint	Sandblasted deck	1
	Equipment installation	General	1
	Windows	AJR windows 2x520, 4x300, 2x5400; no spotter windows required; freight 400	1
	Heated windows	4 front	4
	Doors, dogged	AJR all sliding doors aft and P; includes freight	3
	Interior head door	Bomon interior door and exterior hatch door	2
	Cabin insulation kit	Pre-cut insulation kit; confirm fire retardant; Elastoproxy	1
	Bench seat cushions	Quinte canvas	2
	Roof or cuddy roof hatch	18–20" Bomar from inventory	1
	Helm / crew seats	Shock mitigating suspension seats with backs; Seats Inc.	4
	Rubber deck matting	NO Traxs interior	1
	Interior handrails	Interior handrails	—
	Exterior handrails	Exterior handrails	—
	Foam flotation	Norseman foam billets to meet NFPA 1925	1
	Deck plates	Viking	1
	Compartmentalization	To verify	1
Exterior Fit Out	Deck tie downs	Witchard SS tie downs	1
	Rubber flexible matting for storage compartments	Misc. flexible rubber matting	1
	Wing collar foam only	Wing 18" foam collar – grey	1
	Wing collar hybrid diver handles	Wing collar hybrid diver handles	1
	Hull anodes	10 lb aluminum anodes	6
	Dive ladder	Wynne stainless dive ladder with P&S sockets	1

Docusign Envelope ID: 60661BB5-1D7D-42A4-B200-38CACBEC3886

Electrical / DC Systems	Marine electrical installation	Meets ABYC	1
	Wire	Wire	1
	Wire labeling	Mechanical heatshrink wire labels	1
	D/C panel	Custom 12V battery panel	1
	Battery boxes	Boxes with brackets	8
	Battery selector switch	Blue Sea battery switches	3
	Battery isolators	Perfect Switch	2
	D/C outlets	12V DC receptacle	6
	House batteries	AGM house batteries	2
	Start batteries	27 series AGM	2
	Battery charger	Newmar PT-24-45U	1
	Cabin fans	Caframo	4
	Hull potential meter	With logger, download stick, and reference cell denoting corrosion	1
	Electrical distribution components	Busbars, terminal strips, waterlight connector, dbl pole switches, meters, etc.	1
AC Systems	Battery charger	Newmar 2 bank	1
	A/C panel	Blue Seas single shorepower breaker for shorepower and lockout misc.	1
	Shorepower inlet	Marinco	1
	Shorepower cord	Marinco 50 ft 30 Amp cordset	1
	Transformers	Victron	1
	ELCI	30 amp ELCI enclosure with reverse polarity indicator; ABYC required	1
	Generator	Westerbeke 5.5 KW	1
	Box lights	Panel & harness	1
Lighting	Bow lights	Panel & harness	1
	Pilothouse lighting	Red/off/white dome lights with main console switch	8
	Dimmer	Main console dimmer and low-level deck lighting dimmer	2
	Cabin lighting	4 main cabin, 1 head, and 2 cubby	7
	Deck lighting D/C	Superbright floods LED	3
	Low level deck lighting	Amber courtesy lights by steps	10
	Navigation lights	Hella LED navigation lights	4

Docusign Envelope ID: 60661BB5-1D7D-42A4-B200-38CACBEC3886

	Search light	GOlight Stryker	1
	EPIRB	ARC	1
	Windshield wiper	Imtra multi-speed self-parking pantograph	2
	Horn	Electric air horn trumpet, audible for 1 KM	1
Navigation Equipment	Compass	Ritchie 4" with deviation card	1
	Garmin cabling	Misc. cabling	1
	Monitor	Garmin 9" GPSMAP	2
	Radar	GMR 18XHD 4KW dome	1
	GPS antenna	Antenna	1
	Depthsounder module and transducer	Depthsounder	1
	Heading sensor	Heading sensor	1
	Networking hub	Misc. cables and connectors	1
Communication Equipment	Navigation chip	Navigation chip	1
	Radio VHF	ICOM 605	1
	VHF antenna	Shakespeare 5225XT	1
	AIS antenna	AIS antenna	1
	Antenna mounts	Shakespeare 4187-HD	2
	FLIR JCU joystick	FLIR JCU joystick	1
Miscellaneous	Delivery & commissioning	Inspection – 3 members, two trips	2
	Manuals	COTS	2
	Design	Design	1
	Misc. fasteners	316 stainless	1
	Review testing PDITs	Review testing PDITs	1
	Testing & trials builder	Fuel	1
	Delivery loading / shrink wrap	Protecall	1
	Training & delivery recommission	On site for 5 participants; 4 days commissioning and training	1
	Ground tackle	Danforth anchor / rode	1
	Labelling	Labelling	1
	Clean up hours	Clean up hours	1
	Lift ring	Non-ferrous metal brackets, MCM made	1

Docusign Envelope ID: 60661BB5-1D7D-42A4-B200-38CACBEC3886

	Safety gear	Misc.	1
	Backboard brackets behind bench seat	Backboard brackets behind bench seat	1
	Trailer	Loadrite with ladder, electric winch, etc.; loaded and adjusted to fit boat	1
	Boat hook	Brackets on side of house	1
	Liferaft	6-person valise type, inland	1
	Radar reflector	Panasonic top model	1

Standard Lead Time: 330 Days

Trailer	Trailer model	BoatMaster Trailer Model MC10M-21	1
	Axles	Triple axle	1
	Material	Aluminum	1
	Frame	I-beam	1
	Fenders	Diamond tread fenders	1
	Bunks	Marine grade pressure treated bunks	1
	Lighting	12V LED lights	1

Freight	Delivery freight	Trucking to Florida	1

Docusign Envelope ID: 60661BB5-1D7D-42A4-B200-38CACBEC3886

AD4K, LLC

Marine Vessel Manufacturing & Integrated Marine Systems

Authorized Distributor – Superformance Jet Boats LLC

COMPANY OVERVIEW

AD4K LLC is a U.S.-based manufacturer and authorized distributor of high-performance aluminum patrol vessels, trailers, and integrated marine systems supporting federal, state, and municipal maritime operations. The company delivers turnkey marine platforms designed for enforcement, fisheries, research, and public safety missions.

CORE COMPETENCIES

- Custom aluminum patrol vessel fabrication (all-aluminum construction)
- Turnkey propulsion integration (Mercury, Yamaha, Honda)
- Marine electrical system installation and protected wiring integration
- Specialty vessel systems for patrol, research, electrofishing, and survey operations
- Trailer integration and logistics coordination
- Water testing, commissioning, and delivery

KEY DIFFERENTIATORS

- Direct manufacturer relationship with Superformance Jet Boats LLC
- All-aluminum vessel construction using marine-grade alloys
- Hidden electrical routing for water protection
- Turnkey delivery — vessels arrive fully operational
- Designed for demanding government maritime missions

RELEVANT EXPERIENCE

Contract Name/#: FA441725P0162
Agency/Client: U.S. Airforce – 1 SOCONS
Scope: Refurbishment of two 38’ SAFE Boat Full Cabin vessels to full operational status.

CORPORATE DATA

Legal Name: AD4K LLC
UEI: DW2MG391FCJ6
CAGE Code: 9SCX3
Business Type: Small Business
SAM Registration: Active
Accepts Government Purchase Card: Yes
Year Established: 2023
Headquarters: Hoschton, GA

PRIMARY NAICS CODES

- 423510
- 423860
- 423690
- 423990
- 488390
- 488190
- 541614
- 561110

CERTIFICATIONS

SB – Small Business

COMPLIANCE

- U.S. Coast Guard (USCG) standards
- American Boat & Yacht Council (ABYC) guidelines
- Federal and State marine safety regulations

WARRANTY OVERVIEW

- Hulls – Lifetime structural warranty
- Trailers – 5-year warranty
- Engines – 3-year OEM manufacturer warranty
- Electronics – 3-year manufacturer warranty

KEY CUSTOMERS

- U.S Air Force
- U.S. Special Operations Command
- Florida Fish And Wildlife Conservation Commission
- All Federal, State, and Local Agencies

CONTACT INFORMATION

Primary Contact: Camilla Oliver
Title: Procurement Director
Phone: +1 (332) 208-4278
Email: Camilla@ad4k.us
Website: https://www.ad4k.us/

Docusign Envelope ID: 60661BB5-1D7D-42A4-B200-38CACBEC3886

Past Performance

Reference #1			
Contract #:	FA441725P0162		
Project Name:	SAFE Boat Refurbishment		
Agency:	U.S. Air Force		
Agency Address:	350 Tully St, BLDG 90339, Hurlburt Field, FL 32544		
Point of Contact	***Name***	***Phone #***	***Email***
POC 1:	Guillermo Gonzales	+1 (850) 884-7619	guillermo.gonzales@us.af.mil
POC 2:	Ashley Williams	+1 (850) 882-5125	ashley.williams@us.af.mil
Project Dates for Work Performed	***START DATE***		***END DATE***
Dates:	23 September 2025		12 August 2026
Project Location:	1 S0G RM, AF BPN NO MILSBILLS PROCESSES, 820 TULLY ST, HURLBURT FIELD, FL 32544-0000		
Project Description:	Refurbishment to restore two (2) 38'SAFE Boat Full Cabin vessels (2012 model) to full operational status for the 1 SPECIAL OPERATIONS SUPPORT SQUADRON at Hurlburt Field Air Force Base (AFB). **Project Value: USD 588,146.60**		

Reference #2			
Contract #:	H9242126PE016		
Project Name:	Snow Equipment rental Alaska SOTD		
Agency:	HQ USSOCOM		
Agency Address:	HQ USSOCOM 905TH CBN, X4047 NEW DAWN DR FORT LIBERTY, NC 28310 UNITED STATES		
Point of Contact	***Name***	***Phone #***	***Email***
POC 1:	Samuel Capello	9109089288	samuel.p.capello.mil@army.mil
POC 2:	Alan Farr	9108063847	alan.farr.mil@socom.mil
Project Dates for Work Performed	***START DATE***		***END DATE***
Dates:	2 February 2026		2 February 2026
Project Location:	Building # 2019 Old Richardson HWY, Delta Junction AK 99737		

Project Description:	AD4K supplied specialized snow equipment to conduct Observer Coach Train (OCT) training for the special Operation training Detachment out of Fort Polk JRTC. **Project Value: USD 60,040.92**

Reference #3 - Collective Experience			
Contract #:	70Z08025P20613B0		
Project Name:	Not Available		
Agency:	United States Coast Guard		
Agency Address:	HQ USSOCOM 905TH CBN, X4047 NEW DAWN DR FORT LIBERTY, NC 28310 UNITED STATES		
Point of Contact	***Name***	***Phone #***	***Email***
POC 1:	Craig Faw	+1 (206) 815-1043	Craig.A.Faw3@uscg.mil
POC 2:			
Collective Experience Employee			
Full Name	Guill Hechevarria		
Previous Employer's Name	TECH SERVICE SOLUTIONS LLC		
Previous Position Title	Operation Manager		
Project Dates for Work Performed	***START DATE***		***END DATE***
Dates:	9 July 2025		Completed upon delivery and acceptance of manufactured equipment.
Project Location:	2401 Hawkins Point Road Receiving Room - Building 88 Baltimore, MD 21226		
Project Description:	Manufacturing and delivery of four (4) marine hatches for United States Coast Guard vessels. Fabrication included marine-grade hatch assemblies designed to meet Coast Guard safety and operational standards. **Project Value: USD 17,092.00**		

Docusign Envelope ID: 60661BB5-1D7D-42A4-B200-38CACBEC3886

SUPERFORMANCE JET BOATS LLC
2637 W 76 Street
Hialeah, FL 33016
United States of America
Phone: 954-615-7382
Email: Superformancejetboats@gmail.com

LETTER OF AUTHORIZATION

To Whom It May Concern,

This letter serves as formal authorization that AD4K LLC is fully authorized to market, quote, sell, and support the products and services of SUPERFORMANCE Jet Boats LLC.

This authorization includes full access to all applicable technical documentation, product specifications, manufacturer information, and compliance data necessary to support customer requirements and contractual obligations.

Additionally, AD4K LLC is authorized to represent SUPERFORMANCE Jet Boats LLC in communications with customers, including federal, state, and local government agencies, and to provide products that are new, genuine, and fully supported by the manufacturer.

This authorization shall remain valid unless otherwise revoked in writing by SUPERFORMANCE Jet Boats LLC.

Should you require any additional information or verification, please do not hesitate to contact us.

Respectfully,

Guillermo Hechevarria
Owner / Authorized Representative
SUPERFORMANCE Jet Boats LLC

Signature:
Guillermo Hechevarria

Docusign Envelope ID: 60661BB5-1D7D-42A4-B200-38CACBEC3886

U.S. Department of Homeland Security
United States Coast Guard

Commandant
United States Coast Guard

2703 MLK Jr. Ave, SE Stop 7501
Washington DC 20593-7501
Staff Symbol: CG-BSX-23
Email: MICapp@uscg.mil
Websites: uscgboating.org
Website: www.safeafloat.com

16765
June 25, 2021

Guillermo Hechevarria
Superformance MF Inc
2637 W 76 St
Hialeah FL 33016

Dear Guillermo Hechevarria:

This is in reference to your request for a Manufacturer Identification Code (MIC). Your company is assigned the following MIC:

AEK

Please complete and sign enclosure (1), the MIC verification form, and scan it and return by email (*the preferred method*), or return it to us by mail. **Also, please note that the regulations in 33 CFR §181.33(b) require you to notify this office if you change company ownership, name, or address**; failure to do this will subject you to the penalties in Title 46, United States Code, Section 4311.

You can access the USCG Boat Builder's Handbook at: http://uscgboating.org/regulations/boatbuilders-handbook.php. This handbook contains all of the information necessary for you to build compliant recreational boats. The regulations which prescribe the use of your company's MIC in the Hull Identification Numbers (HIN) appear in 33 CFR §181.23.

The Coast Guard Office of Auxiliary and Boating Safety, Recreational Product Assurance Branch believes you will find these materials to be beneficial. Please feel free to contact the office with any suggestions or questions you may have. You are also encouraged to visit our websites at: www.uscgboating.org and www.safeafloat.com.

Sincerely,

Kristopher Franklin

CWO Kristopher Franklin
Office of Auxiliary and Boating Safety
Recreational Boating Product Assurance Branch
United States Coast Guard
By direction of the Commandant

Enclosures
(1) MIC verification form
(2) Hull Identification Number (HIN) Sample

Docusign Envelope ID: 60661BB5-1D7D-42A4-B200-38CACBEC3886

MIC VERIFICATION FORM

COMMANDANT (CG-BSX-23)
US COAST GUARD

16765
June 25, 2021

Your company is assigned the following Manufacturer Identification Code:

AEK

Our records contain the following information concerning your company:
Is this information correct? ___ YES or ___ NO
If not, please make corrections in the spaces provided to the right.

Company Information	Current in USCG Database	Recommended Corrections
Company Official:	Guillermo Hechevarria	
Company Name:	Superformance MF Inc	
Company Name:		
Parent Company:		
Mailing Address:	2637 W 76 St	
City/State/Zip:	Hialeah/FL/33016	
Phone:	305-420-6034	
E-mail:	superformancemfg@gmail.com	
Website:	www.superformancejet.com	
Fax:		
Cell:		
Factory Information	IF DIFFERENT FROM MAILING ADDRESS -	(P.O. BOX NOT ACCEPTABLE):
Factory - Address, POC, & Phone:		

Additional comments:

_____

_____

SIGNATURE: _____ DATE: _____

NOTE: *If you have recently faxed or e-mailed updated information to us, you do not need to resend this form. If this information is correct, use this form to submit future changes of company contact information.*

Sheet1 Sheet2 Sheet3

Bid Proposal Form

Purchase of 33' Fire Interceptor with Trailer

				DESCRIPTION	QUANITY	UNIT PRICE
1				10m (33') Fire Interceptor	1 Each	$ 303,880.00
2				BoatMaster Trailer per specifications - OR EQUIVALENT	1 Each	$ 12,000.00$
3				Trucking to Florida	1 Each	$ 0.00
					GRAND TOTAL	
						$315,880

COMPANY NAME: AD4K LLC

SIGNATURE:

Docusign Envelope ID: 60661BB5-1D7D-42A4-B200-38CACBEC3886

Docusign Envelope ID: 60661BB5-1D7D-42A4-B200-38CACBEC3886

Bid Proposal Form

Purchase of 33' Fire Interceptor with Trailer

	DESCRIPTION	QUANITY	UNIT PRICE
1	10m (33') Fire Interceptor	1 Each	863,693.30
2	BoatMaster Trailer per specifications - OR EQUIVALENT	1 Each	27,300.00
3	Trucking to Florida	1 Each	16,000.00
		GRAND TOTAL	$ 906,993.30

COMPANY NAME: MetalCraft Marine, US, Inc.

SIGNATURE: 04/23/26

Docusign Envelope ID: 60661BB5-1D7D-42A4-B200-38CACBEC3886

MetalCraft Marine
INCORPORATED

April 6 ,2026
Jacksonville Fire & Rescue Department
214 N. Hogan Street
1st Floor, Ed Ball Building
Room 110, Jacksonville, FL
32202
Attention: Boat Committee

Reference: 10M (33') Fire Interceptor – Port Security and Emergency Response Vessel

We have greatly appreciated and enjoyed working with Jacksonville Fire & Rescue over these past many years. Your marine program is one of the best organized in the country and how you handled the Xiamen ship fire was nothing short than amazing. We recently visited the vessels and once again were impressed at your high level of maintenance.

There was some confusion in this initial bid with the technical specification which resulted in the rebid, we have clarified certain specification issues that remain. Omitted is the actual FLIR M-364 camera, Whelen Emergency lights & Siren with controller and Zipwake trim tabs from the original discussion/bid, totalling over $30,000. These items can be added after if desired, along with some essential spotter windows.

As you know from these many years working together the MetalCraft boats last a very long time, are easy to service and maintain and we are there whenever you need service and support.

Terms Offered; 10% after preconstruction meeting
20% at commencement of construction
20% at completion of metalwork
20% at receipt of engines
20% at completion of seatrials
10% at delivery

We look forward to working with you on this project. If we are successful in this bidding process, we can start building in less than a month.

Thank you for this opportunity,

Jay M.

Jay Milner
Sales
MetalCraft Marine

Docusign Envelope ID: 60661BB5-1D7D-42A4-B200-38CACBEC3886

Docusign Envelope ID: 60661BB5-1D7D-42A4-B200-38CACBEC3886

Docusign Envelope ID: 60661BB5-1D7D-42A4-B200-38CACBEC3886

Docusign Envelope ID: 60661BB5-1D7D-42A4-B200-38CACBEC3886

GENERAL NOTES

1. ALL DIMENSIONS ARE IN MILLIMETERS UNLESS OTHERWISE STATED.
2. SOME OPTIONS MAY BE SHOWN.

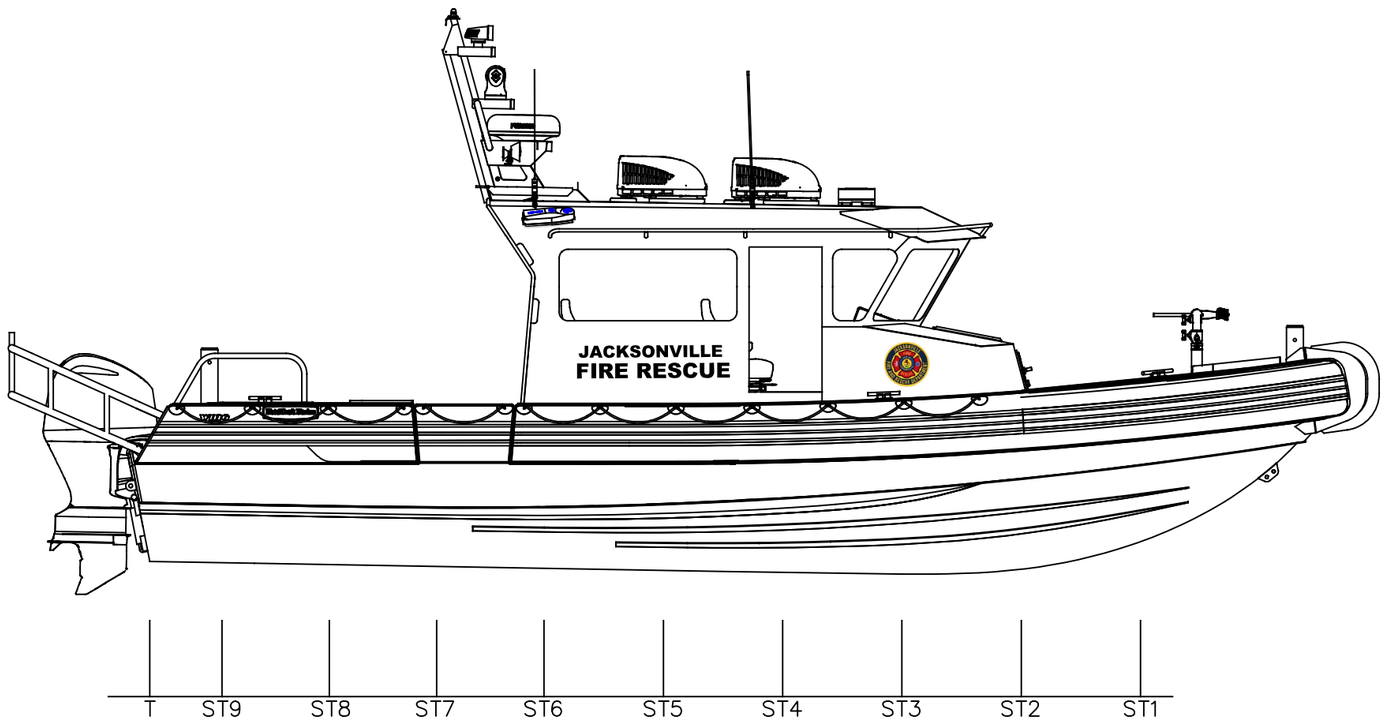

4	B1	OUTBOARD SECTIONAL VIEWS
3	B1	INBOARD PROFILE AND ARRANGEMENT
2	B1	OUTBOARD PROFILE AND DECK PLAN
1	B1	TITLE SHEET
SH	REV	TITLE

SHEET REVISION STATUS AND TITLE INDEX

10M INTERCEPTOR	–
PLAN SET	HULL

HULL APPLICATION TABLE

REVISIONS

REV	ITEM	DESCRIPTION	DATE
B1	–	UPDATED VARIOUS ITEMS	2026–03–26

NO.	TITLE	DRAWING NO.

REFERENCE DOCUMENTS

SPECIAL NOTATIONS

VESSEL PARTICULARS	
LENGTH OVERALL	11492 (37'–8")
LENGTH MOULDED	10000 (32'–10")
BEAM OVERALL	2980 (9'–9")
BEAM MOULDED	2598 (8'–6")
DEADRISE	22°
DRAFT (ENGINES RAISED)	560 (1'–10")
ENGINES	2x 300HP MERCURY SEAPRO

TECHNICAL DESIGNATION

THIS DRAWING CONTAINS PROPRIETARY AND CONFIDENTIAL INFORMATION OF METALCRAFT MARINE INC. AND IS LOANED IN CONFIDENCE WITH THE UNDERSTANDING THAT IT WILL NOT BE REPRODUCED NOR USED IN ANY MANNER WHATSOEVER DETRIMENTAL TO THE BEST INTEREST OF METALCRAFT MARINE INC. AND SHALL BE RETURNED ON DEMAND. DRAWING MAY CONTAIN OPTIONAL ITEMS NOT FORMING PART OF CONTRACT/PROPOSAL.
COPYRIGHT OF METALCRAFT MARINE INC. 2026

METALCRAFT MARINE INCORPORATED
349 WELLINGTON STREET, KINGSTON
ON K7K 6N7

10M INTERCEPTOR

ENGINEERING AND INTEGRATION SHIPBUILDER DRAWINGS

GENERAL ARRANGEMENT
TITLE SHEET

SIZE	FSCM CAGE NO.	DRAWING NO.	REV
B	1T8W7	10MINT–81364–801–001	B1

SCALE 1:50 | STATUS: RELEASED | SHEET 1 OF 4

Docusign Envelope ID: 60661BB5-1D7D-42A4-B200-38CACBEC3886

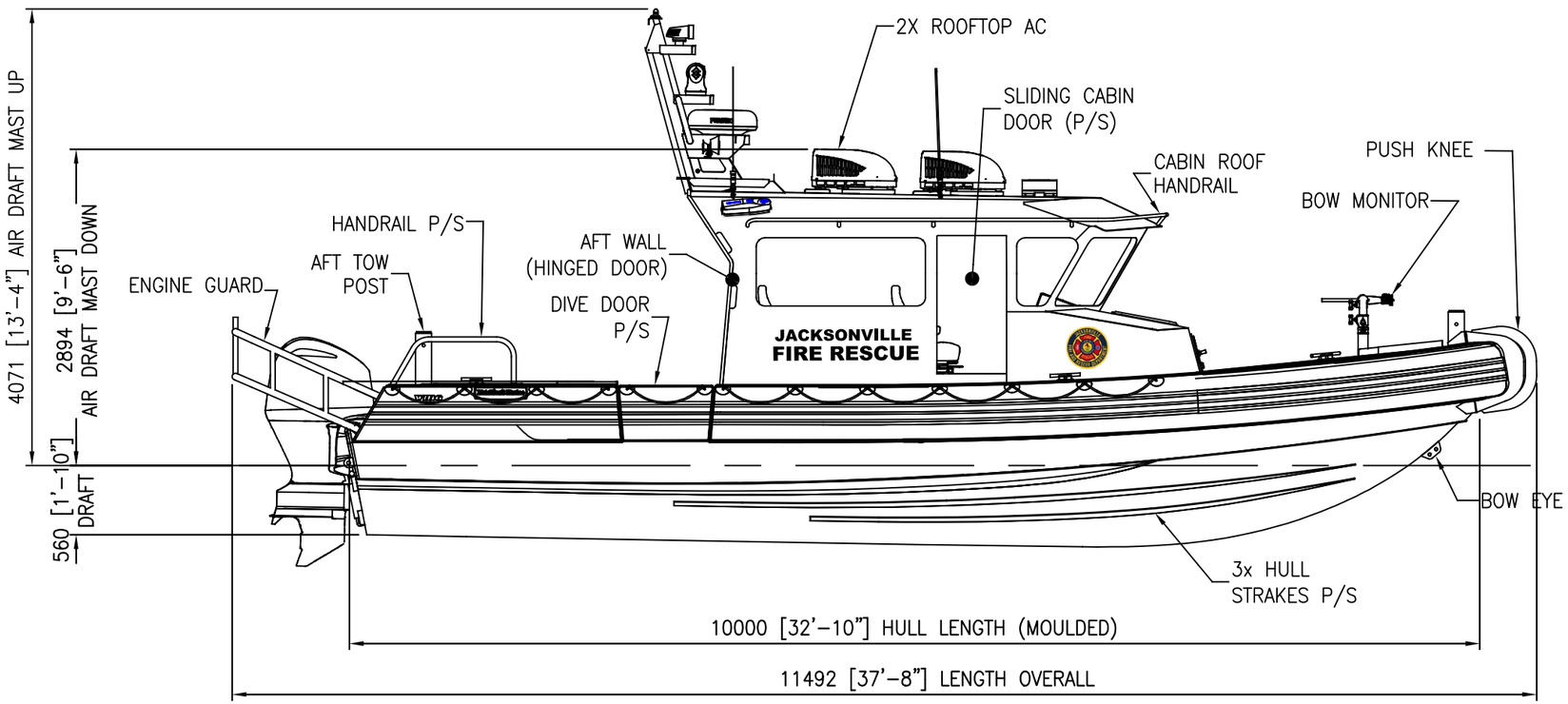

OUTBOARD PROFILE (STBD)

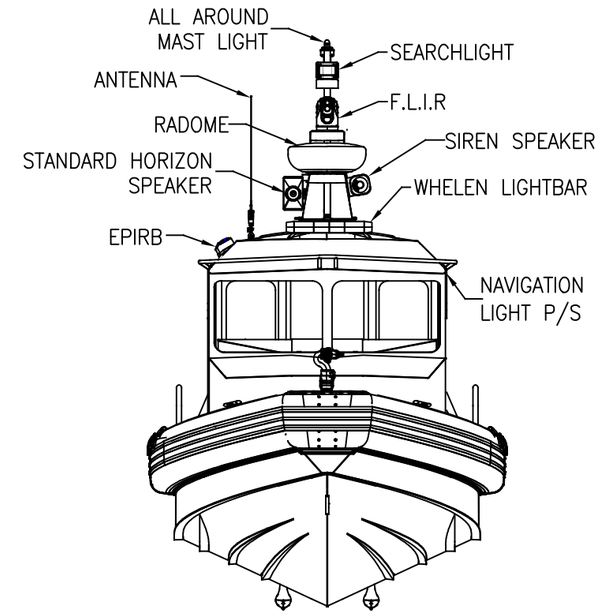

BOW ELEVATION

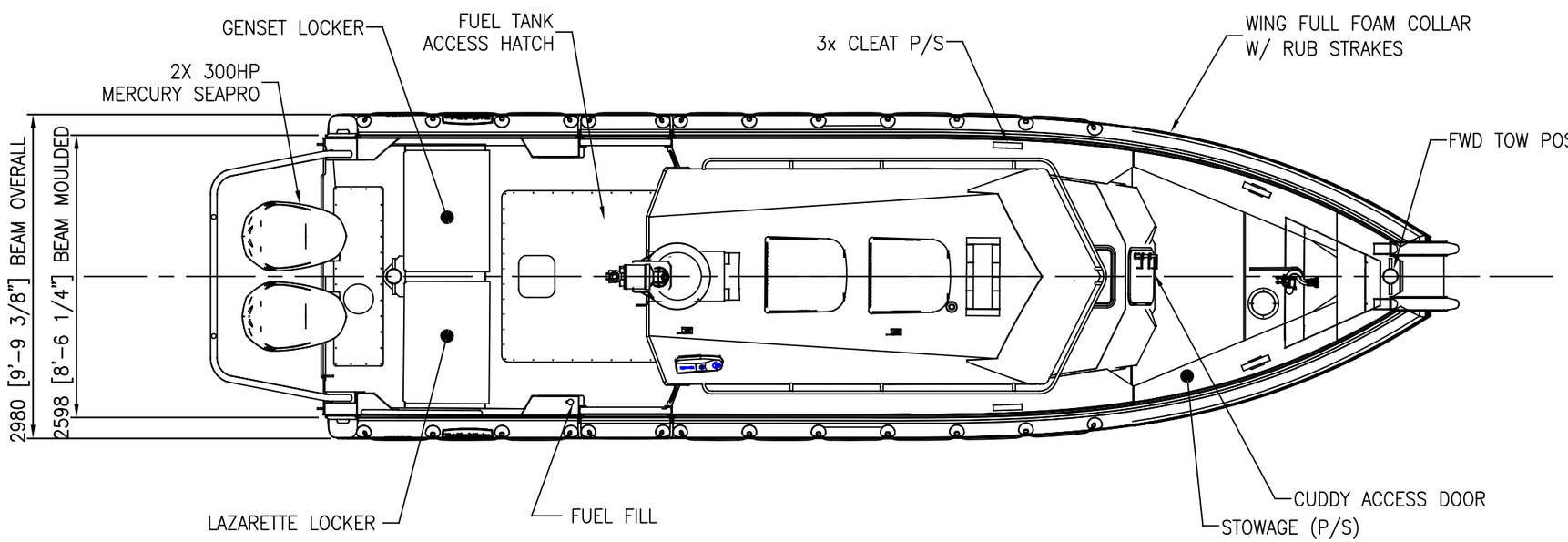

DECK PLAN

© METALCRAFT MARINE INC. 2026

METALCRAFT MARINE INCORPORATED
349 WELLINGTON STREET, KINGSTON
ON K7K 6N7

10M INTERCEPTOR

ENGINEERING AND INTEGRATION
SHIPBUILDER DRAWINGS

GENERAL ARRANGMENT
OUTBOARD PROFILE AND DECK PLAN

SIZE	FSCM CAGE NO.	DRAWING NO.	REV
B	1T8W7	10MINT-81364-801-001	B1
SCALE 1:50		STATUS: RELEASED	SHEET 2

Docusign Envelope ID: 60661BB5-1D7D-42A4-B200-38CACBEC3886

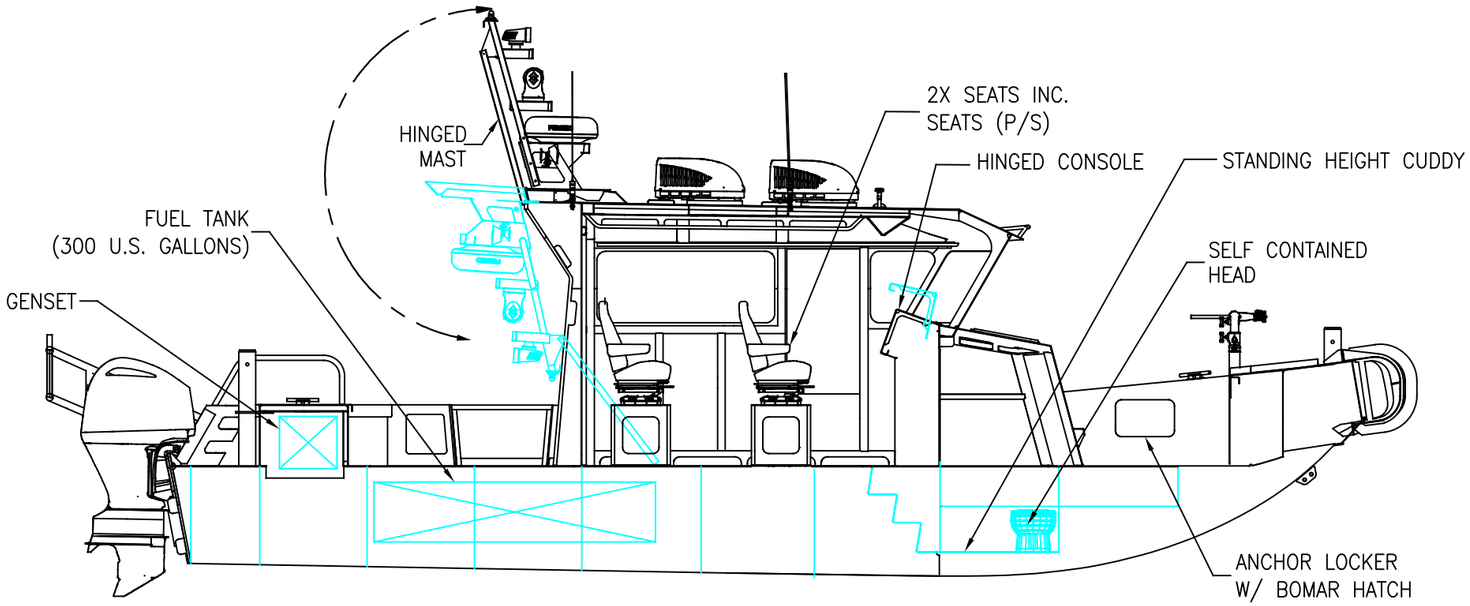

INBOARD PROFILE (PORT)

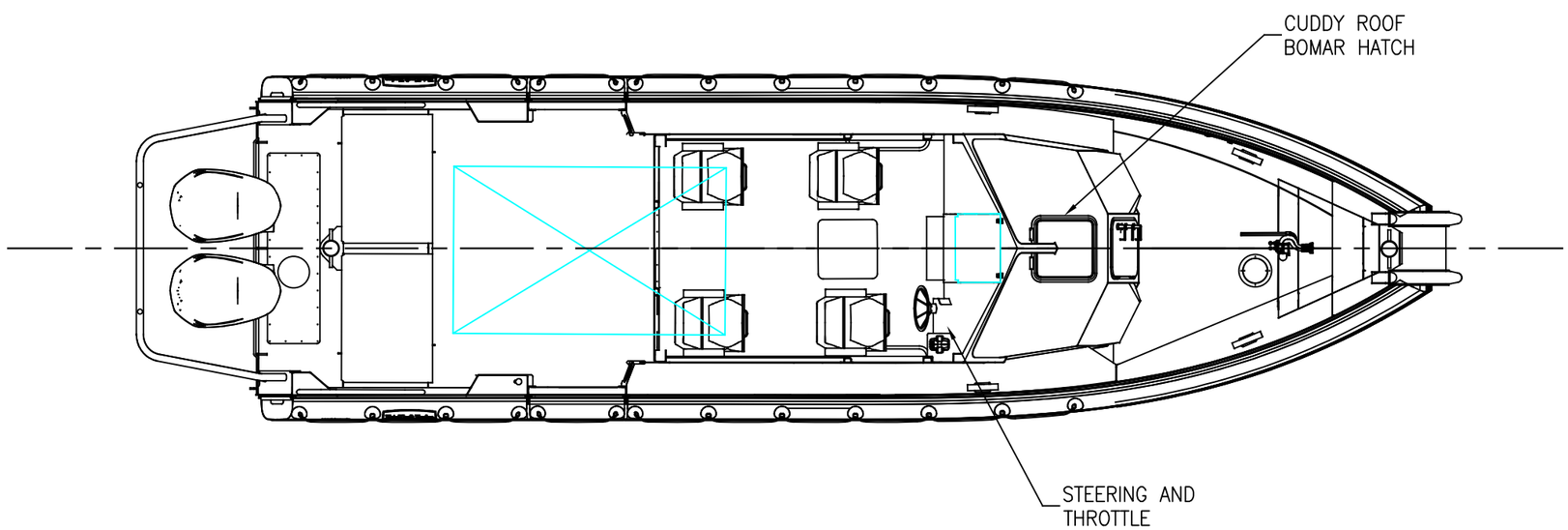

INTERNAL ARRANGEMENT

© METALCRAFT MARINE INC. 2026

METALCRAFT MARINE INCORPORATED
349 WELLINGTON STREET, KINGSTON
ON K7K 6N7

10M INTERCEPTOR

ENGINEERING AND INTEGRATION SHIPBUILDER DRAWINGS

GENERAL ARRANGMENT

INBOARD PROFILE AND ARRANGEMENT

SIZE	FSCM CAGE NO.	DRAWING NO.	REV
B	1T8W7	10MINT-81364-801-001	B1
SCALE 1:50		STATUS: RELEASED	SHEET 3

Docusign Envelope ID: 60661BB5-1D7D-42A4-B200-38CACBEC3886

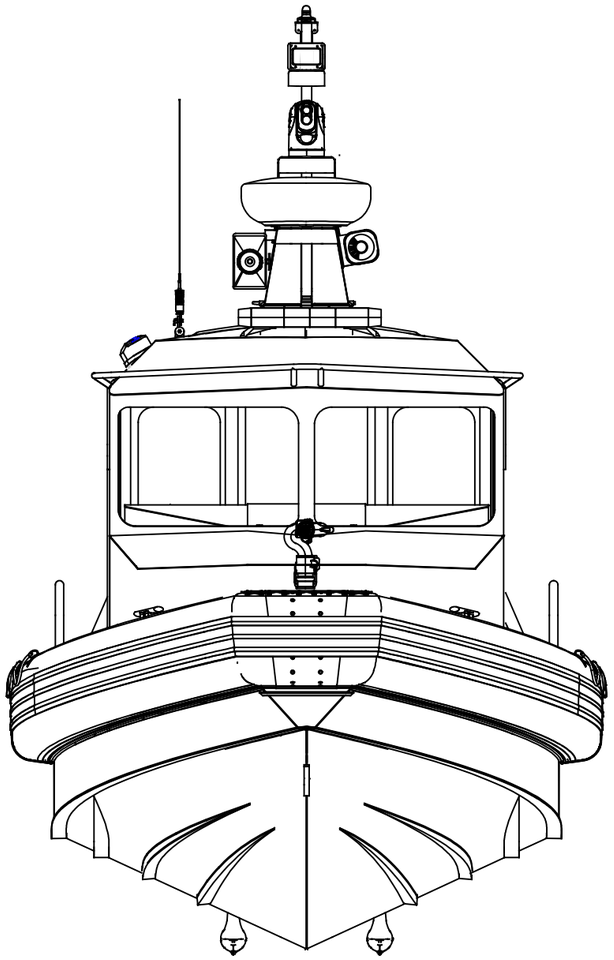

OUTBOARD SECTION
(LOOKING AFT AT BOW)

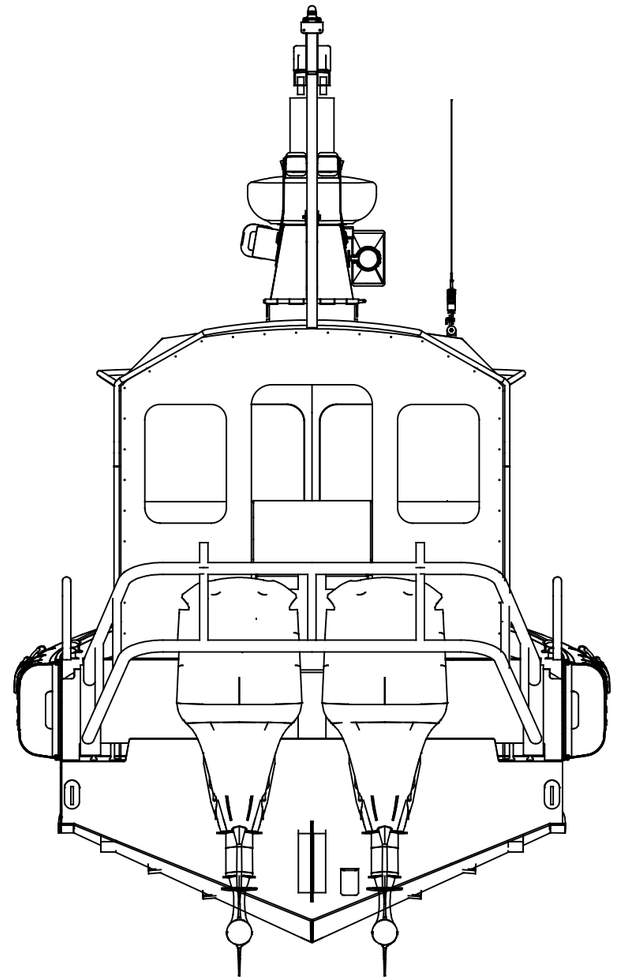

OUTBOARD SECTION
(LOOKING FWD AT STERN)

© METALCRAFT MARINE INC. 2026

METALCRAFT MARINE INCORPORATED
349 WELLINGTON STREET, KINGSTON
ON K7K 6N7

10M INTERCEPTOR

ENGINEERING AND INTEGRATION
SHIPBUILDER DRAWINGS

GENERAL ARRANGMENT
OUTBOARD SECTIONAL VIEWS

SIZE	FSCM CAGE NO.	DRAWING NO.	REV
B	1T8W7	10MINT-81364-801-001	B1

SCALE 1:30	STATUS: RELEASED	SHEET 4

Docusign Envelope ID: 60661BB5-1D7D-42A4-B200-38CACBEC3886

MetalCraft Marine
INCORPORATED

349 Wellington St., Kingston, Ontario, K7K-6N7 & 22419 Fisher Rd., Watertown, New York, 13601

Jacksonville F&R D — 10M (33') Fire Interceptor — 2026-04-06

Standard Features — Port Security and Emergency Response Vessel

METAL HULL

The Fire Interceptor 10M boat is 32'10" X 8'6" with a draft of 22". It comes complete with 5/16" bottom and 3/16" hull sides. The deck is 3/16" non-skid plate. The Interceptor hull shape is a deep V hull with a very fine bow entry to easily break through significant waves (USCG rated for Sea State 6 survivable) and steep chop. The fine entry provides unusual sound reduction from waterborne noise. The hull deadrise is 22 degrees aft to provide high static stability based on the vessel's width and meets ISO 12215 construction standards and ISO 12217 intact stability. DB in the cabin at cruise RPM is in the 78 Db range. All welding is as per AWS welding standards and the boat comes with anti corrosion monitoring as per ABYC and the MCM 10 year hull warranty. Expected service life is 25 years. The boat is built to USCG and USN MII standards and meets all requirements of CFR 46 and ABYC. The design was selected by the USCG for the Long Range INterceptor II & III

METAL OTHER

Superstructure	INT wheelhouse		1
	Cut parts for SS	Alumin	500
	Bend cabin top beams	Bending sub-purdys	1
	Erect superstructure	Head clearance of 6'5" min.	1
	Install interior framing		1
	Weld superstructure	Welding wire	1
	Console hatches from inside cuddy for elect access	MCM metal hinges	2
	Port & Stbd console	design	1
	Head compartment in main cabin	AS per FPS Bomon door under fitouit	1
Aluminum Sub assemblies			
	seat boxes		4
	Seat box type cuddy seats P&S	Misc metal	2
	Bow eye and stern tow eyes	Misc metal , includes to pendant 90	1
	Soft Patches	Aluminum	2
	P&S bench seat boxes with storage	Misc metal	2
	Fore and aft tow posts	4" sched 80 pipe	2
	Stern Chicago Klein grip	Supply only	1
	Aft deck fuel shutoffs hatch	bomar	1
	Cleats	Welded 10"	6
See fitout	Handrails aft	Misc pipe 1.5"	2
	Handrails roof Outside Cabin	Misc pipe	2
	Handrails inside Cabin	Misc pipe 2 in main cabin, 2 in cuddy	4
	Foredeck hand rails		2
	Anchor bracket	Brackets in bow locker and aft railing TBD	1
	Anchor locker	Must have watertight hatch Bomar plastic	1
	Lifting eyes	Engineered to safety margin	4
	Tie downs for trailer	for trailer	6
	Outboard guard	Misc pipe	1
	Removable dive ladder	PIW ladder see fitout	1
	QA and safety hours		1

PROPULSION

Engine installation	Mercury Seapro 300 HP	2
Power steering system	Merc PS system	1
Pre rig kit	Merc pre-rig	1
	Props	2
Controls	Controls	2
Fluids	Machining costs	1
QA & safety hours	Misc	1

SYSTEMS

	Work Package	Materials	
Bilge System			
	Bilge pumps	2000 GPM	2
	Installation hardware	float switch	2
	Wiring and switches	Visual indicator lits	2
	Whale manual bilge pump	Manual	1
Fuel System	Tanks	1 x 300 USG fuel tanks 5086 FMT	1
	System install	fuel fill/vent, fitt'gs hose, guage	1
	Merc single filters	MERC steering	2
	Fuel shut off via deck hatch	Fuel shut off valves	3
	Fuel shut off deck hatch	Bomar 12 X 12"	1
Steering System	Seastar steering	MERC steering	1
		Edson Destroyer wheel	1
Seawater System		Groco vertical intake	1
Exhaust System		Centeck fiberglass waterlift muffler	1
	Transom connection	Elbows, clamps and hose	1
Fresh water	20 gallon freshwater tank	Poly tank sink basin in cuddy w/pump	1
	marine toilet eletcric	Use freash water tank for water supply, macerator overboard	1
	Roof mout AC units	Dometic 1,500 BTU Roof mount	2
Fire Suppression	Extinguishers	3 of BC units	3
	Fire pump and Monitor	Darley 2BE with TFT monitor (w camlock)	1
	QA & Safety hours		

FITOUT

	Work Package	Materials	
Painting			
	Cabin beadblast	Blast	1
	Bottom and interior	Epoxy bottom and behind collar includes sandblast and deck	1
	Prep	Vacuum, wash, chlorid, 2 extra coats	1
	Hull bottom	Sand	1
	Interior paint	Zolatone matte gray	1
	Decals	$1,500 alocated	1
Interior Fit Out	Deck paint	Sandblasted deck	1
	Equipment installation	General	1
	Windows	AJR windows 2X520, 4X300, 2X5400 no spottter windws required Frght 400	1
	Heated windows	4 front	4
	Door, dogged	AJR all sliding doors aft and P inlcudes freight	3
	Interio head door	Bomon interio door and exterior hatch door	2
	Cabin, pre-cu insulation kit, confirm is fire retardent	Elastoproxy	1
	Bench seat cushions	Quinte canvas	2
	Roof or Cuddy roof hatch 18-20"	Bomar from Inventory	1
	Helm crew seats suspension with backs	Shock mitigating suspension seats SeatsInc	4
	Rubber deck matting	NO Traxs interior	1
	Foam flotation	Norseman foam billets to meet NFPA 1925	1
	Deck plates	Viking	1
	Compartmentilization	To verify	1
	Wing collar foam only	Wing 18" foam collar - Grey	1
	Hull anodes	10 lb alum anodes	6

ELECTRICAL			
	Work Package	**Materials**	
Electrical system			
D/C Systems			
	Marine electrical installation meets ABYC	Wire	1
	Wire labelling	Mechanical heatshrink wire labels	1
	D/C panel	Custom 12v battery panel	1
	Battery boxes	Boxes w/brackets	8
	Batt selector switch	Bluesea Battery switches	3
	Battery isolators	Perfect switch	2
	D/C outlets	12v DC receptacle	6
	Batteries house AGM	House	2
	Batteries start 27 series AGM	Start 27 series	2
	Battery charger	Newmar PT-24-45U	1
	Cabin fans	Caframo	4
	Hull potential meter	With logger and download stick and reference cell denots any corrosion	1
	Electrical Distribution Components	Busbars, terminal strips, watertight connectors, dbl pole switches, meters etc	1
A/C Systems	Battery charger	Newmar 2 bank	1
	A/C panel	Blue Seas single shorepower breaker for shorepower and lockout	1
	Shorepower inlet	Marinco	1
	Shorepower cord	Marinco 50ft 30Amp Cordset	1
	Transformers	Victron	1
	ELCI - ABYC required	30Amp ELCI enclosure with reverse polarity indicator	1
	Generator	Westerbeke 5.0 KW	1
Lighting	Bow lights	Panel & harness	1
	Pilothouse lighting	red/off/white dome lights with main console switch	8
	Dimmer	Main console dimmer and low level deck lighting dimmer	2
	Cabin liting	4 main cabin, 1 head and 2 cuddy	7
	Deck lighting D/C	Superbright floods LED	3
	Low level deck lighting	Amber courtesy lights by steps	10
	Navigation lights	Hella LED navigation lights	4
	Search light	GOLight stryker	1
	EPIRB	ACR	1
	Windshield wiper	Imtra multi speed self parking pantograph	2
	Horn	Electric air horn Trumpet Amazon audible for 1 KM	1
Navigation Equipment			
	Compass	Ritchie 4" with deviation card	1
	Monitor	Garmin 9" GPS MAP	2
	Radar	GMR 18XHD 4KW dome	1
	GPS anttena	Antenna	1
	Depthsounder module and transducer	Depthsounder	1
Communication Equipment		Navigation chip	1
	Radio VHF	ICOM 605	1
	VHF Antenna	Shakespeare 5225xt	1
	Antenna Mounts	Shakespeare 4187-HD	2
	FLIR JCU joystick		1
	QA & Safety hours		1

MISCELLANEOUS			
	Work Package	**Materials**	
Delivery and Commissioning	Inspection - 3 men, two trips	Air and expenses	2
	Manuals	COTS	2
	Design		1
	Miscellaneous fasteners	316 stainless	1
Review tresting PDITs	Testing & Trials Builder	Fuel	1
	Delivery loading, shrink wrap	Protectall	1
	Training and delivery recommission on site for 5 participants	4 days Commissioning and training	1
	Ground tackle,	Danforth anchor/rode	1
	Docking package	lines and fenders	4
	Labels		1
	Life ring	Non ferrous metal brackets MCM made	1

Docusign Envelope ID: 60661BB5-1D7D-42A4-B200-38CACBEC3886

Safety gear	Misc	1

Total Price (Above Configuration) w discount	**$863,693.30**

Docusign Envelope ID: 60661BB5-1D7D-42A4-B200-38CACBEC3886

ITB 17646-26 – AD4K Compliance Matrix (Full Version)

Generated on: 2026-04-27

Specification	AD4K Offering	Compliance
Hull & Structure		
32'10" × 8'6"; 22" draft	Exact match stated in proposal	Meets
5/16" bottom plate	5/16" aluminum bottom plate	Meets
3/16" hull sides	3/16" aluminum hull sides	Meets
3/16" non-skid deck	3/16" non-skid aluminum deck	Meets
ABS welding standards	Fully compliant with ABS welding standards	Meets
ABYC + USCG CFR 46 compliance	Meets ABYC + USCG CFR 46	Meets
Push knee with heavy-duty rubber	Push knee with heavy duty rubber installed	Meets
MetalCraft 10-year hull warranty	Superformance Lifetime Hull Warranty	Exceeds
Propulsion		
Twin Mercury SeaPro 300 HP	Twin Mercury SeaPro 300 HP	Meets
Mercury power steering	Mercury power steering	Meets
Mercury pre-rig kit	Mercury pre-rig	Meets
Props	OEM props provided	Meets
Dual engine controls	Dual Mercury controls	Meets
Bilge System		
2000 GPM pumps (likely GPH intended)	2000 GPM (likely same rating; unit check recommended)	Meets (unit check)
Float switches	Float switches installed	Meets
Visual indicators	Visual indicator lights	Meets
Whale manual pump	Manual Whale pump	Meets
Bilge alarm	Bilge alarm installed	Meets
Bilge fume alarm	Bilge fume alarm installed	Meets
Fuel System		
1×300 USG aluminum 5086 tank	1×300 USG 5086 alloy tank	Meets
Fuel fill/vent/gauge/fittings	All installed per spec	Meets
Mercury single filters	Mercury single filters	Meets
Three shutoff valves	Three shutoff valves	Meets
Bomar hatch for shutoff access	Bomar 12×12" hatch	Meets
Steering & Controls		
SeaStar system	SeaStar provided	Meets
Mercury steering	Mercury steering	Meets
Edson wheel	Edson destroyer wheel	Meets

Docusign Envelope ID: 60661BB5-1D7D-42A4-B200-38CACBEC3886

Seawater / Exhaust / Fresh Water		
Groco vertical intake	Groco vertical intake	Meets
Centek water-lift muffler	Centek fiberglass water-lift muffler	Meets
Transom elbows/clamps/hoses	All included	Meets
20-gal freshwater tank + sink + pump	20-gal tank + sink + pump	Meets
Electric marine toilet (fresh water)	Electric toilet (fresh water)	Meets
Macerator overboard	Macerator installed	Meets
Fresh water washdown/shower	Fresh water washdown/shower	Meets
HVAC & Fire Suppression		
Flanar diesel heater	Flanar diesel heater with windshield ducting	Meets
Two Dometic 1500 BTU AC units	Two Dometic 1500 BTU units	Meets
3 BC extinguishers	3 BC extinguishers	Meets
Darley 2BE pump + TFT monitor	Darley 2BE with TFT monitor	Meets
Interior Fit-Out		
AJR windows	AJR windows	Meets
Heated windows (4)	Heated windows (4)	Meets
AJR sliding doors (aft+port)	AJR sliding doors	Meets
Bomon interior door	Bomon interior door	Meets
Bench seat cushions (Quinte)	Quinte canvas cushions	Meets
Bomar 18–20” roof/cuddy hatch	Bomar hatch	Meets
Shock-mitigating suspension seats (4)	SeatsInc suspension seats	Meets
Rubber deck matting/trax	Rubber deck matting	Meets
Foam flotation (NFPA 1925)	Norseman foam billets	Meets
Exterior Fit-Out		
Deck tie-downs (stainless)	Wichard stainless tie-downs	Meets
Wing foam collar (18")	Wing 18" foam collar (grey)	Meets
Hybrid diver handles	Hybrid diver handles	Meets
Hull anodes 10lb aluminum	10lb aluminum anodes (6)	Meets
Dive ladder	Wynne stainless dive ladder	Meets
Electrical – DC		
ABYC electrical installation	ABYC compliant	Meets
Wire labeling	Heatshrink mechanical labels	Meets
Custom 12V panel	Custom 12V panel	Meets
Battery boxes (8)	Battery boxes (8)	Meets
BlueSea battery switches (3)	BlueSea switches (3)	Meets

Docusign Envelope ID: 60661BB5-1D7D-42A4-B200-38CACBEC3886

Perfect Switch isolators (2)	Perfect Switch isolators (2)	Meets
DC outlets (6)	DC outlets (6)	Meets
House AGM batteries (2)	House AGM (2)	Meets
Start AGM batteries (2)	Start AGM (2)	Meets
Newmar PT-24-45U charger	Newmar PT-24-45U	Meets
Hull potential meter	Hull potential meter included	Meets
Distribution components	Busbars, terminal strips, switches	Meets
Electrical – AC		
Newmar 2-bank charger	Newmar charger	Meets
BlueSea shorepower panel	BlueSea shorepower panel	Meets
Marinco shorepower inlet	Marinco inlet	Meets
Marinco 50ft 30A cordset	Marinco cordset	Meets
Victron transformer	Victron transformer	Meets
30A ELCI enclosure	30A ELCI with reverse polarity indicator	Meets
Westerbeke 5.5 kW generator	Westerbeke 5.5 kW	Meets
Lighting		
Bow/Navigation lights	Hella LED nav lights	Meets
Pilothouse lights	Red/off/white dome lights	Meets
Dimmers	Console & deck dimmers	Meets
Cabin lights (7)	Cabin lights installed	Meets
Deck floods (3)	Superbright LED floods (3)	Meets
Low level deck (10)	Amber courtesy lights (10)	Meets
Searchlight	GOlight Stryker	Meets
EPIRB	ARC EPIRB	Meets
Pantograph wipers	Imtra pantograph	Meets
Horn	Electric air horn	Meets
Navigation & Communication		
Ritchie compass	Ritchie 4" compass	Meets
Garmin 9" GPSMAP (×2)	Garmin 9" (×2)	Meets
GMR 18XHD radar	GMR 18XHD	Meets
GPS antenna	GPS antenna	Meets
Depth module + transducer	Depthsounder module	Meets
Heading sensor	Heading sensor	Meets
ICOM M605 VHF	ICOM M605	Meets
Shakespeare 5225XT antenna	Shakespeare 5225XT	Meets
AIS antenna	AIS-capable antenna	Meets
FLIR JCU	FLIR JCU	Meets
Delivery / Training / Misc		
Inspection (3 mem, 2 trips)	Inspection included	Meets
Manuals (COTS)	COTS manuals included	Meets
Fuel for trials	Fuel for testing included	Meets
Delivery loading/shrinkwrap	Included	Meets

Docusign Envelope ID: 60661BB5-1D7D-42A4-B200-38CACBEC3886

Training for 5 participants / 4 days	4 days on-site for 5 participants	Meets
Danforth anchor/rode	Danforth anchor	Meets
Liferaft 6-person	6-person valise liferaft	Meets
Trailer		
BoatMaster MC10M-21 triple axle	MC10M-21 triple axle	Meets
Aluminum I-beam frame	Aluminum I-beam frame	Meets
Diamond tread fenders	Diamond tread fenders	Meets
Pressure treated bunks	Pressure treated bunks	Meets
Electric winch	Electric winch	Meets
12V LED lights	12V submersible LED lights	Meets

Docusign Envelope ID: 60661BB5-1D7D-42A4-B200-38CACBEC3886

Summary of Compliance

Meets: 103

Exceeds: 1

Does Not Meet: 0

Recommendation: ACCEPT

Overall compliance meets or exceeds requirements, with lifetime hull warranty improving on the government's 10-year requirement.

Docusign Envelope ID: 60661BB5-1D7D-42A4-B200-38CACBEC3886

Award Solicitation: Purchase of 10m (33') Fire Interceptor with Boat Master Trailer

Solicitation	ITB 17646-26	Responses Received	4	Invited Suppliers	20
Procurement BU	COJ BU	Active Responses	3	Will Participate	1
Close Date	4/7/2026 16:00	Shortlisted Responses	3	Responded	3
Solicitation Currency	USD				

Overview

	AD4K LLC Response: 461252	Metalcraft Marine Us, Inc Response: 460000	Nassau Trading Inc. Response: 461262
Business Relationship	Prospective	Spend Authorized	Prospective
Supplier Site		Remit To	
Supplier Contact	Woods, Ryan	White, Dana	Ahmed, Masroor
Response Status	Active	Active	Active
Shortlist Status	Included	Included	Included
Response Amount	315,880.00	906,993.30	222,420.00
Total Award Amount			
Time of Response	4/6/2026 12:14	4/7/2026 13:08	4/7/2026 5:32
Response Valid Until			
Reference Number			
Note to Buyer			
Attachments	Yes	No	Yes

Requirements

Requirement		Target Value	AD4K LLC Response: 461252	Metalcraft Marine Us, Inc Response: 460000	Nassau Trading Inc. Response: 461262
1	**Affirmation**				
1.	Type name, title and email of person submitting bid in the comments box.		a. Acknowledge	a. Acknowledge	a. Acknowledge
	Comments		RYAN WOODS, CEO, contracts@ad4k.us	Dana White & Jay Milner	Masroor Ahmed Business Development Executive
2.	Type name of company in the comments box.		a. Acknowledge	a. Acknowledge	a. Acknowledge
	Comments		AD4K LLC	Metalcraft Marine US, Inc	Nassau Trading Inc.
3.	No Alterations: Bidder has not altered the original Solicitation Document in any way and further understands that any such alteration of the original solicitation document may result in rejection of the bid.		a. Acknowledge	a. Acknowledge	a. Acknowledge
4.	Solicitation Silence: The Solicitation Silence policy is in effect for this solicitation and all communications related to this solicitation must be in writing to the designated procurement representative. Violations of the solicitation silence policy may result in the rejection/disqualification of the submission.		a. Acknowledge	a. Acknowledge	a. Acknowledge
5.	Legal authorization and solicitation specific minimum requirements: All bidders must be legally authorized to do business in Duval County and shall comply with all minimum requirements for this bid. Failure to submit evidence for meeting any of these requirements may be grounds for rejection. Vendor shall provide proof of applicable local business licenses and particulars such as specific licensure, experience on similar projects, years of expertise in the area etc.		a. Acknowledge	a. Acknowledge	a. Acknowledge
	Comments		Acknowledged and compliant to the legal authorization and minimum requirements		We are a government reseller and actively participate in various public procurement opportunities. Our company is a registered corporation in the State of New York. We are not registered in Duval County, Florida and do not hold a local business license there.
6.	Certification of No Conflict of Interest: Supplier certifies that no official or employee of the City or independent agency requiring the goods or services described in the specifications has a material financial interest in the Supplier's company. Supplier must complete and submit the attached Conflict of Interest Statement fully detailing any potential conflicts.		a. Contractor certifies that no official or employee of the City or independent agency requiring the goods or services described in the specifications has a material financial interest in the Contractor's company.	a. Contractor certifies that no official or employee of the City or independent agency requiring the goods or services described in the specifications has a material financial interest in the Contractor's company.	a. Contractor certifies that no official or employee of the City or independent agency requiring the goods or services described in the specifications has a material financial interest in the Contractor's company.
7.	Equal Business Opportunity Program: Pursuant to Part 6 of Chapter 126, Jacksonville Ordinance Code, the City of Jacksonville encourages the utilization and participation of Jacksonville Small and Emerging Businesses (JSEBs) in its contract awards based upon availability. It is the City's intent in adopting this program to reflect the philosophy with regards to enhancing participation of JSEBs in all areas of procurement.		a. Acknowledge	a. Acknowledge	a. Acknowledge
8.	Electronic Signature: I understand this acknowledgment serves as my electronic signature and has the same force and effect as my manual signature.		a. Acknowledge	a. Acknowledge	a. Acknowledge
2.	**Submittal Statement**				
1.	Submittal Statement Bidder certifies that this proposal is made in good faith, without collusion or connection withany other entity bidding on this work. Bidder has examined and read all Drawings, Specifications, General and Special Conditions,and other Contract Documents, and all Addenda thereto; and is acquainted with and fullyunderstands the extent and character of the work covered by this Proposal and the specifiedrequirements, for the proposed work. Bidder certifies that no officer or agent of the CITY will directly or indirectly benefit from this bid.Bidder states that this Proposal is made in conformity with the Contract Documents and agreesthat in case of any discrepancy or differences between its Proposal and the Contract Documents,the provisions of the latter shall prevail. Bidder certifies that it has carefully examined the foregoing Proposal after the same wascompleted and has verified every item placed thereon; and agrees to indemnify, defend and saveharmless the CITY against any cost, damage or expense which may be incurred or caused by anyerror in the Bidder's preparation of same. Bidder states that all applicable taxes are included in the unit prices or Lump Sum Bid andacknowledges this project is not exempt from the State or Local Sales or Use taxes, and paymentof such taxes is the responsibility of the Bidder. The undersigned Bidder agrees to keep its bid in effect for 120 calendar days after theBid Opening date to allow the CITY time to award the bid, should it be awarded, and timeto prepare and execute the contract (or issue the purchase order). This time period begins atthe time bids are opened and ends upon the issuance of Notice to Proceed (NTP) by the CITY.The bid prices shall remain in effect throughout the life of the Contract. Failure of the CITY toissue NTP within the specified time period shall allow Bidder to withdraw its Bid andterminate its contract without penalty or forfeiture of Bid Bond. Failure of the CITY to issueNTP within the specified time period shall not entitle Bidder to an adjustment of its Bid prices,unless mutually agreeable by the CITY. Bidder certifies, under penalty of perjury and contract rescission, that it has all required licenses toperform the work required to fulfill the terms of the contract resulting from a successful bid.Furthermore, the Bidder affirms that all subcontractors requiring to be licensed are listed in itsresponse and are properly licensed to perform work on their respective portions of this project.		a. Acknowledge	a. Acknowledge	a. Acknowledge
3	**General Requirements**				
1.	**Scope of Services**: The Fleet Management Division of the City of Jacksonville, Florida is currently accepting bids to obtain source(s) of supply for the item(s) or service(s) as outlined in the bid documents provided. See the attachment for additional information. The purpose of this bid invitation is to obtain information about your firm and its ability to provide these item(s) / service(s) and to obtain pricing commitments for **10m (33') Fire Interceptor with Trailer** as listed in the bid documents.		a. Acknowledge	a. Acknowledge	a. Acknowledge
2.	Specifications: Provide all items or services as identified on each line or identified below in accordance with all other Terms and Conditions specified herein. **See the attachment for additional information.**		a. Acknowledge	a. Acknowledge	a. Acknowledge
3.	**Bidders should submit or comply with the following requirements. Failure to submit any of these requirements may be grounds for rejection:** **a. Vendor or Supplier shall provide proof of applicable local business license if located within Duval County.**		a. Acknowledge	a. Acknowledge	a. Acknowledge
4.	Even though a particular manufacturer's name or brand is specified, bids will be considered on other brands or on the products of other manufacturers unless notified otherwise. On all such bids, Bidder must clearly indicate the product (brand and model number) on which it is bidding and will supply sufficient data in detail to enable an intelligent comparison to be made with the particular brand or manufacture specified. Are you bidding any alternates to the lines listed on this solicitation? If yes, indicate which line and attach data as requested.		a. No	a. No	b. Yes
5.	Buy American Preference: As per Section 126.114 of the City of Jacksonville Ordinance Code, preference will be given to a responsive and responsible vendor offering American manufactured, assembled, or produced goods, and who is within 5% of the lowest responsive and responsible bidder. To receive this preference, the bidder must select the Buy American Preference Compliance Certificate indicator and attach supporting documentation and/or evidence attesting that at least 51% offered in the bid response is manufactured, assembled, or produced in the United States. Bidder is not required to submit for the Buy American Preference. Bidders may quote items that are less than 51% American made but will not be eligible for the preference. Restrictions and exemptions may apply. Please refer to Section 126.114 for specifics. Are you requesting the Buy American Preference?		a. Yes	a. Yes	a. Yes
6.	Federal Funding does not apply to this bid.		a. Acknowledge	a. Acknowledge	a. Acknowledge
4	**Price Sheet**				
1.	**Price Sheet**: Please download the attached spreadsheet to enter prices and upload back. Please do not make any changes to the item descriptions or quantities indicated. **See the attachment for additional information.** **Price Sheet** 1. PROPOSAL a. A Bidder must provide a price on each item listed. b. Unless stated otherwise by the City, all bid prices should include the furnishing and delivery of materials. c. Bidder must insert extended prices obtained by multiplying the proposed quantities times the unit prices. In case of errors, unit prices will govern. The corrected extended prices and corrected Total Base Bid will be used to determine the lowest qualified Bid. d. The Total Base Bid plus selected Alternate(s), if any, will be used to determine the lowest bidder. If selected, Alternate(s) will be awarded in the order listed (i.e. – 1,2,3…). e. Bidder agrees to keep its bid in effect for 120 calendar days after the Bid Opening date to allow the CITY time to award the bid, should it be awarded, and time to prepare and execute the contract (or issue the purchase order). This time period begins at the time bids are opened and ends upon the issuance of Notice to Proceed (NTP) by the CITY. The bid prices shall remain in effect throughout the life of the Contract. Failure of the CITY to issue NTP within the specified time period shall allow Bidder to withdraw its Bid and terminate its contract without penalty or forfeiture of Bid Bond. Failure of the CITY to issue NTP within the specified time period shall not entitle Bidder to an adjustment of its Bid prices, unless mutually agreeable by the CITY. f. Bids in which the prices are obviously unbalanced are subject to rejection. The CITY shall not be liable to the CONTRACTOR for failure to reject or notify the Bidder of any unbalanced bid. 2. CONDITIONS IN BIDDER'S PROPOSAL a. The Bidder shall not stipulate in its Bid Proposal, or append thereto, any conditions contrary to those contained in the Contract Documents. 3. TAXES a. Bidders shall include in their bid prices any sales taxes or use taxes which they are required by law to pay. Bidders are reminded, it is the CONTRACTOR'S responsibility to pay all Florida Sales Taxes that are required to be paid to the State under the subject contract. These taxes, by State law, are not to be set forth as a separate line item. Therefore, the CONTRACTOR shall devise his own method to insure recovery. Additional allowances will not be made for failure to include these required taxes in the proposal.		a. Acknowledge	a. Acknowledge	a. Acknowledge
5	**Response Attachments**				
1.	**Attach Overall Proposal Document Here, Use the following naming convention: Supplier_Name Overall Proposal Document. Include all response pages in a single ".PDF" format file.**		a. Acknowledge	a. Acknowledge	a. Acknowledge
	Attachments		Yes	Yes	Yes

Last Downloaded **4/28/2026 17:29**