Docusign Envelope ID: F54DB230-A150-452A-B3F0-14C4A48C193C

# City of Jacksonville, Florida

*Procurement Award Form (PAF)*

**Part 1 – Form Type:** JPAC 126.204 (a) New Award, Renewals, Waive Technical Defects, Price Increases, NTE Increases.

Goods and/or Services: McCoys Creek Outfall Improvements

**Requested Action and Justification:**

Recommend approval of Change Order #8 to the award with JB Coxwell Contracting for McCoys Creek Outfall Improvements in the amount of $1,157,796.70 for a new total not to exceed $40,613,116.22.

To be executed via formal change order through the Office of General Counsel.

| | | | | | |
|---|---|---|---|---|---|
| **Supplier:** | JB Coxwell Inc | **Basis of Award:** | LPTA | **BID Opening Date:** | 7/28/2023 |

| | | | | | |
|---|---|---|---|---|---|
| **POA #:** | 70646-23 | **PO #:** | 663107-23 | **Change Order #:** | 8 |
| **Solicitation #:** | CB CP-0098 23 | **Contract #:** | 70646-23 | **Contract ADM #:** | N/A |
| **Term:** | Project Completion | **Options:** | N/A | **Options Used:** | N/A |

| | | | |
|---|---|---|---|
| **Federally Funded:** | No | **JSEB Rec:** | Participation |
| **Licenses Verified:** | Yes | **JSEB %:** | 20 |
| **Bonds Required:** | No | **Bonds Waived Pursuant To:** | N/A |

| | | | | | | | | | | |
|---|---|---|---|---|---|---|---|---|---|---|
| **Fund:** | 32111 | **Center:** | 153101 | **Acct:** | 565051 | **Proj:** | 008972 | **Activity:** | 0000000000 | $ 426,910.35 |
| **Fund:** | 32124 | **Center:** | 153101 | **Acct:** | 565051 | **Proj:** | 008972 | **Activity:** | 0000000000 | $ 730,886.35 |
| **Fund:** | | **Center:** | | **Acct:** | | **Proj:** | | **Activity:** | | $ |

| | | | | | |
|---|---|---|---|---|---|
| **New NTE/GMP:** | $ 40,613,116.22 | **Contingent Amt:** | $ 0.00 | **DMP/ODPO Amt:** | $ 0.00 |

Initial DT
Initial DT

| | | | |
|---|---|---|---|
| **Using Agency/BU:** | PWEN:ENGINEERING AND CONSTRUCTION MANAGEMENT | | |
| **Concurrence:** | Signed by: Scott Carter, P.E. 20991F9ADFC947E... | **Title:** | CHIEF OF ENGINEERING CONSTRUCTION MANAGEMENT 3/18/2026 |
| **Concurrence:** | 1EFA223D5D23487... | **Title:** | DIRECTOR OF PUBLIC WORKS 3/20/2026 |
| **Concurrence:** | | **Title:** | |
| **Concurrence:** | | **Title:** | |

| | | | |
|---|---|---|---|
| **Procurement Analyst/Buyer:** | Signed by: Kemp, Benjamin 4C8860FACE2449C... | **Chief of Procurement:** | Signed by: 3/24/2026 B10F1D517352456... |
| **Name:** | Kemp, Benjamin | **Name:** | Dustin L. Freeman |

| **Part 2 – JPAC Action:** All award actions subject to lawfully appropriated funds. | | **Part 3 – Final Awarding Authority Action:** | |
|---|---|---|---|
| **Members who approve:** | | **Action:** | |
| **Members who disapprove:** | | **Signature:** | |
| **Date:** | | **Date:** | |

Docusign Envelope ID: F54DB230-A150-452A-B3F0-14C4A48C193C

# PAF Instructions
## Part 1 (using agency)

**Form Type:** This form will be used for both Administrative Awards and JPAC Requests. Select type from dropdown options.

**Goods and/or Services:** Enter a brief description of the types of goods and services included in the request.

**Requested Action and Justification:** Enter a brief description of the requested action or authority being sought. i.e.; *Request permission to award the lowest, responsive responsible bidder for an ITB or award the highest ranked supplier for an RFP.* This block should also be used for additional information such as additional 4th account strings, or other information essential for contract execution.

**Supplier:** Enter awarded supplier name**.** If multiple, include in "Requested Action and Justification" box.

**Basis of Award:** Select from Lowest Price Technical Acceptable (LPTA), Highest Price Technical Acceptable (HPTA) or N/A.

**Bid Opening Date:** The date bids were unsealed by Procurement.

**POA #:** This is your 1Cloud generated Agreement number. Select Type, Enter Number.

**PO #:** Enter the PO number or agreement release number.

**Change Order #:** Provide the applicable change order number represented by this request.

**Solicitation #:** Select Prefix type, Enter Number, and Year.

**Contract #:** This number should be the same as your POA number (unless procured prior to 2020)

**Contract Amendment #:** Provide the applicable amendment number represented by this request.

**Term:** Select the Period of Performance or Term for the initial period.

**Options:** Period of time for each renewal or option.

**Options Used:** Prior to this request, enter how many options were already used.

**Federally Funded:** Select yes or no from dropdown if Federal Funds will be used.

**JSEB Rec:** Select Encouragement or JSEB Set Aside Option.

**JESB %:** If JSEB Participation, enter the percentage.

**Bonds Waived Pursuant to:** Select option from Drop down.

**Funding Sources:** Fund/Center/Account/Project/Activity, all fields are required even if zeros.

**New NTE/GMP:** Enter the new total not to exceed amount. Note, this should match the contract maximum indebtedness, if applicable**.**

**Contingent Amount:** If your agency requests an allowance for unforeseen additional expenses, then specify the amount of your requested increase and new NTE that represents the contingency allowance. This is over and above any quote.

**DMP/ODPO Account:** Enter the Direct Materials Purchase/Owner Direct Purchase Order Account. Used mainly for CIP (Capital Improvement/Construction) Projects

**Using Agency/BU:** Select one from the dropdown list.

**Concurrence:** Using Agency internal routing requirements for Electronic Signatures (follow Proc Manual for threshold requirements)

**Title:** Title of person electronically signing form.

**Attachments:** Included any supplemental information to the Procurement Award Form. i.e.; *Scope of work, previous awards*.

**Any field where there is no data available, or no entry is required, either leave it blank or enter N/A. Any fields where there is known data, include for informational purposes. Any changes to an original award should contain the data that is being changed and any other relevant data required for JPAC review and approval.*

Docusign Envelope ID: F54DB230-A150-452A-B3F0-14C4A48C193C



| NBR | MASTER ITEM DESCRIPTION | QUANTITY | UOM | UNIT COST | NET ADDITION | NET DELETION | TOTAL |
|---|---|---|---|---|---|---|---|
| 24 | **ADDITIONAL SCOPE** | | | | | | |
| | Section 1 Design Revision (Internal Struts to Grouted Anchors) | 1 | LS | $222,803.57 | $222,803.57 | | |
| | JUSTIFICATION: The transition to a grouted anchor system necessitated a waler system to distribute anchor loads and maintain sheet pile wall stability—a requirement absent from the original contract documents. To meet these revised criteria, the Contractor furnished and installed additional structural steel, including C10 x 20 channels and W8 x 48 bracing. Consequently, the Contractor requests a 15-day compensable time extension to account for the additional labor and duration required to complete this work (Ref: Pages 2 thru 95). | | | | | | |
| 25 | **DEDUCTION (CREDIT)** | | | | | | |
| | Prefab Weathered Steel Truss Bridges (Deduct) | 1 | LS | | | $598,400.00 | |
| | JUSTIFICATION: The original Section 1 design required the furnishing and installation of seven (7) weathered steel bridges. Through subsequent design revisions, the Engineer reduced this requirement to three (3) units, resulting in the removal of four (4) bridges from the scope of work (Ref: Pages 96–102). | | | | | | |
| 26 | **ADDITIONAL SCOPE** | | | | | | |
| | Additional Materials & Engineering for Weathered Truss Bridges (Section 1) | 1 | LS | $289,573.45 | $289,573.45 | | |
| | JUSTIFICATION: Following the design revision for Section 1, the prefabricated weathered steel struts required a comprehensive redesign. This change rendered previously procured materials and partially fabricated components obsolete. The resulting requirement for additional engineering and remedial fabrication constitutes a formal change in scope; these costs were not included in the original contract sum and result directly from the Engineer's revisions. (Ref: Pages 102 thru 115) | | | | | | |
| 27 | **ADDITIONAL SCOPE** | | | | | | |
| | Disposal of Contaminated Materials in Channel | 1 | LS | $102,308.68 | $102,308.68 | | |
| | JUSTIFICATION: The contractor encountered a differing site condition in the new channel footprint consisting of substantial buried debris that was not shown in the Contract Documents, not anticipated at bid time, and not discoverable through reasonable site review. Removal and disposal of this debris required additional labor, equipment, trucking, and landfill fees beyond the original scope. (Ref: Pages 116 thru 158) | | | | | | |
| 28 | **ADDITIONAL SCOPE** | | | | | | |
| | Reconstruction of RiverWalk Pedestrian Bridge | 1 | LS | $1,961,236.00 | $1,961,236.00 | | |
| | JUSTIFICATION: The City elected to incorporate the Pedestrian Riverwalk reconstruction into the Contractor's scope of work. This additional project required unplanned design and procurement activities, as well as coordination with ongoing channel improvements. As these requirements were not included in the original contract documents, the Contractor is requesting an adjustment for the additional labor, material, and equipment costs incurred to execute this expanded scope. (Ref: Pages 159 thru 215) | | | | | | |
| 29 | **DEDUCTION (CREDIT)** | | | | | | |
| | Elimination of Sand/Muck Layer Over Slab in Section 1 of New Channel (Deduct) | 1 | LS | | | $40,925.00 | |
| | JUSTIFICATION: The removal of this scope reduces the labor, equipment, and material efforts originally planned for the placement of the sand and muck overlay. No additional costs or project delays are associated with this change, as the activity is being fully eliminated. As a result, the contractor is issuing a deductive credit equal to the contract value of the eliminated work. (Ref: Pages 216 thru 220) | | | | | | |
| 30 | **DEDUCTION (CREDIT)** | | | | | | |
| | Arch Culvert Demolition Section 4 (Deduct) | 1 | LS | | | $778,800.00 | |
| | JUSTIFICATION: The Demolition of the existing arch culvert in Section 4 was removed from the contract and replaced with flowable fill stabilization. The contractor hereby issues a credit to the City for $778,800.00, representing the net savings based on the approved Schedule of Values. | | | | | | |
| | **TOTAL ADDITIONAL SCOPE ITEMS** | | | | $2,575,921.70 | | |
| | **TOTAL DEDUCTION ITEMS** | | | | | $1,418,125.00 | |
| | **TOTAL CHANGE ORDER #8** | | | | $1,157,796.70 | | |

Reviewed & Approved
COJ Project Manager
2/20/2026

Docusign Envelope ID: F54DB230-A150-452A-B3F0-14C4A48C193C

# CHANGE ORDER REQUEST #24

# ADDITIONAL WELDING SECTION 1

# MCCOY'S CREEK OUTFALL REALIGNMENT

# COJ CONTRACT NO.: 70646-23

# OCTOBER 14, 2025

Docusign Envelope ID: F54DB230-A150-452A-B3F0-14C4A48C193C

# GAI ENTITLEMENT ANALYSIS

# CHANGE ORDER REQUEST #24

# ADDITIONAL WELDING SECTION 1

# MCCOY'S CREEK OUTFALL REALIGNMENT

# OCTOBER 14, 2025

Docusign Envelope ID: F54DB230-A150-452A-B3F0-14C4A48C193C

# Entitlement Analysis COR #24– Section 1 Design Revision (Internal Struts to Grouted Anchors)

Job Description: McCoy's Creek Outfall Realignment
COJ Contract Number: 70646-23
October 14, 2025

## 1. **Background**

Under the original contract, Section 1 of the project was designed to utilize an internal steel strut system to support the sheet pile wall. During construction, the Engineer issued a design revision that replaced the internal strut system with a grouted anchor system. This design modification represented a material change in both the structural configuration and the means and methods of wall support originally contemplated by JBCCI's contract.

## 2. **Description of Change**

The transition to a grouted anchor system necessitated the addition of a waler system to adequately distribute the anchor loads and maintain the stability of the sheet pile wall. This requirement was not included in the original contract drawings or specifications.
To meet the revised design criteria, JBCCI was required to furnish and install additional structural steel components, including C10 x 20 channel and W8 x 48 bracing, to function as the waler system supporting the grouted anchors.
This additional scope included:

a. Procurement and fabrication of structural steel members;
b. Installation of walers and bracing at each grouted anchor location;
c. Field adjustments, alignment, and welding as required by the revised design; and
d. Coordination with anchor installation activities and inspection procedures.

## 3. **Impact Analysis**

The implementation of this redesign resulted in both cost and schedule impacts to JBCCI's operations.

Cost Impact:
The added scope of furnishing, fabricating, and installing the C10 x 20 channel and W8 x 48 bracing resulted in a total direct cost of $222,803.57. This cost includes materials, labor, equipment, and associated overhead necessary to complete the work. None of these costs were included in the original bid or contract pricing, as the work was not part of the initial design intent. The Contractor's price of $222,803.57 compared favorably with GAI's Engineer's Estimate of $222,923.32, which is a Delta of 119.75 in favor of the City.

Schedule Impact:
The design change disrupted JBCCI's planned construction sequencing by requiring additional time for material procurement, layout verification, welding, and installation of the waler system

Docusign Envelope ID: F54DB230-A150-452A-B3F0-14C4A48C193C

prior to stressing of the anchors. These added steps delayed subsequent critical path activities within Section 1.
JBCCI requests that a compensable time extension of 15 days be granted commensurate with the additional effort and duration necessary to perform the waler installation, to ensure the contract completion date and liquidated damage exposure are not adversely affected.

4. **Entitlement Basis**

This change was initiated by Structural Engineer and represents additional work beyond the original contract scope. JBCCI performed this work in good faith to comply with the Engineer's direction and to maintain project safety and design integrity.
Under the contract's Changes Clause and Differing Site Conditions Clause, JBCCI is entitled to an equitable adjustment for:

a. Additional work not shown or contemplated in the original contract.
b. Delays caused by the Engineer's design modification; and
c. Associated cost and time impacts incurred as a direct result of the redesign.

5. **Conclusion**

The revision from internal steel struts to grouted anchors in Section 1 introduced new design requirements that compelled JBC to furnish and install a complete waler system utilizing C10 x 20 channel and W8 x 48 bracing. This work was necessary, Engineer-directed, and outside the scope of JBCCI's original contract obligations.
Accordingly, JBC respectfully requests an equitable adjustment in the amount of $222,803.57 and a corresponding compensable time extension to account for the additional work and schedule impacts resulting from this design change.

Docusign Envelope ID: F54DB230-A150-452A-B3F0-14C4A48C193C

# GAI ENGINEER'S ESTIMATE

# CHANGE ORDER REQUEST #24

# ADDITIONAL WELDING SECTION 1

# MCCOY'S CREEK OUTFALL REALIGNMENT

# OCTOBER 14, 2025

**ENGINEER'S ESTIMATE OF EXTRA WORK**
**PROJECT**: MCOY'S CREEK OUTFALL REALIGNMENT
**COJ CONTRACT NO.:** 70646-23
**CHANGE ORDER NO.: 8 (COR #24)**
**ISSUE:** Additional Welding and Fabrication for Section 1 Anchors
**DATE**: October 14, 2025

gai consultants
transforming ideas into reality

**LABOR**

| JB COXWELL | | | | | | | |
|---|---|---|---|---|---|---|---|
| **POSITION** | **QTY.** | **UNIT** | **RATE** | **BURDENED RATE** | **EXTENDED COST** | **AMOUNT** | **COMMENT** |
| Superintendent - Burette | 343 | Hours | $ 60.00 | | | $ 20,580.00 | Regular Time |
| Operator - Hays | 343 | Hours | $ 42.00 | | | $ 14,406.00 | Regular Time |
| Lead Man - Gonzzales | 86 | Hours | $ 26.00 | | | $ 2,236.00 | Regular Time |
| Pile Driver - Johns | 86 | Hours | $ 22.00 | | | $ 1,892.00 | Regular Time |
| Welder - Griffin | 343 | Hours | $ 22.00 | | | $ 7,546.00 | Regular Time |
| Welder - Vera | 86 | Hours | $ 23.00 | | | $ 1,978.00 | Regular Time |
| Welder - Cannon | 233 | Hours | $ 24.00 | | | $ 5,592.00 | Regular Time |
| TEMP - Welder - Wery | 182 | Hours | $ 23.00 | | | $ 4,186.00 | Regular Time |
| TEMP - Welder - Hill | 48 | Hours | $ 24.00 | | | $ 1,152.00 | Regular Time |
| TEMP - Welder - Love | 124 | Hours | $ 23.00 | | | $ 2,852.00 | Regular Time |
| | | | | | | $ 62,420.00 | |
| | | | | Markup 15% | | $ 13,423.88 | |
| | | | | 44.52% | | $ 27,789.38 | |
| **LABOR TOTAL** | | | | | | **$ 103,633.26** | |

**EQUIPMENT**

| JB COXWELL | QTY. | UNIT | RATE | BURDENED RATE | EXTENDED COST | AMOUNT | COMMENT |
|---|---|---|---|---|---|---|---|
| Excavator | 343 | Hours | $ 133.37 | | | $ 45,745.91 | |
| Pick-up F-150 | 343 | Hours | $ 45.36 | | | $ 15,558.48 | |
| Welding Machine | 258 | Hours | $ 11.43 | | | $ 2,948.94 | |
| Welding Machine | 343 | Hours | $ 11.43 | | | $ 3,920.49 | |
| Welding Machine | 86 | Hours | $ 11.43 | | | $ 982.98 | |
| Welding Machine | 86 | Hours | $ 11.43 | | | $ 982.98 | |
| | | | | Markup 15% | | $ 10,398.30 | |
| **EQUIPMENT TOTAL** | | | | | | **$ 80,538.08** | |

**MATERIALS**

| JB COXWELL | PAY ITEM NUMBER | UNIT | | QUANTITY | UNIT PRICE | AMOUNT | COMMENT |
|---|---|---|---|---|---|---|---|
| JD Fields Misc Channel and Beams | | LS | | 1 | $ 28,298.40 | $ 28,298.40 | |
| Roberts Oxygen | | LS | | 1 | $ 3,389.70 | $ 3,389.70 | |
| | | | | | | $ - | |
| | | | | | | $ - | |
| | | | | | | $ - | |
| | | | | Tax 7.5% | | $ 2,376.61 | |
| | | | | Delivery | | $ 3,512.00 | |
| **MATERIALS TOTAL** | | | | | | **$37,576.71** | |

**MISCELLANEOUS**

| JB COXWELL | PAY ITEM NUMBER | UNIT | | QUANTITY | UNIT PRICE | AMOUNT | COMMENT: |
|---|---|---|---|---|---|---|---|
| | | | | | | $0.00 | |
| | | | | | | $0.00 | |
| **TOTAL** | | | | | | **$0.00** | |
| **SUBTOTAL** | | | | | | **$221,748.05** | |
| **JB COXWELL MARK-UP** | | | | | | | |
| **SUBTOTAL COST ESTIMATE** | | | | | | **$ 221,748.05** | |
| **BOND** | | | 0.53% | | | **$ 1,175.26** | |
| **TOTAL COST ESTIMATE** | | | | | | **$222,923.32** | |
| Prepared By: | | | | | | | |
| J.Carlton Padgett Jr. E.I., CGC | 14-Oct-25 | | | | | | |
| Project Administrator | Date | | | | | | |
| GAI Consultants Inc. | | | | | | | |
| **JB Coxwell Price Quote** | | | | | | **$222,803.57** | |
| **GAI Engineer's Estimate** | | | | | | **$222,923.32** | |
| **DELTA** | | | | | | **$ (119.75)** | **-0.05%** |

Docusign Envelope ID: F54DB230-A150-452A-B3F0-14C4A48C193C

# GAI DAILY REPORTS OF CONSTRUCTION

# CHANGE ORDER REQUEST #24

# ADDITIONAL WELDING SECTION 1

# MCCOY'S CREEK OUTFALL REALIGNMENT

# OCTOBER 14, 2025

Docusign Envelope ID: F54DB230-A150-452A-B3F0-14C4A48C193C

# CONTRACTOR'S DOCUMENTATION

# CHANGE ORDER REQUEST #12

# ADDITIONAL WELDING SECTION 1

# MCCOY'S CREEK OUTFALL REALIGNMENT

# OCTOBER 14, 2025

Docusign Envelope ID: F54DB230-A150-452A-B3F0-14C4A48C193C

**J.B. Coxwell Contracting, Inc.**
6741 Lloyd Road West
Jacksonville, Florida 32254
Office (904) 786-1120 Fax (904) 783-2970

August 8, 2025

McCoy's Creek Channel Improvements
Additional Welding and Fabrication for Section 1 Anchors

Carl Padgett
GAI Consultants
12574 Flagler Center Blvd
Suite 202
Jacksonville, FL 32258

Project Name: McCoy's Creek Channel Improvements
County: Duval
COJ Contract #: 70646-23
Re: Additional Welding and
Fabrication for Section 1 Anchors

Dear Mr. Padgett:

As you are aware, the design within Section 1 was changed from internal steel struts to grouted anchors. With the installation of the grouted anchors, a waler system had to be furnished and installed to spread the design loads necessary to stabilize the sheet pile wall. JBC had to furnish and install C10 x 20 Channel and W8 x 48 bracing for the grouted anchors that were utilized in a redesign within Section 1. The furnishing and installation of this additional scope of work totals $222,803.57.

JBCCI respectfully requests that 15 days be added to the contract.

If you have any questions, please do not hesitate to contact me.

Respectfully,

**J. B. COXWELL CONTRACTING, INC.**

Garrett Harrison
Director of Structures

Docusign Envelope ID: F54DB230-A150-452A-B3F0-14C4A48C193C

J. B. COXWELL CONTRACTING, INC.
6741 Lloyd Road West, Jacksonville, FL 32254-1249
Telephone (904) 786-1120 * Fax (904) 783-2970

**FORCE ACCOUNT**
**DAILY TIME REPORT**

NAME: Carl Padgett GAI Consultants
MAILING ADDRESS: 12574 Flagler Center Blvd Suite 202
CITY: Jacksonville Fl 32258

Date: September 18, 2024
Our Job No.: 2325
Location: Mccoy's Creek Channel Improvements

Section 1 Welding Beams and C-Channels

Idle Equipment Rate Charged at 50% Blue Book Value

## LABOR

| EMP. NO. | | EMPLOYEE'S NAME | OCCUPATION | HOURS | RATE | AMOUNT |
|---|---|---|---|---|---|---|
| 1 | 6514 | Scott Brunette | Superintendent | 10.0 | $ 60.00 | $ 600.00 |
| 2 | 6513 | Christopher Griffin | Welder | 10.0 | $ 22.00 | $ 220.00 |
| 3 | 6547 | Marvin Hayes | Operator | 10.0 | $ 42.00 | $ 420.00 |
| 4 | 6719 | Quantral Cannon | Welder | 10.0 | $ 24.00 | $ 240.00 |
| 5 | Temp | Andrew Wery | Welder | 10.0 | $ 23.00 | $ 230.00 |
| 6 | | | | | | $ - |
| 7 | | | | | | $ - |
| 8 | | | | | | $ - |
| 9 | | | | | | $ - |
| 10 | | | | | | $ - |
| 11 | | | | | | $ - |
| | | | | SUBTOTAL | | $ 1,710.00 |
| | | | | BURDEN (44.52%) | | $ 761.29 |
| | | | | JBCCI MU 15.0% | | $ 370.69 |
| | | | | LABOR TOTAL | | $ 2,841.99 |

## EQUIPMENT

| EQUIP. NO. | | TYPE OF EQUIPMENT | HOURS | RATE | AMOUNT |
|---|---|---|---|---|---|
| 1 | BHC169 | Excavator | 10.0 | $ 133.37 | $ 1,333.70 |
| 2 | TKP299 | F-150 Pickup Truck | 10.0 | $ 45.36 | $ 453.60 |
| 3 | WLP012 | Welding Machine | 10.0 | $ 11.43 | $ 114.30 |
| 4 | WLP013 | Welding Machine | 10.0 | $ 11.43 | $ 114.30 |
| 5 | | | | | $ - |
| 6 | | | | | $ - |
| 7 | | | | | $ - |
| 8 | | | | | $ - |
| 9 | | | | | $ - |
| | | | EQUIPMENT SUBTOTAL | | $ 2,015.90 |
| | | | JBCCI MU 15.0% | | $ 302.39 |
| | | | EQUIPMENT TOTAL | | $ 2,318.29 |

## MATERIALS

| | DESCRIPTION | QUANTITY | UNIT | PRICE | AMOUNT |
|---|---|---|---|---|---|
| 1 | JD Fields Misc Channel and Beams | 1 | | $ 28,298.40 | $ 28,298.40 |
| 2 | Roberts Oxygen | 1 | | $ 3,389.70 | $ 3,389.70 |
| 3 | | | | | |
| 4 | | | | | $ - |
| | | | MATERIALS SUBTOTAL | | $ 31,688.10 |
| | | | Sales Tax (7.5%) | | $ 2,216.17 |
| | | | Delivery (Non Taxable) | | $ 3,512.00 |
| | | | MATERIALS Mark Up (15.0%) | | $ 5,085.94 |
| | | | MATERIALS TOTAL | | $ 38,992.21 |

## SUBCONTRACTORS

| | DESCRIPTION | QUANTITY | UNIT | PRICE | AMOUNT |
|---|---|---|---|---|---|
| 1 | | | | | $ - |
| | | | SUBCONTRACTS SUBTOTAL | | $ - |
| | | | SUBCONTRACTS MU (10%) | | $ - |
| | | | SUBCONTRACTS TOTAL | | $ - |

DESCRIPTION OF WORK: Installation of 8" Beams and C-Channel in setion 1

| | | |
|---|---|---|
| SUBTOTAL | $ | 44,152.48 |
| 0.53% Bond | $ | 234.01 |
| GRAND TOTAL | $ | 44,386.49 |

J. B. COXWELL CONTRACTING, INC.
6741 Lloyd Road West, Jacksonville, FL 32254-1249
Telephone (904) 786-1120 * Fax (904) 783-2970

**FORCE ACCOUNT**
**DAILY TIME REPORT**

NAME: Carl Padgett GAI Consultants
MAILING ADDRESS: 12574 Flagler Center Blvd Suite 202
CITY: Jacksonville Fl 32258

Date: September 19, 2024
Our Job No.: 2325
Location: Mccoy's Creek Channel Improvements

Section 1 Welding Beams and C-Channels

Idle Equipment Rate Charged at 50% Blue Book Value

## LABOR

| EMP. NO. | | EMPLOYEE'S NAME | OCCUPATION | HOURS | RATE | AMOUNT |
|---|---|---|---|---|---|---|
| 1 | 6514 | Scott Brunette | Superintendent | 10.0 | $ 60.00 | $ 600.00 |
| 2 | 6513 | Christopher Griffin | Welder | 10.0 | $ 22.00 | $ 220.00 |
| 3 | 6547 | Marvin Hayes | Operator | 10.0 | $ 42.00 | $ 420.00 |
| 4 | 6719 | Quantral Cannon | Welder | 10.0 | $ 24.00 | $ 240.00 |
| 5 | Temp | Andrew Wery | Welder | 10.0 | $ 23.00 | $ 230.00 |
| 6 | | | | | | $ - |
| 7 | | | | | | $ - |
| 8 | | | | | | $ - |
| 9 | | | | | | $ - |
| 10 | | | | | | $ - |
| 11 | | | | | | $ - |
| | | | | SUBTOTAL | | $ 1,710.00 |
| | | | | BURDEN (44.52%) | | $ 761.29 |
| | | | | JBCCI MU 15.0% | | $ 370.69 |
| | | | | LABOR TOTAL | | $ 2,841.99 |

## EQUIPMENT

| EQUIP. NO. | | TYPE OF EQUIPMENT | HOURS | RATE | AMOUNT |
|---|---|---|---|---|---|
| 1 | BHC189 | Excavator | 10.0 | $ 133.37 | $ 1,333.70 |
| 2 | TKP299 | F-150 Pickup Truck | 10.0 | $ 45.36 | $ 453.60 |
| 3 | WLP012 | Welding Machine | 10.0 | $ 11.43 | $ 114.30 |
| 4 | WLP013 | Welding Machine | 10.0 | $ 11.43 | $ 114.30 |
| 5 | | | | | $ - |
| 6 | | | | | $ - |
| 7 | | | | | $ - |
| 8 | | | | | $ - |
| 9 | | | | | $ - |
| | | | EQUIPMENT SUBTOTAL | | $ 2,015.90 |
| | | | JBCCI MU 15.0% | | $ 302.39 |
| | | | EQUIPMENT TOTAL | | $ 2,318.29 |

## MATERIALS

| | DESCRIPTION | QUANTITY | UNIT | PRICE | AMOUNT |
|---|---|---|---|---|---|
| 1 | | | | | $ - |
| | | | MATERIALS SUBTOTAL | | $ - |
| | | | Sales Tax (7.5%) | | $ - |
| | | | MATERIALS Mark Up (15.0%) | | $ - |
| | | | MATERIALS TOTAL | | $ - |

## SUBCONTRACTORS

| DESCRIPTION | QUANTITY | UNIT | PRICE | AMOUNT |
|---|---|---|---|---|
| 1 | | | | $ - |
| | | SUBCONTRACTS SUBTOTAL | | $ - |
| | | SUBCONTRACTS MU (10%) | | $ - |
| | | SUBCONTRACTS TOTAL | | $ - |

DESCRIPTION OF WORK: Installation of 8" Beams and C-Channel in setion 1

| | | |
|---|---|---|
| SUBTOTAL | $ | 5,160.27 |
| 0.53% Bond | $ | 27.35 |
| **GRAND TOTAL** | **$** | **5,187.62** |

Report Submitted by: _____

Docusign Envelope ID: F54DB230-A150-452A-B3F0-14C4A48C193C

J. B. COXWELL CONTRACTING, INC.
6741 Lloyd Road West, Jacksonville, FL 32254-1249
Telephone (904) 786-1120 * Fax (904) 783-2970

**FORCE ACCOUNT**
**DAILY TIME REPORT**

NAME: Carl Padgett GAI Consultants
MAILING ADDRESS: 12574 Flagler Center Blvd Suite 202
CITY: Jacksonville Fl. 32258

Date: September 20, 2024
Our Job No.: 2325
Location: Mccoy's Creek Channel Improvements

Section 1 Welding Beams and C-Channels

Idle Equipment Rate Charged at 50% Blue Book Value

## LABOR

| EMP. NO. | | EMPLOYEE'S NAME | OCCUPATION | HOURS | RATE | AMOUNT |
|---|---|---|---|---|---|---|
| 1 | 6514 | Scott Brunette | Superintendent | 10.0 | $ 60.00 | $ 600.00 |
| 2 | 6613 | Christopher Griffin | Welder | 10.0 | $ 22.00 | $ 220.00 |
| 3 | 6547 | Marvin Hayes | Operator | 10.0 | $ 42.00 | $ 420.00 |
| 4 | 6719 | Quantrai Cannon | Welder | 10.0 | $ 24.00 | $ 240.00 |
| 5 | Temp | Andrew Wery | Welder | 10.0 | $ 23.00 | $ 230.00 |
| 6 | | | | | | $ - |
| 7 | | | | | | $ - |
| 8 | | | | | | $ - |
| 9 | | | | | | $ - |
| 10 | | | | | | $ - |
| 11 | | | | | | $ - |
| | | | | SUBTOTAL | | $ 1,710.00 |
| | | | | BURDEN (44.52%) | | $ 761.29 |
| | | | | JBCCI MU 15.0% | | $ 370.69 |
| | | | | LABOR TOTAL | | $ 2,841.99 |

## EQUIPMENT

| EQUIP. NO. | | TYPE OF EQUIPMENT | HOURS | RATE | AMOUNT |
|---|---|---|---|---|---|
| 1 | BHC189 | Excavator | 10.0 | $ 133.37 | $ 1,333.70 |
| 2 | TKP299 | F-150 Pickup Truck | 10.0 | $ 45.36 | $ 453.60 |
| 3 | WLP012 | Welding Machine | 10.0 | $ 11.43 | $ 114.30 |
| 4 | WLP013 | Welding Machine | 10.0 | $ 11.43 | $ 114.30 |
| 5 | | | | | $ - |
| 6 | | | | | $ - |
| 7 | | | | | $ - |
| 8 | | | | | $ - |
| 9 | | | | | $ - |
| | | | EQUIPMENT SUBTOTAL | | $ 2,015.90 |
| | | | JBCCI MU 15.0% | | $ 302.39 |
| | | | EQUIPMENT TOTAL | | $ 2,318.29 |

## MATERIALS

| | DESCRIPTION | QUANTITY | UNIT | PRICE | AMOUNT |
|---|---|---|---|---|---|
| 1 | | | | | $ - |
| | | | MATERIALS SUBTOTAL | | $ - |
| | | | Sales Tax (7.5%) | | $ - |
| | | | MATERIALS Mark Up (15.0%) | | $ - |
| | | | MATERIALS TOTAL | | $ - |

## SUBCONTRACTORS

| | DESCRIPTION | QUANTITY | UNIT | PRICE | AMOUNT |
|---|---|---|---|---|---|
| 1 | | | | | $ - |
| | | | SUBCONTRACTS SUBTOTAL | | $ - |
| | | | SUBCONTRACTS MU (10%) | | $ - |
| | | | SUBCONTRACTS TOTAL | | $ - |

DESCRIPTION OF WORK: Installation of 8" Beams and C-Channel in setion 1

| | | |
|---|---|---|
| SUBTOTAL | $ | 5,160.27 |
| 0.53% Bond | $ | 27.35 |
| **GRAND TOTAL** | **$** | **5,187.62** |

Report Submitted by: _____

Docusign Envelope ID: F54DB230-A150-452A-B3F0-14C4A48C193C

J. B. COXWELL CONTRACTING, INC.
6741 Lloyd Road West, Jacksonville, FL 32254-1249
Telephone (904) 786-1120 * Fax (904) 783-2970

**FORCE ACCOUNT**
**DAILY TIME REPORT**

NAME: Carl Padgett GAI Consultants
MAILING ADDRESS: 12574 Flagler Center Blvd Suite 202
CITY: Jacksonville Fl 32258

Date: September 23, 2024
Our Job No.: 2325
Location: Mccoy's Creek Channel Improvements

Section 1 Welding Beams and C-Channels

Idle Equipment Rate Charged at 50% Blue Book Value

## LABOR

| EMP. NO. | | EMPLOYEE'S NAME | OCCUPATION | HOURS | RATE | AMOUNT |
|---|---|---|---|---|---|---|
| 1 | 8514 | Scott Brunette | Superintendent | 10.0 | $ 60.00 | $ 600.00 |
| 2 | 6613 | Christopher Griffin | Welder | 10.0 | $ 22.00 | $ 220.00 |
| 3 | 6547 | Marvin Hayes | Operator | 10.0 | $ 42.00 | $ 420.00 |
| 4 | 6719 | Quantral Cannon | Welder | 10.0 | $ 24.00 | $ 240.00 |
| 5 | Temp | Andrew Wery | Welder | 10.0 | $ 23.00 | $ 230.00 |
| 6 | | | | | | $ - |
| 7 | | | | | | $ - |
| 8 | | | | | | $ - |
| 9 | | | | | | $ - |
| 10 | | | | | | $ - |
| 11 | | | | | | $ - |
| | | | | SUBTOTAL | | $ 1,710.00 |
| | | | | BURDEN (44.62%) | | $ 761.29 |
| | | | | JBCCI MU 15.0% | | $ 370.69 |
| | | | | LABOR TOTAL | | $ 2,841.99 |

## EQUIPMENT

| EQUIP. NO. | | TYPE OF EQUIPMENT | HOURS | RATE | AMOUNT |
|---|---|---|---|---|---|
| 1 | BHC189 | Excavator | 10.0 | $ 133.37 | $ 1,333.70 |
| 2 | TKP299 | F-150 Pickup Truck | 10.0 | $ 45.36 | $ 453.60 |
| 3 | WLP012 | Welding Machine | 10.0 | $ 11.43 | $ 114.30 |
| 4 | WLP013 | Welding Machine | 10.0 | $ 11.43 | $ 114.30 |
| 5 | | | | | $ - |
| 6 | | | | | $ - |
| 7 | | | | | $ - |
| 8 | | | | | $ - |
| 9 | | | | | $ - |
| | | | EQUIPMENT SUBTOTAL | | $ 2,015.90 |
| | | | JBCCI MU 15.0% | | $ 302.39 |
| | | | EQUIPMENT TOTAL | | $ 2,318.29 |

## MATERIALS

| | DESCRIPTION | QUANTITY | UNIT | PRICE | AMOUNT |
|---|---|---|---|---|---|
| 1 | | | | | $ - |
| | | | MATERIALS SUBTOTAL | | $ - |
| | | | Sales Tax (7.5%) | | $ - |
| | | | MATERIALS Mark Up (15.0%) | | $ - |
| | | | MATERIALS TOTAL | | $ - |

## SUBCONTRACTORS

| | DESCRIPTION | QUANTITY | UNIT | PRICE | AMOUNT |
|---|---|---|---|---|---|
| 1 | | | | | $ - |
| | | | SUBCONTRACTS SUBTOTAL | | $ - |
| | | | SUBCONTRACTS MU (10%) | | $ - |
| | | | SUBCONTRACTS TOTAL | | $ - |

DESCRIPTION OF WORK: Installation of 8" Beams and C-Channel in setion 1

| | | |
|---|---|---|
| SUBTOTAL | $ | 5,160.27 |
| 0.53% Bond | $ | 27.35 |
| **GRAND TOTAL** | **$** | **5,187.62** |

Report Submitted by: _____

Docusign Envelope ID: F54DB230-A150-452A-B3F0-14C4A48C193C

J. B. COXWELL CONTRACTING, INC.
6741 Lloyd Road West, Jacksonville, FL 32254-1249
Telephone (904) 786-1120 * Fax (904) 783-2970

**FORCE ACCOUNT**
**DAILY TIME REPORT**

NAME: Carl Padgett GAI Consultants
MAILING ADDRESS: 12574 Flagler Center Blvd Suite 202
CITY: Jacksonville Fl 32258

Date: September 24, 2024
Our Job No.: 2325
Location: Mccoy's Creek Channel Improvements

Section 1 Welding Beams and C-Channels

Idle Equipment Rate Charged at 50% Blue Book Value

## LABOR

| EMP. NO. | | EMPLOYEE'S NAME | OCCUPATION | HOURS | RATE | AMOUNT |
|---|---|---|---|---|---|---|
| 1 | 6514 | Scott Brunette | Superintendent | 10.0 | $ 60.00 | $ 600.00 |
| 2 | 6513 | Christopher Griffin | Welder | 10.0 | $ 22.00 | $ 220.00 |
| 3 | 8547 | Marvin Hayes | Operator | 10.0 | $ 42.00 | $ 420.00 |
| 4 | 6719 | Quantral Cannon | Welder | 10.0 | $ 24.00 | $ 240.00 |
| 5 | Temp | Andrew Wery | Welder | 10.0 | $ 23.00 | $ 230.00 |
| 6 | | | | | | $ - |
| 7 | | | | | | $ - |
| 8 | | | | | | $ - |
| 9 | | | | | | $ - |
| 10 | | | | | | $ - |
| 11 | | | | | | $ - |
| | | | | SUBTOTAL | | $ 1,710.00 |
| | | | | BURDEN (44.52%) | | $ 761.29 |
| | | | | JBCCI MU 15.0% | | $ 370.69 |
| | | | | LABOR TOTAL | | $ 2,841.99 |

## EQUIPMENT

| EQUIP. NO. | | TYPE OF EQUIPMENT | HOURS | RATE | AMOUNT |
|---|---|---|---|---|---|
| 1 | BHC189 | Excavator | 10.0 | $ 133.37 | $ 1,333.70 |
| 2 | TKP299 | F-150 Pickup Truck | 10.0 | $ 45.36 | $ 453.60 |
| 3 | WLP012 | Welding Machine | 10.0 | $ 11.43 | $ 114.30 |
| 4 | WLP013 | Welding Machine | 10.0 | $ 11.43 | $ 114.30 |
| 5 | | | | | $ - |
| 6 | | | | | $ - |
| 7 | | | | | $ - |
| 8 | | | | | $ - |
| 9 | | | | | $ - |
| | | | EQUIPMENT SUBTOTAL | | $ 2,015.90 |
| | | | JBCCI MU 15.0% | | $ 302.39 |
| | | | EQUIPMENT TOTAL | | $ 2,318.29 |

## MATERIALS

| | DESCRIPTION | QUANTITY | UNIT | PRICE | AMOUNT |
|---|---|---|---|---|---|
| 1 | | | | | $ - |
| | | | MATERIALS SUBTOTAL | | $ - |
| | | | Sales Tax (7.5%) | | $ - |
| | | | MATERIALS Mark Up (15.0%) | | $ - |
| | | | MATERIALS TOTAL | | $ - |

## SUBCONTRACTORS

| DESCRIPTION | QUANTITY | UNIT | PRICE | AMOUNT |
|---|---|---|---|---|
| 1 | | | | $ - |
| | | SUBCONTRACTS SUBTOTAL | | $ - |
| | | SUBCONTRACTS MU (10%) | | $ - |
| | | SUBCONTRACTS TOTAL | | $ - |

DESCRIPTION OF WORK: Installation of 8" Beams and C-Channel in setion 1

| | | |
|---|---|---|
| SUBTOTAL | $ | 5,160.27 |
| 0.53% Bond | $ | 27.35 |
| **GRAND TOTAL** | **$** | **5,187.62** |

Report Submitted by: _____

Docusign Envelope ID: F54DB230-A150-452A-B3F0-14C4A48C193C

J. B. COXWELL CONTRACTING, INC.
6741 Lloyd Road West, Jacksonville, FL 32254-1249
Telephone (904) 786-1120 * Fax (904) 783-2970

**FORCE ACCOUNT**
**DAILY TIME REPORT**

NAME: Carl Padgett GAI Consultants
MAILING ADDRESS: 12574 Flagler Center Blvd Suite 202
CITY: Jacksonville Fl 32258

Date: September 25, 2024
Our Job No.: 2325
Location: Mccoy's Creek Channel Improvements

Section 1 Welding Beams and C-Channels

Idle Equipment Rate Charged at 50% Blue Book Value

## LABOR

| EMP. NO. | | EMPLOYEE'S NAME | OCCUPATION | HOURS | RATE | AMOUNT |
|---|---|---|---|---|---|---|
| 1 | 6514 | Scott Brunette | Superintendent | 10.0 | $ 60.00 | $ 600.00 |
| 2 | 6613 | Christopher Griffin | Welder | 10.0 | $ 22.00 | $ 220.00 |
| 3 | 6547 | Marvin Hayes | Operator | 10.0 | $ 42.00 | $ 420.00 |
| 4 | 6719 | Quantral Cannon | Welder | 10.0 | $ 24.00 | $ 240.00 |
| 5 | Temp | Andrew Wery | Welder | 10.0 | $ 23.00 | $ 230.00 |
| 6 | | | | | | $ - |
| 7 | | | | | | $ - |
| 8 | | | | | | $ - |
| 9 | | | | | | $ - |
| 10 | | | | | | $ - |
| 11 | | | | | | $ - |
| | | | | SUBTOTAL | | $ 1,710.00 |
| | | | | BURDEN (44.62%) | | $ 761.29 |
| | | | | JBCCI MU 15.0% | | $ 370.69 |
| | | | | LABOR TOTAL | | $ 2,841.99 |

## EQUIPMENT

| EQUIP. NO. | | TYPE OF EQUIPMENT | HOURS | RATE | AMOUNT |
|---|---|---|---|---|---|
| 1 | BHC189 | Excavator | 10.0 | $ 133.37 | $ 1,333.70 |
| 2 | TKP299 | F-150 Pickup Truck | 10.0 | $ 45.36 | $ 453.60 |
| 3 | WLP012 | Welding Machine | 10.0 | $ 11.43 | $ 114.30 |
| 4 | WLP013 | Welding Machine | 10.0 | $ 11.43 | $ 114.30 |
| 5 | | | | | $ - |
| 6 | | | | | $ - |
| 7 | | | | | $ - |
| 8 | | | | | $ - |
| 9 | | | | | $ - |
| | | | EQUIPMENT SUBTOTAL | | $ 2,015.90 |
| | | | JBCCI MU 15.0% | | $ 302.39 |
| | | | EQUIPMENT TOTAL | | $ 2,318.29 |

## MATERIALS

| | DESCRIPTION | QUANTITY | UNIT | PRICE | AMOUNT |
|---|---|---|---|---|---|
| 1 | | | | | $ - |
| | | | MATERIALS SUBTOTAL | | $ - |
| | | | Sales Tax (7.5%) | | $ - |
| | | | MATERIALS Mark Up (15.0%) | | $ - |
| | | | MATERIALS TOTAL | | $ - |

## SUBCONTRACTORS

| | DESCRIPTION | QUANTITY | UNIT | PRICE | AMOUNT |
|---|---|---|---|---|---|
| 1 | | | | | $ - |
| | | | SUBCONTRACTS SUBTOTAL | | $ - |
| | | | SUBCONTRACTS MU (10%) | | $ - |
| | | | SUBCONTRACTS TOTAL | | $ - |

DESCRIPTION OF WORK: Installation of 8" Beams and C-Channel in setion 1

| | | |
|---|---|---|
| SUBTOTAL | $ | 5,160.27 |
| 0.53% Bond | $ | 27.35 |
| **GRAND TOTAL** | **$** | **5,187.62** |

Report Submitted by: _____

Docusign Envelope ID: F54DB230-A150-452A-B3F0-14C4A48C193C

J. B. COXWELL CONTRACTING, INC.
6741 Lloyd Road West, Jacksonville, FL 32254-1249
Telephone (904) 786-1120 * Fax (904) 783-2970

**FORCE ACCOUNT**
**DAILY TIME REPORT**

NAME: Carl Padgett GAI Consultants
MAILING ADDRESS: 12574 Flagler Center Blvd Suite 202
CITY: Jacksonville Fl 32258

Date: September 26, 2024
Our Job No.: 2325
Location: Mccoy's Creek Channel Improvements

Section 1 Welding Beams and C-Channels

Idle Equipment Rate Charged at 50% Blue Book Value

## LABOR

| EMP. NO. | | EMPLOYEE'S NAME | OCCUPATION | HOURS | RATE | AMOUNT |
|---|---|---|---|---|---|---|
| 1 | 6514 | Scott Brunette | Superintendent | 5.0 | $ 60.00 | $ 300.00 |
| 2 | 6613 | Christopher Griffin | Welder | 5.0 | $ 22.00 | $ 110.00 |
| 3 | 6547 | Marvin Hayes | Operator | 5.0 | $ 42.00 | $ 210.00 |
| 4 | 8719 | Quantral Cannon | Welder | 5.0 | $ 24.00 | $ 120.00 |
| 5 | Temp | Andrew Wery | Welder | 5.0 | $ 23.00 | $ 115.00 |
| 6 | | | | | | $ - |
| 7 | | | | | | $ - |
| 8 | | | | | | $ - |
| 9 | | | | | | $ - |
| 10 | | | | | | $ - |
| 11 | | | | | | $ - |
| | | | | SUBTOTAL | | $ 855.00 |
| | | | | BURDEN (44.52%) | | $ 380.65 |
| | | | | JBCCI MU 15.0% | | $ 185.35 |
| | | | | LABOR TOTAL | | $ 1,420.99 |

## EQUIPMENT

| EQUIP. NO. | | TYPE OF EQUIPMENT | HOURS | RATE | AMOUNT |
|---|---|---|---|---|---|
| 1 | SHC189 | Excavator | 5.0 | $ 133.37 | $ 666.85 |
| 2 | TKP299 | F-150 Pickup Truck | 5.0 | $ 45.36 | $ 226.80 |
| 3 | WLP012 | Welding Machine | 5.0 | $ 11.43 | $ 57.15 |
| 4 | WLP013 | Welding Machine | 5.0 | $ 11.43 | $ 57.15 |
| 5 | | | | | $ - |
| 6 | | | | | $ - |
| 7 | | | | | $ - |
| 8 | | | | | $ - |
| 9 | | | | | $ - |
| | | | EQUIPMENT SUBTOTAL | | $ 1,007.95 |
| | | | JBCCI MU 15.0% | | $ 151.19 |
| | | | EQUIPMENT TOTAL | | $ 1,159.14 |

## MATERIALS

| | DESCRIPTION | QUANTITY | UNIT | PRICE | AMOUNT |
|---|---|---|---|---|---|
| 1 | | | | | $ - |
| | | | MATERIALS SUBTOTAL | | $ - |
| | | | Sales Tax (7.5%) | | $ - |
| | | | MATERIALS Mark Up (15.0%) | | $ - |
| | | | MATERIALS TOTAL | | $ - |

## SUBCONTRACTORS

| | DESCRIPTION | QUANTITY | UNIT | PRICE | AMOUNT |
|---|---|---|---|---|---|
| 1 | | | | | $ - |
| | | | SUBCONTRACTS SUBTOTAL | | $ - |
| | | | SUBCONTRACTS MU (10%) | | $ - |
| | | | SUBCONTRACTS TOTAL | | $ - |

DESCRIPTION OF WORK: Installation of 8" Beams and C-Channel in setion 1

| | | |
|---|---|---|
| SUBTOTAL | $ | 2,580.14 |
| 0.53% Bond | $ | 13.67 |
| **GRAND TOTAL** | **$** | **2,593.81** |

Report Submitted by: _____

Docusign Envelope ID: F54DB230-A150-452A-B3F0-14C4A48C193C

J. B. COXWELL CONTRACTING, INC.
8741 Lloyd Road West, Jacksonville, FL 32254-1249
Telephone (904) 786-1120 * Fax (904) 783-2970

**FORCE ACCOUNT**
**DAILY TIME REPORT**

NAME: Carl Padgett GAI Consultants
Date: September 27, 2024

MAILING ADDRESS: 12574 Flagler Center Blvd Suite 202
Our Job No.: 2325

CITY: Jacksonville Fl 32258
Location: Mccoy's Creek Channel Improvements

Section 1 Welding Beams and C-Channels

Idle Equipment Rate Charged at 50% Blue Book Value

## LABOR

| EMP. NO. | | EMPLOYEE'S NAME | OCCUPATION | HOURS | RATE | AMOUNT |
|---|---|---|---|---|---|---|
| 1 | 6514 | Scott Brunette | Superintendent | 8.0 | $ 60.00 | $ 480.00 |
| 2 | 6613 | Christopher Griffin | Welder | 8.0 | $ 22.00 | $ 176.00 |
| 3 | 6547 | Marvin Hayes | Operator | 8.0 | $ 42.00 | $ 336.00 |
| 4 | 6719 | Quantral Cannon | Welder | 8.0 | $ 24.00 | $ 192.00 |
| 5 | Temp | Andrew Wery | Welder | 8.0 | $ 23.00 | $ 184.00 |
| 6 | | | | | | $ - |
| 7 | | | | | | $ - |
| 8 | | | | | | $ - |
| 9 | | | | | | $ - |
| 10 | | | | | | $ - |
| 11 | | | | | | $ - |
| | | | | SUBTOTAL | | $ 1,368.00 |
| | | | | BURDEN (44.52%) | | $ 609.03 |
| | | | | JBCCI MU 15.0% | | $ 296.56 |
| | | | | LABOR TOTAL | | $ 2,273.59 |

## EQUIPMENT

| EQUIP. NO. | | TYPE OF EQUIPMENT | HOURS | RATE | AMOUNT |
|---|---|---|---|---|---|
| 1 | BHC189 | Excavator | 8.0 | $ 133.37 | $ 1,066.96 |
| 2 | TKP299 | F-150 Pickup Truck | 8.0 | $ 45.36 | $ 362.88 |
| 3 | WLP012 | Welding Machine | 8.0 | $ 11.43 | $ 91.44 |
| 4 | WLP013 | Welding Machine | 8.0 | $ 11.43 | $ 91.44 |
| 5 | | | | | $ - |
| 6 | | | | | $ - |
| 7 | | | | | $ - |
| 8 | | | | | $ - |
| 9 | | | | | $ - |
| | | | | EQUIPMENT SUBTOTAL | $ 1,612.72 |
| | | | | JBCCI MU 15.0% | $ 241.91 |
| | | | | EQUIPMENT TOTAL | $ 1,854.63 |

## MATERIALS

| | DESCRIPTION | QUANTITY | UNIT | PRICE | AMOUNT |
|---|---|---|---|---|---|
| 1 | | | | | $ - |
| | | | | MATERIALS SUBTOTAL | $ - |
| | | | | Sales Tax (7.5%) | $ - |
| | | | | MATERIALS Mark Up (15.0%) | $ - |
| | | | | MATERIALS TOTAL | $ - |

## SUBCONTRACTORS

| | DESCRIPTION | QUANTITY | UNIT | PRICE | AMOUNT |
|---|---|---|---|---|---|
| 1 | | | | | $ - |
| | | | | SUBCONTRACTS SUBTOTAL | $ - |
| | | | | SUBCONTRACTS MU (10%) | $ - |
| | | | | SUBCONTRACTS TOTAL | $ - |

DESCRIPTION OF WORK: Installation of 8" Beams and C-Channel in section 1

| | | |
|---|---|---|
| SUBTOTAL | $ | 4,128.22 |
| 0.53% Bond | $ | 21.88 |
| **GRAND TOTAL** | **$** | **4,150.10** |

Report Submitted by: _____

Docusign Envelope ID: F54DB230-A150-452A-B3F0-14C4A48C193C

J. B. COXWELL CONTRACTING, INC.
6741 Lloyd Road West, Jacksonville, FL 32254-1249
Telephone (904) 786-1120 * Fax (904) 783-2970

**FORCE ACCOUNT**
**DAILY TIME REPORT**

NAME: Carl Padgett GAI Consultants
MAILING ADDRESS: 12574 Flagler Center Blvd Suite 202
CITY: Jacksonville Fl 32258

Date: September 30, 2024
Our Job No.: 2325
Location: Mccoy's Creek Channel Improvements

Section 1 Welding Beams and C-Channels

Idle Equipment Rate Charged at 50% Blue Book Value

## LABOR

| EMP. NO. | | EMPLOYEE'S NAME | OCCUPATION | HOURS | RATE | AMOUNT |
|---|---|---|---|---|---|---|
| 1 | 6514 | Scott Brunette | Superintendent | 10.0 | $ 60.00 | $ 600.00 |
| 2 | 6613 | Christopher Griffin | Welder | 10.0 | $ 22.00 | $ 220.00 |
| 3 | 6547 | Marvin Hayes | Operator | 10.0 | $ 42.00 | $ 420.00 |
| 4 | 6719 | Quantral Cannon | Welder | 10.0 | $ 24.00 | $ 240.00 |
| 5 | Temp | Andrew Wary | Welder | 5.0 | $ 23.00 | $ 115.00 |
| 6 | TEMP | Gregory Hill | Welder | 10.0 | $ 24.00 | $ 240.00 |
| 7 | | | | | | $ - |
| 8 | | | | | | $ - |
| 9 | | | | | | $ - |
| 10 | | | | | | $ - |
| 11 | | | | | | $ - |
| | | | | SUBTOTAL | | $ 1,835.00 |
| | | | | BURDEN (44.52%) | | $ 816.94 |
| | | | | JBCCI MU 15.0% | | $ 397.79 |
| | | | | LABOR TOTAL | | $ 3,049.73 |

## EQUIPMENT

| EQUIP. NO. | | TYPE OF EQUIPMENT | HOURS | RATE | AMOUNT |
|---|---|---|---|---|---|
| 1 | BHC189 | Excavator | 10.0 | $ 133.37 | $ 1,333.70 |
| 2 | TKP299 | F-150 Pickup Truck | 10.0 | $ 45.36 | $ 453.60 |
| 3 | WLP012 | Welding Machine | 10.0 | $ 11.43 | $ 114.30 |
| 4 | WLP013 | Welding Machine | 10.0 | $ 11.43 | $ 114.30 |
| 5 | | | | | $ - |
| 6 | | | | | $ - |
| 7 | | | | | $ - |
| 8 | | | | | $ - |
| 9 | | | | | $ - |
| | | | EQUIPMENT SUBTOTAL | | $ 2,015.90 |
| | | | JBCCI MU 15.0% | | $ 302.39 |
| | | | EQUIPMENT TOTAL | | $ 2,318.29 |

## MATERIALS

| | DESCRIPTION | QUANTITY | UNIT | PRICE | AMOUNT |
|---|---|---|---|---|---|
| 1 | | | | | $ - |
| | | | MATERIALS SUBTOTAL | | $ - |
| | | | Sales Tax (7.5%) | | $ - |
| | | | MATERIALS Mark Up (15.0%) | | $ - |
| | | | MATERIALS TOTAL | | $ - |

## SUBCONTRACTORS

| | DESCRIPTION | QUANTITY | UNIT | PRICE | AMOUNT |
|---|---|---|---|---|---|
| 1 | | | | | $ - |
| | | | SUBCONTRACTS SUBTOTAL | | $ - |
| | | | SUBCONTRACTS MU (10%) | | $ - |
| | | | SUBCONTRACTS TOTAL | | $ - |

DESCRIPTION OF WORK: Installation of 8" Beams and C-Channel in setion 1

| | | |
|---|---|---|
| SUBTOTAL | $ | 5,368.02 |
| 0.53% Bond | $ | 28.45 |
| **GRAND TOTAL** | **$** | **5,396.47** |

Report Submitted by: _____

Docusign Envelope ID: F54DB230-A150-452A-B3F0-14C4A48C193C

J. B. COXWELL CONTRACTING, INC.
6741 Lloyd Road West, Jacksonville, FL 32254-1249
Telephone (904) 786-1120 * Fax (904) 783-2970

**FORCE ACCOUNT**
**DAILY TIME REPORT**

NAME: Carl Padgett GAI Consultants
MAILING ADDRESS: 12574 Flagler Center Blvd Suite 202
CITY: Jacksonville Fl 32258

Date: October 1 2024
Our Job No.: 2325
Location: Mccoy's Creek Channel Improvements

Section 1 Welding Beams and C-Channels

Idle Equipment Rate Charged at 50% Blue Book Value

## LABOR

| EMP. NO. | | EMPLOYEE'S NAME | OCCUPATION | HOURS | RATE | AMOUNT |
|---|---|---|---|---|---|---|
| 1 | 6514 | Scott Brunette | Superintendent | 10.0 | $ 60.00 | $ 600.00 |
| 2 | 6613 | Christopher Griffin | Welder | 10.0 | $ 22.00 | $ 220.00 |
| 3 | 6547 | Marvin Hayes | Operator | 10.0 | $ 42.00 | $ 420.00 |
| 4 | 6719 | Quantras Cannon | Welder | 10.0 | $ 24.00 | $ 240.00 |
| 5 | TEMP | Andrew Wery | Welder | 5.0 | $ 23.00 | $ 115.00 |
| 6 | TEMP | Gregory Hill | Welder | 10.0 | $ 24.00 | $ 240.00 |
| 7 | | | | | | $ - |
| 8 | | | | | | $ - |
| 9 | | | | | | $ - |
| 10 | | | | | | $ - |
| 11 | | | | | | $ - |
| | | | | SUBTOTAL | | $ 1,835.00 |
| | | | | BURDEN (44.52%) | | $ 816.94 |
| | | | | JBCCI MU 15.0% | | $ 397.79 |
| | | | | LABOR TOTAL | | $ 3,049.73 |

## EQUIPMENT

| EQUIP. NO. | | TYPE OF EQUIPMENT | HOURS | RATE | AMOUNT |
|---|---|---|---|---|---|
| 1 | BHC189 | Excavator | 10.0 | $ 133.37 | $ 1,333.70 |
| 2 | TKP299 | F-150 Pickup Truck | 10.0 | $ 45.36 | $ 453.60 |
| 3 | WLP012 | Welding Machine | 10.0 | $ 11.43 | $ 114.30 |
| 4 | WLP013 | Welding Machine | 10.0 | $ 11.43 | $ 114.30 |
| 5 | | | | | $ - |
| 6 | | | | | $ - |
| 7 | | | | | $ - |
| 8 | | | | | $ - |
| 9 | | | | | $ - |
| | | | EQUIPMENT SUBTOTAL | | $ 2,015.90 |
| | | | JBCCI MU 15.0% | | $ 302.39 |
| | | | EQUIPMENT TOTAL | | $ 2,318.29 |

## MATERIALS

| | DESCRIPTION | QUANTITY | UNIT | PRICE | AMOUNT |
|---|---|---|---|---|---|
| 1 | | | | | $ - |
| | | | MATERIALS SUBTOTAL | | $ - |
| | | | Sales Tax (7.5%) | | $ - |
| | | | MATERIALS Mark Up (15.0%) | | $ - |
| | | | MATERIALS TOTAL | | $ - |

## SUBCONTRACTORS

| | DESCRIPTION | QUANTITY | UNIT | PRICE | AMOUNT |
|---|---|---|---|---|---|
| 1 | | | | | $ - |
| | | | SUBCONTRACTS SUBTOTAL | | $ - |
| | | | SUBCONTRACTS MU (10%) | | $ - |
| | | | SUBCONTRACTS TOTAL | | $ - |

DESCRIPTION OF WORK: Installation of 8" Beams and C-Channel in setion 1

| | | |
|---|---|---|
| SUBTOTAL | $ | 5,368.02 |
| 0.53% Bond | $ | 28.45 |
| **GRAND TOTAL** | **$** | **5,396.47** |

Report Submitted by: _____

Docusign Envelope ID: F54DB230-A150-452A-B3F0-14C4A48C193C

J. B. COXWELL CONTRACTING, INC.
6741 Lloyd Road West, Jacksonville, FL 32254-1249
Telephone (904) 786-1120 * Fax (904) 783-2970

**FORCE ACCOUNT**
**DAILY TIME REPORT**

NAME: Carl Padgett GAI Consultants
MAILING ADDRESS: 12574 Flagler Center Blvd Suite 202
CITY: Jacksonville Fl. 32258

Date: October 2, 2024
Our Job No.: 2325
Location: Mccoy's Creek Channel Improvements

Section 1 Welding Beams and C-Channels

Idle Equipment Rate Charged at 50% Blue Book Value

## LABOR

| EMP. NO. | | EMPLOYEE'S NAME | OCCUPATION | HOURS | RATE | AMOUNT |
|---|---|---|---|---|---|---|
| 1 | 6514 | Scott Brunette | Superintendent | 10.0 | $ 60.00 | $ 600.00 |
| 2 | 6613 | Christopher Griffin | Welder | 10.0 | $ 22.00 | $ 220.00 |
| 3 | 6547 | Marvin Hayes | Operator | 10.0 | $ 42.00 | $ 420.00 |
| 4 | 6719 | Quantral Cannon | Welder | 10.0 | $ 24.00 | $ 240.00 |
| 5 | TEMP | Andrew Wary | Welder | 8.0 | $ 23.00 | $ - |
| 6 | TEMP | Gregory Hill | Welder | 10.0 | $ 24.00 | $ 240.00 |
| 7 | | | | | | $ - |
| 8 | | | | | | $ - |
| 9 | | | | | | $ - |
| 10 | | | | | | $ - |
| 11 | | | | | | $ - |
| | | | | SUBTOTAL | | $ 1,720.00 |
| | | | | BURDEN (44.52%) | | $ 765.74 |
| | | | | JBCCI MU 15.0% | | $ 372.86 |
| | | | | LABOR TOTAL | | $ 2,858.61 |

## EQUIPMENT

| EQUIP. NO. | | TYPE OF EQUIPMENT | HOURS | RATE | AMOUNT |
|---|---|---|---|---|---|
| 1 | BHC189 | Excavator | 10.0 | $ 133.37 | $ 1,333.70 |
| 2 | TKP299 | F-150 Pickup Truck | 10.0 | $ 45.36 | $ 453.60 |
| 3 | WLP012 | Welding Machine | 10.0 | $ 11.43 | $ 114.30 |
| 4 | WLP013 | Welding Machine | 10.0 | $ 11.43 | $ 114.30 |
| 5 | | | | | $ - |
| 6 | | | | | $ - |
| 7 | | | | | $ - |
| 8 | | | | | $ - |
| 9 | | | | | $ - |
| | | | EQUIPMENT SUBTOTAL | | $ 2,015.90 |
| | | | JBCCI MU 15.0% | | $ 302.39 |
| | | | EQUIPMENT TOTAL | | $ 2,318.29 |

## MATERIALS

| | DESCRIPTION | QUANTITY | UNIT | PRICE | AMOUNT |
|---|---|---|---|---|---|
| 1 | | | | | $ - |
| | | | MATERIALS SUBTOTAL | | $ - |
| | | | Sales Tax (7.5%) | | $ - |
| | | | MATERIALS Mark Up (15.0%) | | $ - |
| | | | MATERIALS TOTAL | | $ - |

## SUBCONTRACTORS

| | DESCRIPTION | QUANTITY | UNIT | PRICE | AMOUNT |
|---|---|---|---|---|---|
| 1 | | | | | $ - |
| | | | SUBCONTRACTS SUBTOTAL | | $ - |
| | | | SUBCONTRACTS MU (10%) | | $ - |
| | | | SUBCONTRACTS TOTAL | | $ - |

DESCRIPTION OF WORK: Installation of 8" Beams and C-Channel in setion 1

| | | |
|---|---|---|
| SUBTOTAL | $ | 5,176.89 |
| 0.53% Bond | $ | 27.44 |
| **GRAND TOTAL** | **$** | **5,204.33** |

Report Submitted by: _____

Docusign Envelope ID: F54DB230-A150-452A-B3F0-14C4A48C193C

J. B. COXWELL CONTRACTING, INC.
6741 Lloyd Road West, Jacksonville, FL 32254-1249
Telephone (904) 786-1120 * Fax (904) 783-2970

**FORCE ACCOUNT**
**DAILY TIME REPORT**

NAME: Carl Padgett GAI Consultants
Date: October 3, 2024
MAILING ADDRESS: 12574 Flagler Center Blvd Suite 202
Our Job No.: 2325
CITY: Jacksonville Fl. 32258
Location: Mccoy's Creek Channel Improvements

Section 1 Welding Beams and C-Channels

Idle Equipment Rate Charged at 50% Blue Book Value

## LABOR

| EMP. NO. | | EMPLOYEE'S NAME | OCCUPATION | HOURS | RATE | AMOUNT |
|---|---|---|---|---|---|---|
| 1 | 6514 | Scott Brunette | Superintendent | 10.0 | $ 60.00 | $ 600.00 |
| 2 | 6613 | Christopher Griffin | Welder | 10.0 | $ 22.00 | $ 220.00 |
| 3 | 6547 | Marvin Hayes | Operator | 10.0 | $ 42.00 | $ 420.00 |
| 4 | 6719 | Quantral Cannon | Welder | 10.0 | $ 24.00 | $ 240.00 |
| 5 | TEMP | Andrew Wery | Welder | 0.0 | $ 23.00 | $ - |
| 6 | TEMP | Gregory Hill | Welder | 10.0 | $ 24.00 | $ 240.00 |
| 7 | | | | | | $ - |
| 8 | | | | | | $ - |
| 9 | | | | | | $ - |
| 10 | | | | | | $ - |
| 11 | | | | | | $ - |
| | | | | SUBTOTAL | | $ 1,720.00 |
| | | | | BURDEN (44.52%) | | $ 765.74 |
| | | | | JBCCI MU 15.0% | | $ 372.86 |
| | | | | LABOR TOTAL | | $ 2,858.61 |

## EQUIPMENT

| EQUIP. NO. | | TYPE OF EQUIPMENT | HOURS | RATE | AMOUNT |
|---|---|---|---|---|---|
| 1 | BHC189 | Excavator | 10.0 | $ 133.37 | $ 1,333.70 |
| 2 | TKP299 | F-150 Pickup Truck | 10.0 | $ 45.36 | $ 453.60 |
| 3 | WLP012 | Welding Machine | 10.0 | $ 11.43 | $ 114.30 |
| 4 | WLP013 | Welding Machine | 10.0 | $ 11.43 | $ 114.30 |
| 5 | | | | | $ - |
| 6 | | | | | $ - |
| 7 | | | | | $ - |
| 8 | | | | | $ - |
| 9 | | | | | $ - |
| | | | EQUIPMENT SUBTOTAL | | $ 2,015.90 |
| | | | JBCCI MU 15.0% | | $ 302.39 |
| | | | EQUIPMENT TOTAL | | $ 2,318.29 |

## MATERIALS

| | DESCRIPTION | QUANTITY | UNIT | PRICE | AMOUNT |
|---|---|---|---|---|---|
| 1 | | | | | $ - |
| | | | MATERIALS SUBTOTAL | | $ - |
| | | | Sales Tax (7.5%) | | $ - |
| | | | MATERIALS Mark Up (15.0%) | | $ - |
| | | | MATERIALS TOTAL | | $ - |

## SUBCONTRACTORS

| | DESCRIPTION | QUANTITY | UNIT | PRICE | AMOUNT |
|---|---|---|---|---|---|
| 1 | | | | | $ - |
| | | | SUBCONTRACTS SUBTOTAL | | $ - |
| | | | SUBCONTRACTS MU (10%) | | $ - |
| | | | SUBCONTRACTS TOTAL | | $ - |

DESCRIPTION OF WORK: Installation of 8" Beams and C-Channel in section 1

| | | |
|---|---|---|
| SUBTOTAL | $ | 5,176.89 |
| 0.53% Bond | $ | 27.44 |
| GRAND TOTAL | $ | 5,204.33 |

Report Submitted by:

Docusign Envelope ID: F54DB230-A150-452A-B3F0-14C4A48C193C

J. B. COXWELL CONTRACTING, INC.
6741 Lloyd Road West, Jacksonville, FL 32254-1249
Telephone (904) 786-1126 * Fax (904) 783-2970

**FORCE ACCOUNT**
**DAILY TIME REPORT**

NAME: Carl Padgett GAI Consultants
Date: October 4, 2024

MAILING ADDRESS: 12574 Flagler Center Blvd Suite 202
Our Job No.: 2325

CITY: Jacksonville Fl. 32258
Location: Mccoy's Creek Channel Improvements

Section 1 Welding Beams and C-Channels

Idle Equipment Rate Charged at 50% Blue Book Value

## LABOR

| EMP. NO. | | EMPLOYEE'S NAME | OCCUPATION | HOURS | RATE | AMOUNT |
|---|---|---|---|---|---|---|
| 1 | 6514 | Scott Brunette | Superintendent | 8.0 | $ 60.00 | $ 480.00 |
| 2 | 6613 | Christopher Griffin | Welder | 8.0 | $ 22.00 | $ 176.00 |
| 3 | 6547 | Marvin Hayes | Operator | 8.0 | $ 42.00 | $ 336.00 |
| 4 | 6719 | Quantral Cannon | Welder | 8.0 | $ 24.00 | $ 192.00 |
| 5 | TEMP | Andrew Wery | Welder | 0.0 | $ 23.00 | $ - |
| 6 | TEMP | Gregory Hill | Welder | 8.0 | $ 24.00 | $ 192.00 |
| 7 | | | | | | $ - |
| 8 | | | | | | $ - |
| 9 | | | | | | $ - |
| 10 | | | | | | $ - |
| 11 | | | | | | $ - |
| | | | | SUBTOTAL | | $ 1,376.00 |
| | | | | BURDEN (44.52%) | | $ 612.60 |
| | | | | JBCCI MU 15.0% | | $ 298.29 |
| | | | | LABOR TOTAL | | $ 2,286.88 |

## EQUIPMENT

| EQUIP. NO. | | TYPE OF EQUIPMENT | HOURS | RATE | AMOUNT |
|---|---|---|---|---|---|
| 1 | BHC188 | Excavator | 8.0 | $ 133.37 | $ 1,066.96 |
| 2 | TKP298 | F-150 Pickup Truck | 8.0 | $ 45.36 | $ 362.88 |
| 3 | WLP012 | Welding Machine | 8.0 | $ 11.43 | $ 91.44 |
| 4 | WLP013 | Welding Machine | 8.0 | $ 11.43 | $ 91.44 |
| 5 | | | | | $ - |
| 6 | | | | | $ - |
| 7 | | | | | $ - |
| 8 | | | | | $ - |
| 9 | | | | | $ - |
| | | | EQUIPMENT SUBTOTAL | | $ 1,612.72 |
| | | | JBCCI MU 15.0% | | $ 241.91 |
| | | | EQUIPMENT TOTAL | | $ 1,854.63 |

## MATERIALS

| | DESCRIPTION | QUANTITY | UNIT | PRICE | AMOUNT |
|---|---|---|---|---|---|
| 1 | | | | | $ - |
| | | | MATERIALS SUBTOTAL | | $ - |
| | | | Sales Tax (7.5%) | | $ - |
| | | | MATERIALS Mark Up (15.0%) | | $ - |
| | | | MATERIALS TOTAL | | $ - |

## SUBCONTRACTORS

| | DESCRIPTION | QUANTITY | UNIT | PRICE | AMOUNT |
|---|---|---|---|---|---|
| 1 | | | | | $ - |
| | | | SUBCONTRACTS SUBTOTAL | | $ - |
| | | | SUBCONTRACTS MU (10%) | | $ - |
| | | | SUBCONTRACTS TOTAL | | $ - |

DESCRIPTION OF WORK: Installation of 8" Beams and C-Channel in setion 1

| | | |
|---|---|---|
| SUBTOTAL | $ | 4,141.51 |
| 0.53% Bond | $ | 21.95 |
| **GRAND TOTAL** | **$** | **4,163.46** |

Report Submitted by: _____

Docusign Envelope ID: F54DB230-A150-452A-B3F0-14C4A48C193C

J. B. COXWELL CONTRACTING, INC.
6741 Lloyd Road West, Jacksonville, FL 32254-1249
Telephone (904) 786-1120 * Fax (904) 783-2970

**FORCE ACCOUNT**
**DAILY TIME REPORT**

NAME: Carl Padgett GAI Consultants
MAILING ADDRESS: 12574 Flagler Center Blvd Suite 202
CITY: Jacksonville Fl. 32258

Date: October 7, 2024
Our Job No.: 2325
Location: Mccoy's Creek Channel Improvements

Section 1 Welding Beams and C-Channels

Idle Equipment Rate Charged at 50% Blue Book Value

## LABOR

| EMP. NO. | | EMPLOYEE'S NAME | OCCUPATION | HOURS | RATE | AMOUNT |
|---|---|---|---|---|---|---|
| 1 | 6514 | Scott Brunette | Superintendent | 10.0 | $ 60.00 | $ 600.00 |
| 2 | 6613 | Christopher Griffin | Welder | 10.0 | $ 22.00 | $ 220.00 |
| 3 | 6547 | Marvin Hayes | Operator | 10.0 | $ 42.00 | $ 420.00 |
| 4 | 6719 | Quantcat Cannon | Welder | 0.0 | $ 24.00 | $ - |
| 5 | TEMP | Andrew Wery | Welder | 10.0 | $ 23.00 | $ 230.00 |
| 6 | TEMP | Noah Love | Welder | 10.0 | $ 23.00 | $ 230.00 |
| 7 | | | | | | $ - |
| 8 | | | | | | $ - |
| 9 | | | | | | $ - |
| 10 | | | | | | $ - |
| 11 | | | | | | $ - |
| | | | | SUBTOTAL | | $ 1,700.00 |
| | | | | BURDEN (44.52%) | | $ 756.84 |
| | | | | JBCCI MU 15.0% | | $ 368.53 |
| | | | | LABOR TOTAL | | $ 2,825.37 |

## EQUIPMENT

| EQUIP. NO. | | TYPE OF EQUIPMENT | HOURS | RATE | AMOUNT |
|---|---|---|---|---|---|
| 1 | BHC169 | Excavator | 10.0 | $ 133.37 | $ 1,333.70 |
| 2 | TKP299 | F-150 Pickup Truck | 10.0 | $ 45.36 | $ 453.60 |
| 3 | WLP012 | Welding Machine | 10.0 | $ 11.43 | $ 114.30 |
| 4 | WLP013 | Welding Machine | 10.0 | $ 11.43 | $ 114.30 |
| 5 | | | | | $ - |
| 6 | | | | | $ - |
| 7 | | | | | $ - |
| 8 | | | | | $ - |
| 9 | | | | | $ - |
| | | | EQUIPMENT SUBTOTAL | | $ 2,015.90 |
| | | | JBCCI MU 15.0% | | $ 302.39 |
| | | | EQUIPMENT TOTAL | | $ 2,318.29 |

## MATERIALS

| | DESCRIPTION | QUANTITY | UNIT | PRICE | AMOUNT |
|---|---|---|---|---|---|
| 1 | | | | | $ - |
| | | | MATERIALS SUBTOTAL | | $ - |
| | | | Sales Tax (7.5%) | | $ - |
| | | | MATERIALS Mark Up (15.0%) | | $ - |
| | | | MATERIALS TOTAL | | $ - |

## SUBCONTRACTORS

| | DESCRIPTION | QUANTITY | UNIT | PRICE | AMOUNT |
|---|---|---|---|---|---|
| 1 | | | | | $ - |
| | | | SUBCONTRACTS SUBTOTAL | | $ - |
| | | | SUBCONTRACTS MU (10%) | | $ - |
| | | | SUBCONTRACTS TOTAL | | $ - |

DESCRIPTION OF WORK: Installation of 8" Beams and C-Channel in sotion 1

| | | |
|---|---|---|
| SUBTOTAL | $ | 5,143.65 |
| 0.53% Bond | $ | 27.26 |
| **GRAND TOTAL** | **$** | **5,170.91** |

Report Submitted by: _____

Docusign Envelope ID: F54DB230-A150-452A-B3F0-14C4A48C193C

J. B. COXWELL CONTRACTING, INC.
6741 Lloyd Road West, Jacksonville, FL 32254-1249
Telephone (904) 786-1120 * Fax (904) 783-2970

**FORCE ACCOUNT**
**DAILY TIME REPORT**

NAME: Carl Padgett GAI Consultants
MAILING ADDRESS: 12574 Flagler Center Blvd Suite 202
CITY: Jacksonville Fl 32258

Date: October 8, 2025
Our Job No.: 2326
Location: Mccoy's Creek Channel Improvements

Section 1 Welding Beams and C-Channels

Idle Equipment Rate Charged at 50% Blue Book Value

## LABOR

| EMP. NO. | | EMPLOYEE'S NAME | OCCUPATION | HOURS | RATE | AMOUNT |
|---|---|---|---|---|---|---|
| 1 | 6514 | Scott Brunette | Superintendent | 10.0 | $ 60.00 | $ 600.00 |
| 2 | 6613 | Christopher Griffin | Welder | 10.0 | $ 22.00 | $ 220.00 |
| 3 | 6547 | Marvin Hayes | Operator | 10.0 | $ 42.00 | $ 420.00 |
| 4 | 6719 | Quantrai Cannon | Welder | 0.0 | $ 24.00 | $ - |
| 5 | TEMP | Andrew Wery | Welder | 10.0 | $ 23.00 | $ 230.00 |
| 6 | TEMP | Noah Love | Welder | 10.0 | $ 23.00 | $ 230.00 |
| 7 | | | | | | $ - |
| 8 | | | | | | $ - |
| 9 | | | | | | $ - |
| 10 | | | | | | $ - |
| 11 | | | | | | $ - |
| | | | | SUBTOTAL | | $ 1,700.00 |
| | | | | BURDEN (44.52%) | | $ 756.84 |
| | | | | JBCCI MU 15.0% | | $ 368.53 |
| | | | | LABOR TOTAL | | $ 2,825.37 |

## EQUIPMENT

| EQUIP. NO. | | TYPE OF EQUIPMENT | HOURS | RATE | AMOUNT |
|---|---|---|---|---|---|
| 1 | BHC189 | Excavator | 10.0 | $ 133.37 | $ 1,333.70 |
| 2 | TKP299 | F-150 Pickup Truck | 10.0 | $ 45.36 | $ 453.60 |
| 3 | WLP012 | Welding Machine | 10.0 | $ 11.43 | $ 114.30 |
| 4 | WLP013 | Welding Machine | 10.0 | $ 11.43 | $ 114.30 |
| 5 | | | | | $ - |
| 6 | | | | | $ - |
| 7 | | | | | $ - |
| 8 | | | | | $ - |
| 9 | | | | | $ - |
| | | | EQUIPMENT SUBTOTAL | | $ 2,015.90 |
| | | | JBCCI MU 15.0% | | $ 302.39 |
| | | | EQUIPMENT TOTAL | | $ 2,318.29 |

## MATERIALS

| | DESCRIPTION | QUANTITY | UNIT | PRICE | AMOUNT |
|---|---|---|---|---|---|
| 1 | | | | | $ - |
| | | | MATERIALS SUBTOTAL | | $ - |
| | | | Sales Tax (7.5%) | | $ - |
| | | | MATERIALS Mark Up (15.0%) | | $ - |
| | | | MATERIALS TOTAL | | $ - |

## SUBCONTRACTORS

| | DESCRIPTION | QUANTITY | UNIT | PRICE | AMOUNT |
|---|---|---|---|---|---|
| 1 | | | | | $ - |
| | | | SUBCONTRACTS SUBTOTAL | | $ - |
| | | | SUBCONTRACTS MU (10%) | | $ - |
| | | | SUBCONTRACTS TOTAL | | $ - |

DESCRIPTION OF WORK: Installation of 8" Beams and C-Channel in setion 1

| | | |
|---|---|---|
| SUBTOTAL | $ | 5,143.65 |
| 0.53% Bond | $ | 27.26 |
| **GRAND TOTAL** | **$** | **5,170.91** |

Report Submitted by: _____

Docusign Envelope ID: F54DB230-A150-452A-B3F0-14C4A48C193C

J. B. COXWELL CONTRACTING, INC.
6741 Lloyd Road West, Jacksonville, FL 32254-1249
Telephone (904) 786-1120 * Fax (904) 783-2970

**FORCE ACCOUNT**
**DAILY TIME REPORT**

NAME: Carl Padgett GAI Consultants
MAILING ADDRESS: 12574 Flagler Center Blvd Suite 202
CITY: Jacksonville Fl 32258

Date: October 9, 2025
Our Job No.: 2325
Location: Mccoy's Creek Channel Improvements

Section 1 Welding Beams and C-Channels

Idle Equipment Rate Charged at 50% Blue Book Value

## LABOR

| EMP. NO. | | EMPLOYEE'S NAME | OCCUPATION | HOURS | RATE | AMOUNT |
|---|---|---|---|---|---|---|
| 1 | 6514 | Scott Brunette | Superintendent | 4.0 | $ 60.00 | $ 240.00 |
| 2 | 6613 | Christopher Griffin | Welder | 4.0 | $ 22.00 | $ 88.00 |
| 3 | 6547 | Marvin Hayes | Operator | 4.0 | $ 42.00 | $ 168.00 |
| 4 | 6719 | Quantral Cannon | Welder | 4.0 | $ 24.00 | $ 96.00 |
| 5 | TEMP | Andrew Wery | Welder | 4.0 | $ 23.00 | $ 92.00 |
| 6 | TEMP | Noah Love | Welder | 4.0 | $ 23.00 | $ 92.00 |
| 7 | | | | | | $ - |
| 8 | | | | | | $ - |
| 9 | | | | | | $ - |
| 10 | | | | | | $ - |
| 11 | | | | | | $ - |
| | | | | SUBTOTAL | | $ 776.00 |
| | | | | BURDEN (44.52%) | | $ 345.48 |
| | | | | JBCCI MU 15.0% | | $ 168.22 |
| | | | | LABOR TOTAL | | $ 1,289.70 |

## EQUIPMENT

| EQUIP. NO. | | TYPE OF EQUIPMENT | HOURS | RATE | AMOUNT |
|---|---|---|---|---|---|
| 1 | BHC189 | Excavator | 4.0 | $ 133.37 | $ 533.48 |
| 2 | TKP299 | F-150 Pickup Truck | 4.0 | $ 45.36 | $ 181.44 |
| 3 | WLP012 | Welding Machine | 4.0 | $ 11.43 | $ 45.72 |
| 4 | WLP013 | Welding Machine | 4.0 | $ 11.43 | $ 45.72 |
| 5 | | | | | $ - |
| 6 | | | | | $ - |
| 7 | | | | | $ - |
| 8 | | | | | $ - |
| 9 | | | | | $ - |
| | | | EQUIPMENT SUBTOTAL | | $ 806.36 |
| | | | JBCCI MU 15.0% | | $ 120.95 |
| | | | EQUIPMENT TOTAL | | $ 927.31 |

## MATERIALS

| | DESCRIPTION | QUANTITY | UNIT | PRICE | AMOUNT |
|---|---|---|---|---|---|
| 1 | | | | | $ - |
| | | | MATERIALS SUBTOTAL | | $ - |
| | | | Sales Tax (7.5%) | | $ - |
| | | | MATERIALS Mark Up (15.0%) | | $ - |
| | | | MATERIALS TOTAL | | $ - |

## SUBCONTRACTORS

| | DESCRIPTION | QUANTITY | UNIT | PRICE | AMOUNT |
|---|---|---|---|---|---|
| 1 | | | | | $ - |
| | | | SUBCONTRACTS SUBTOTAL | | $ - |
| | | | SUBCONTRACTS MU (10%) | | $ - |
| | | | SUBCONTRACTS TOTAL | | $ - |

DESCRIPTION OF WORK: Installation of 8" Beams and C-Channel in setion 1

| | | |
|---|---|---|
| SUBTOTAL | $ | 2,217.01 |
| 0.53% Bond | $ | 11.75 |
| **GRAND TOTAL** | **$** | **2,228.76** |

Report Submitted by: _____

Docusign Envelope ID: F54DB230-A150-452A-B3F0-14C4A48C193C

J. B. COXWELL CONTRACTING, INC.
6741 Lloyd Road West, Jacksonville, FL 32254-1249
Telephone (904) 786-1120 * Fax (904) 783-2970

**FORCE ACCOUNT**
**DAILY TIME REPORT**

NAME: Carl Padgett GAI Consultants
MAILING ADDRESS: 12574 Flagler Center Blvd Suite 202
CITY: Jacksonville Fl. 32258

Date: October 11, 2025
Our Job No.: 2325
Location: Mccoy's Creek Channel Improvements

Section 1 Welding Beams and C-Channels

Idle Equipment Rate Charged at 50% Blue Book Value

## LABOR

| EMP. NO. | | EMPLOYEE'S NAME | OCCUPATION | HOURS | RATE | AMOUNT |
|---|---|---|---|---|---|---|
| 1 | 6514 | Scott Brunette | Superintendent | 8.0 | $ 60.00 | $ 480.00 |
| 2 | 6613 | Christopher Griffin | Welder | 8.0 | $ 22.00 | $ 176.00 |
| 3 | 6547 | Marvin Hayes | Operator | 8.0 | $ 42.00 | $ 336.00 |
| 4 | 6719 | Quantral Cannon | Welder | 8.0 | $ 24.00 | $ 192.00 |
| 5 | TEMP | Andrew Wery | Welder | 8.0 | $ 23.00 | $ 184.00 |
| 6 | TEMP | Noah Love | Welder | 8.0 | $ 23.00 | $ 184.00 |
| 7 | | | | | | $ - |
| 8 | | | | | | $ - |
| 9 | | | | | | $ - |
| 10 | | | | | | $ - |
| 11 | | | | | | $ - |
| | | | | SUBTOTAL | | $ 1,552.00 |
| | | | | BURDEN (44.52%) | | $ 690.95 |
| | | | | JBCCI MU 15.0% | | $ 336.44 |
| | | | | LABOR TOTAL | | $ 2,579.39 |

## EQUIPMENT

| EQUIP. NO | | TYPE OF EQUIPMENT | HOURS | RATE | AMOUNT |
|---|---|---|---|---|---|
| 1 | BHC189 | Excavator | 8.0 | $ 133.37 | $ 1,066.96 |
| 2 | TKP299 | F-150 Pickup Truck | 8.0 | $ 45.36 | $ 362.88 |
| 3 | WLP012 | Welding Machine | 8.0 | $ 11.43 | $ 91.44 |
| 4 | WLP013 | Welding Machine | 8.0 | $ 11.43 | $ 91.44 |
| 5 | | | | | $ - |
| 6 | | | | | $ - |
| 7 | | | | | $ - |
| 8 | | | | | $ - |
| 9 | | | | | $ - |
| | | | EQUIPMENT SUBTOTAL | | $ 1,612.72 |
| | | | JBCCI MU 15.0% | | $ 241.91 |
| | | | EQUIPMENT TOTAL | | $ 1,854.63 |

## MATERIALS

| | DESCRIPTION | QUANTITY | UNIT | PRICE | AMOUNT |
|---|---|---|---|---|---|
| 1 | | | | | $ - |
| | | | MATERIALS SUBTOTAL | | $ - |
| | | | Sales Tax (7.5%) | | $ - |
| | | | MATERIALS Mark Up (15.0%) | | $ - |
| | | | MATERIALS TOTAL | | $ - |

## SUBCONTRACTORS

| | DESCRIPTION | QUANTITY | UNIT | PRICE | AMOUNT |
|---|---|---|---|---|---|
| 1 | | | | | $ - |
| | | | SUBCONTRACTS SUBTOTAL | | $ - |
| | | | SUBCONTRACTS MU (10%) | | $ - |
| | | | SUBCONTRACTS TOTAL | | $ - |

DESCRIPTION OF WORK: Installation of 8" Beams and C-Channel in setion 1

| | | |
|---|---|---|
| SUBTOTAL | $ | 4,434.02 |
| 0.53% Bond | $ | 23.50 |
| **GRAND TOTAL** | **$** | **4,457.52** |

Report Submitted by: _____

Docusign Envelope ID: F54DB230-A150-452A-B3F0-14C4A48C193C

J. B. COXWELL CONTRACTING, INC.
6741 Lloyd Road West, Jacksonville, FL 32254-1249
Telephone (904) 786-1120 * Fax (904) 783-2970

**FORCE ACCOUNT**
**DAILY TIME REPORT**

NAME: Carl Padgett GAI Consultants
MAILING ADDRESS: 12574 Flagler Center Blvd Suite 202
CITY: Jacksonville Fl 32258

Date: October 12, 2025
Our Job No.: 2325
Location: Mccoy's Creek Channel Improvements

Section 1 Welding Beams and C-Channels

Idle Equipment Rate Charged at 50% Blue Book Value

## LABOR

| EMP. NO. | | EMPLOYEE'S NAME | OCCUPATION | HOURS | RATE | AMOUNT |
|---|---|---|---|---|---|---|
| 1 | 6514 | Scott Brunette | Superintendent | 8.0 | $ 60.00 | $ 480.00 |
| 2 | 6813 | Christopher Griffin | Welder | 8.0 | $ 22.00 | $ 176.00 |
| 3 | 6547 | Marvin Hayes | Operator | 8.0 | $ 42.00 | $ 336.00 |
| 4 | 6719 | Quantral Cannon | Welder | 8.0 | $ 24.00 | $ 192.00 |
| 5 | TEMP | Andrew Wery | Welder | 8.0 | $ 23.00 | $ 184.00 |
| 6 | TEMP | Noah Love | Welder | 8.0 | $ 23.00 | $ 184.00 |
| 7 | | | | | | $ - |
| 8 | | | | | | $ - |
| 9 | | | | | | $ - |
| 10 | | | | | | $ - |
| 11 | | | | | | $ - |
| | | | | SUBTOTAL | | $ 1,552.00 |
| | | | | BURDEN (44.52%) | | $ 690.95 |
| | | | | JBCCI MU 15.0% | | $ 336.44 |
| | | | | LABOR TOTAL | | $ 2,579.39 |

## EQUIPMENT

| EQUIP. NO. | | TYPE OF EQUIPMENT | HOURS | RATE | AMOUNT |
|---|---|---|---|---|---|
| 1 | BHC189 | Excavator | 8.0 | $ 133.37 | $ 1,066.96 |
| 2 | TKP299 | F-150 Pickup Truck | 8.0 | $ 45.36 | $ 362.88 |
| 3 | WLP012 | Welding Machine | 8.0 | $ 11.43 | $ 91.44 |
| 4 | WLP013 | Welding Machine | 8.0 | $ 11.43 | $ 91.44 |
| 5 | | | | | $ - |
| 6 | | | | | $ - |
| 7 | | | | | $ - |
| 8 | | | | | $ - |
| 9 | | | | | $ - |
| | | | EQUIPMENT SUBTOTAL | | $ 1,612.72 |
| | | | JBCCI MU 15.0% | | $ 241.91 |
| | | | EQUIPMENT TOTAL | | $ 1,854.63 |

## MATERIALS

| | DESCRIPTION | QUANTITY | UNIT | PRICE | AMOUNT |
|---|---|---|---|---|---|
| 1 | | | | | $ - |
| | | | MATERIALS SUBTOTAL | | $ - |
| | | | Sales Tax (7.5%) | | $ - |
| | | | MATERIALS Mark Up (15.0%) | | $ - |
| | | | MATERIALS TOTAL | | $ - |

## SUBCONTRACTORS

| | DESCRIPTION | QUANTITY | UNIT | PRICE | AMOUNT |
|---|---|---|---|---|---|
| 1 | | | | | $ - |
| | | | SUBCONTRACTS SUBTOTAL | | $ - |
| | | | SUBCONTRACTS MU (10%) | | $ - |
| | | | SUBCONTRACTS TOTAL | | $ - |

DESCRIPTION OF WORK: Installation of 8" Beams and C-Channel in section 1

| | | |
|---|---|---|
| SUBTOTAL | $ | 4,434.02 |
| 0.53% Bond | $ | 23.50 |
| **GRAND TOTAL** | **$** | **4,457.52** |

Report Submitted by: _____

Docusign Envelope ID: F54DB230-A150-452A-B3F0-14C4A48C193C

J. B. COXWELL CONTRACTING, INC.
6741 Lloyd Road West, Jacksonville, FL 32254-1249
Telephone (904) 786-1120 * Fax (904) 783-2970

**FORCE ACCOUNT**
**DAILY TIME REPORT**

NAME: Carl Padgett GAI Consultants
MAILING ADDRESS: 12574 Flagler Center Blvd Suite 202
CITY: Jacksonville Fl. 32258

Date: October 14, 2025
Our Job No.: 2325
Location: Mccoy's Creek Channel Improvements

Section 1 Welding Beams and C-Channels

Idle Equipment Rate Charged at 50% Blue Book Value

## LABOR

| EMP. NO. | | EMPLOYEE'S NAME | OCCUPATION | HOURS | RATE | AMOUNT |
|---|---|---|---|---|---|---|
| 1 | 6514 | Scott Brunette | Superintendent | 10.0 | $ 60.00 | $ 600.00 |
| 2 | 6613 | Christopher Griffin | Welder | 10.0 | $ 22.00 | $ 220.00 |
| 3 | 6547 | Marvin Hayes | Operator | 10.0 | $ 42.00 | $ 420.00 |
| 4 | 6719 | Quantral Cannon | Welder | 10.0 | $ 24.00 | $ 240.00 |
| 5 | TEMP | Andrew Wery | Welder | 10.0 | $ 23.00 | $ 230.00 |
| 6 | TEMP | Noah Love | Welder | 10.0 | $ 23.00 | $ 230.00 |
| 7 | | | | | | $ - |
| 8 | | | | | | $ - |
| 9 | | | | | | $ - |
| 10 | | | | | | $ - |
| 11 | | | | | | $ - |
| | | | | SUBTOTAL | | $ 1,940.00 |
| | | | | BURDEN (44.52%) | | $ 863.69 |
| | | | | JBCCI MU 15.0% | | $ 420.55 |
| | | | | LABOR TOTAL | | $ 3,224.24 |

## EQUIPMENT

| EQUIP. NO. | | TYPE OF EQUIPMENT | HOURS | RATE | AMOUNT |
|---|---|---|---|---|---|
| 1 | SHC189 | Excavator | 10.0 | $ 133.37 | $ 1,333.70 |
| 2 | TKP289 | F-150 Pickup Truck | 10.0 | $ 45.36 | $ 453.60 |
| 3 | WLP012 | Welding Machine | 10.0 | $ 11.43 | $ 114.30 |
| 4 | WLP013 | Welding Machine | 10.0 | $ 11.43 | $ 114.30 |
| 5 | | | | | $ - |
| 6 | | | | | $ - |
| 7 | | | | | $ - |
| 8 | | | | | $ - |
| 9 | | | | | $ - |
| | | | EQUIPMENT SUBTOTAL | | $ 2,015.90 |
| | | | JBCCI MU 15.0% | | $ 302.39 |
| | | | EQUIPMENT TOTAL | | $ 2,318.29 |

## MATERIALS

| | DESCRIPTION | QUANTITY | UNIT | PRICE | AMOUNT |
|---|---|---|---|---|---|
| 1 | | | | | $ - |
| | | | MATERIALS SUBTOTAL | | $ - |
| | | | Sales Tax (7.5%) | | $ - |
| | | | MATERIALS Mark Up (15.0%) | | $ - |
| | | | MATERIALS TOTAL | | $ - |

## SUBCONTRACTORS

| | DESCRIPTION | QUANTITY | UNIT | PRICE | AMOUNT |
|---|---|---|---|---|---|
| 1 | | | | | $ - |
| | | | SUBCONTRACTS SUBTOTAL | | $ - |
| | | | SUBCONTRACTS MU (10%) | | $ - |
| | | | SUBCONTRACTS TOTAL | | $ - |

DESCRIPTION OF WORK: Installation of 8" Beams and C-Channel in setion 1

| | | |
|---|---|---|
| SUBTOTAL | $ | 5,542.53 |
| 0.53% Bond | $ | 29.38 |
| **GRAND TOTAL** | **$** | **5,571.90** |

Report Submitted by: _____

Docusign Envelope ID: F54DB230-A150-452A-B3F0-14C4A48C193C

J. B. COXWELL CONTRACTING, INC.
6741 Lloyd Road West, Jacksonville, FL 32254-1249
Telephone (904) 786-1120 * Fax (904) 783-2970

**FORCE ACCOUNT**
**DAILY TIME REPORT**

NAME: Carl Padgett GAI Consultants
MAILING ADDRESS: 12574 Flagler Center Blvd Suite 202
CITY: Jacksonville Fl, 32258

Date: October 15, 2025
Our Job No.: 2325
Location: Mccoy's Creek Channel Improvements

Section 1 Welding Beams and C-Channels

Idle Equipment Rate Charged at 50% Blue Book Value

## LABOR

| EMP. NO. | | EMPLOYEE'S NAME | OCCUPATION | HOURS | RATE | AMOUNT |
|---|---|---|---|---|---|---|
| 1 | 6514 | Scott Brunette | Superintendent | 10.0 | $ 60.00 | $ 600.00 |
| 2 | 6613 | Christopher Griffin | Welder | 10.0 | $ 22.00 | $ 220.00 |
| 3 | 6547 | Marvin Hayes | Operator | 10.0 | $ 42.00 | $ 420.00 |
| 4 | 6719 | Quantral Cannon | Welder | 10.0 | $ 24.00 | $ 240.00 |
| 5 | TEMP | Andrew Wary | Welder | 10.0 | $ 23.00 | $ 230.00 |
| 6 | TEMP | Noah Love | Welder | 10.0 | $ 23.00 | $ 230.00 |
| 7 | | | | | | $ - |
| 8 | | | | | | $ - |
| 9 | | | | | | $ - |
| 10 | | | | | | $ - |
| 11 | | | | | | $ - |
| | | | | SUBTOTAL | | $ 1,940.00 |
| | | | | BURDEN (44.52%) | | $ 863.59 |
| | | | | JBCCI MU 15.0% | | $ 420.55 |
| | | | | LABOR TOTAL | | $ 3,224.24 |

## EQUIPMENT

| EQUIP. NO. | | TYPE OF EQUIPMENT | HOURS | RATE | AMOUNT |
|---|---|---|---|---|---|
| 1 | BHC189 | Excavator | 10.0 | $ 133.37 | $ 1,333.70 |
| 2 | TKP299 | F-150 Pickup Truck | 10.0 | $ 45.36 | $ 453.60 |
| 3 | WLP012 | Welding Machine | 10.0 | $ 11.43 | $ 114.30 |
| 4 | WLP013 | Welding Machine | 10.0 | $ 11.43 | $ 114.30 |
| 5 | | | | | $ - |
| 6 | | | | | $ - |
| 7 | | | | | $ - |
| 8 | | | | | $ - |
| 9 | | | | | $ - |
| | | | EQUIPMENT SUBTOTAL | | $ 2,015.90 |
| | | | JBCCI MU 15.0% | | $ 302.39 |
| | | | EQUIPMENT TOTAL | | $ 2,318.29 |

## MATERIALS

| | DESCRIPTION | QUANTITY | UNIT | PRICE | AMOUNT |
|---|---|---|---|---|---|
| 1 | | | | | $ - |
| | | | MATERIALS SUBTOTAL | | $ - |
| | | | Sales Tax (7.5%) | | $ - |
| | | | MATERIALS Mark Up (15.0%) | | $ - |
| | | | MATERIALS TOTAL | | $ - |

## SUBCONTRACTORS

| | DESCRIPTION | QUANTITY | UNIT | PRICE | AMOUNT |
|---|---|---|---|---|---|
| 1 | | | | | $ - |
| | | | SUBCONTRACTS SUBTOTAL | | $ - |
| | | | SUBCONTRACTS MU (10%) | | $ - |
| | | | SUBCONTRACTS TOTAL | | $ - |

DESCRIPTION OF WORK: Installation of 8" Beams and C-Channel in setion 1

| | | |
|---|---|---|
| SUBTOTAL | $ | 5,542.53 |
| 0.53% Bond | $ | 29.38 |
| **GRAND TOTAL** | **$** | **5,571.90** |

Report Submitted by: _____

Docusign Envelope ID: F54DB230-A150-452A-B3F0-14C4A48C193C

J. B. COXWELL CONTRACTING, INC.
6741 Lloyd Road West, Jacksonville, FL 32254-1249
Telephone (904) 786-1120 * Fax (904) 783-2970

**FORCE ACCOUNT**
**DAILY TIME REPORT**

NAME: Carl Padgett GAI Consultants
MAILING ADDRESS: 12574 Flagler Center Blvd Suite 202
CITY: Jacksonville Fl. 32258

Date: October 18, 2025
Our Job No.: 2325
Location: Mccoy's Creek Channel Improvements

Section 1 Welding Beams and C-Channels

Idle Equipment Rate Charged at 50% Blue Book Value

## LABOR

| EMP. NO. | | EMPLOYEE'S NAME | OCCUPATION | HOURS | RATE | AMOUNT |
|---|---|---|---|---|---|---|
| 1 | 6514 | Scott Brunette | Superintendent | 8.0 | $ 60.00 | $ 480.00 |
| 2 | 6613 | Christopher Griffin | Welder | 8.0 | $ 22.00 | $ 176.00 |
| 3 | 6547 | Marvin Hayes | Operator | 8.0 | $ 42.00 | $ 336.00 |
| 4 | 6719 | Quantral Cannon | Welder | 8.0 | $ 24.00 | $ 192.00 |
| 5 | TEMP | Andrew Wery | Welder | 8.0 | $ 23.00 | $ 184.00 |
| 6 | TEMP | Noah Love | Welder | 8.0 | $ 23.00 | $ 184.00 |
| 7 | | | | | | $ - |
| 8 | | | | | | $ - |
| 9 | | | | | | $ - |
| 10 | | | | | | $ - |
| 11 | | | | | | $ - |
| | | | | SUBTOTAL | | $ 1,552.00 |
| | | | | BURDEN (44.52%) | | $ 690.95 |
| | | | | JBCCI MU 15.0% | | $ 336.44 |
| | | | | LABOR TOTAL | | $ 2,579.39 |

## EQUIPMENT

| EQUIP. NO. | | TYPE OF EQUIPMENT | HOURS | RATE | AMOUNT |
|---|---|---|---|---|---|
| 1 | BHC189 | Excavator | 8.0 | $ 133.37 | $ 1,066.96 |
| 2 | TKP299 | F-150 Pickup Truck | 8.0 | $ 45.36 | $ 362.88 |
| 3 | WLP012 | Welding Machine | 8.0 | $ 11.43 | $ 91.44 |
| 4 | WLP013 | Welding Machine | 8.0 | $ 11.43 | $ 91.44 |
| 5 | | | | | $ - |
| 6 | | | | | $ - |
| 7 | | | | | $ - |
| 8 | | | | | $ - |
| 9 | | | | | $ - |
| | | | EQUIPMENT SUBTOTAL | | $ 1,612.72 |
| | | | JBCCI MU 15.0% | | $ 241.91 |
| | | | EQUIPMENT TOTAL | | $ 1,854.63 |

## MATERIALS

| | DESCRIPTION | QUANTITY | UNIT | PRICE | AMOUNT |
|---|---|---|---|---|---|
| 1 | | | | | $ - |
| | | | MATERIALS SUBTOTAL | | $ - |
| | | | Sales Tax (7.5%) | | $ - |
| | | | MATERIALS Mark Up (15.0%) | | $ - |
| | | | MATERIALS TOTAL | | $ - |

## SUBCONTRACTORS

| | DESCRIPTION | QUANTITY | UNIT | PRICE | AMOUNT |
|---|---|---|---|---|---|
| 1 | | | | | $ - |
| | | | SUBCONTRACTS SUBTOTAL | | $ - |
| | | | SUBCONTRACTS MU (10%) | | $ - |
| | | | SUBCONTRACTS TOTAL | | $ - |

DESCRIPTION OF WORK: Installation of 8" Beams and C-Channel in setion 1

| | | |
|---|---|---|
| SUBTOTAL | $ | 4,434.02 |
| 0.53% Bond | $ | 23.50 |
| **GRAND TOTAL** | **$** | **4,457.52** |

Report Submitted by: _____

Docusign Envelope ID: F54DB230-A150-452A-B3F0-14C4A48C193C

J. B. COXWELL CONTRACTING, INC.
6741 Lloyd Road West, Jacksonville, FL 32254-1249
Telephone (904) 786-1120 * Fax (904) 783-2970

**FORCE ACCOUNT**
**DAILY TIME REPORT**

NAME: Carl Padgett GAI Consultants
MAILING ADDRESS: 12574 Flagler Center Blvd Suite 202
CITY: Jacksonville Fl 32258

Date: October 19, 2025
Our Job No.: 2325
Location: Mccoy's Creek Channel Improvements

Section 1 Welding Beams and C-Channels

Idle Equipment Rate Charged at 50% Blue Book Value

## LABOR

| EMP. NO. | | EMPLOYEE'S NAME | OCCUPATION | HOURS | RATE | AMOUNT |
|---|---|---|---|---|---|---|
| 1 | 6514 | Scott Brunette | Superintendent | 8.0 | $ 60.00 | $ 480.00 |
| 2 | 6613 | Christopher Griffin | Welder | 8.0 | $ 22.00 | $ 176.00 |
| 3 | 6547 | Marvin Hayes | Operator | 8.0 | $ 42.00 | $ 336.00 |
| 4 | 6719 | Quanirai Cannon | Welder | 8.0 | $ 24.00 | $ 192.00 |
| 5 | TEMP | Andrew Wery | Welder | 8.0 | $ 23.00 | $ 184.00 |
| 6 | TEMP | Noah Love | Welder | 8.0 | $ 23.00 | $ 184.00 |
| 7 | | | | | | $ - |
| 8 | | | | | | $ - |
| 9 | | | | | | $ - |
| 10 | | | | | | $ - |
| 11 | | | | | | $ - |
| | | | | SUBTOTAL | | $ 1,552.00 |
| | | | | BURDEN (44.52%) | | $ 690.95 |
| | | | | JBCCI MU 15.0% | | $ 336.44 |
| | | | | LABOR TOTAL | | $ 2,579.39 |

## EQUIPMENT

| EQUIP. NO. | | TYPE OF EQUIPMENT | HOURS | RATE | AMOUNT |
|---|---|---|---|---|---|
| 1 | BHC199 | Excavator | 8.0 | $ 133.37 | $ 1,066.96 |
| 2 | TKP299 | F-150 Pickup Truck | 8.0 | $ 45.36 | $ 362.88 |
| 3 | WLP012 | Welding Machine | 8.0 | $ 11.43 | $ 91.44 |
| 4 | WLP013 | Welding Machine | 8.0 | $ 11.43 | $ 91.44 |
| 5 | | | | | $ - |
| 6 | | | | | $ - |
| 7 | | | | | $ - |
| 8 | | | | | $ - |
| 9 | | | | | $ - |
| | | | EQUIPMENT SUBTOTAL | | $ 1,612.72 |
| | | | JBCCI MU 15.0% | | $ 241.91 |
| | | | EQUIPMENT TOTAL | | $ 1,854.63 |

## MATERIALS

| | DESCRIPTION | QUANTITY | UNIT | PRICE | AMOUNT |
|---|---|---|---|---|---|
| 1 | | | | | $ - |
| | | | MATERIALS SUBTOTAL | | $ - |
| | | | Sales Tax (7.5%) | | $ - |
| | | | MATERIALS Mark Up (15.0%) | | $ - |
| | | | MATERIALS TOTAL | | $ - |

## SUBCONTRACTORS

| | DESCRIPTION | QUANTITY | UNIT | PRICE | AMOUNT |
|---|---|---|---|---|---|
| 1 | | | | | $ - |
| | | | SUBCONTRACTS SUBTOTAL | | $ - |
| | | | SUBCONTRACTS MU (10%) | | $ - |
| | | | SUBCONTRACTS TOTAL | | $ - |

DESCRIPTION OF WORK: Installation of 8" Beams and C-Channel in setion 1

| | | |
|---|---|---|
| SUBTOTAL | $ | 4,434.02 |
| 0.53% Bond | $ | 23.50 |
| **GRAND TOTAL** | **$** | **4,457.52** |

Report Submitted by: _____

Docusign Envelope ID: F54DB230-A150-452A-B3F0-14C4A48C193C

J. B. COXWELL CONTRACTING, INC.
6741 Lloyd Road West, Jacksonville, FL 32254-1249
Telephone (904) 786-1120 * Fax (904) 783-2970

**FORCE ACCOUNT**
**DAILY TIME REPORT**

NAME: Carl Padgett GAI Consultants
MAILING ADDRESS: 12574 Flagler Center Blvd Suite 202
CITY: Jacksonville Fl. 32258

Date: October 21, 2025
Our Job No.: 2325
Location: Mccoy's Creek Channel Improvements

Section 1 Welding Beams and C-Channels

Idle Equipment Rate Charged at 50% Blue Book Value

## LABOR

| EMP. NO. | | EMPLOYEE'S NAME | OCCUPATION | HOURS | RATE | AMOUNT |
|---|---|---|---|---|---|---|
| 1 | 6514 | Scott Brunette | Superintendent | 10.0 | $ 60.00 | $ 600.00 |
| 2 | 6613 | Christopher Griffin | Welder | 10.0 | $ 22.00 | $ 220.00 |
| 3 | 6547 | Marvin Hayes | Operator | 10.0 | $ 42.00 | $ 420.00 |
| 4 | 6719 | Quantral Cannon | Welder | 10.0 | $ 24.00 | $ 240.00 |
| 5 | TEMP | Andraw Wary | Welder | 8.0 | $ 23.00 | $ 184.00 |
| 6 | TEMP | Noah Love | Welder | 10.0 | $ 23.00 | $ 230.00 |
| 7 | | | | | | $ - |
| 8 | | | | | | $ - |
| 9 | | | | | | $ - |
| 10 | | | | | | $ - |
| 11 | | | | | | $ - |
| | | | | SUBTOTAL | | $ 1,894.00 |
| | | | | BURDEN (44.52%) | | $ 843.21 |
| | | | | JBCCI MU 15.0% | | $ 410.58 |
| | | | | LABOR TOTAL | | $ 3,147.79 |

## EQUIPMENT

| EQUIP. NO. | | TYPE OF EQUIPMENT | HOURS | RATE | AMOUNT |
|---|---|---|---|---|---|
| 1 | BHC189 | Excavator | 10.0 | $ 133.37 | $ 1,333.70 |
| 2 | TKP299 | F-150 Pickup Truck | 10.0 | $ 45.36 | $ 453.60 |
| 3 | WLP012 | Welding Machine | 10.0 | $ 11.43 | $ 114.30 |
| 4 | WLP013 | Welding Machine | 10.0 | $ 11.43 | $ 114.30 |
| 5 | | | | | $ - |
| 6 | | | | | $ - |
| 7 | | | | | $ - |
| 8 | | | | | $ - |
| 9 | | | | | $ - |
| | | | EQUIPMENT SUBTOTAL | | $ 2,015.90 |
| | | | JBCCI MU 15.0% | | $ 302.39 |
| | | | EQUIPMENT TOTAL | | $ 2,318.29 |

## MATERIALS

| | DESCRIPTION | QUANTITY | UNIT | PRICE | AMOUNT |
|---|---|---|---|---|---|
| 1 | | | | | $ - |
| | | | MATERIALS SUBTOTAL | | $ - |
| | | | Sales Tax (7.5%) | | $ - |
| | | | MATERIALS Mark Up (15.0%) | | $ - |
| | | | MATERIALS TOTAL | | $ - |

## SUBCONTRACTORS

| | DESCRIPTION | QUANTITY | UNIT | PRICE | AMOUNT |
|---|---|---|---|---|---|
| 1 | | | | | $ - |
| | | | SUBCONTRACTS SUBTOTAL | | $ - |
| | | | SUBCONTRACTS MU (10%) | | $ - |
| | | | SUBCONTRACTS TOTAL | | $ - |

DESCRIPTION OF WORK: Installation of 8" Beams and C-Channel in sation 1

| | | |
|---|---|---|
| SUBTOTAL | $ | 5,466.08 |
| 0.53% Bond | $ | 28.97 |
| **GRAND TOTAL** | **$** | **5,495.05** |

Report Submitted by: _____

Docusign Envelope ID: F54DB230-A150-452A-B3F0-14C4A48C193C

J. B. COXWELL CONTRACTING, INC.
6741 Lloyd Road West, Jacksonville, FL 32254-1245
Telephone (904) 786-1120 * Fax (904) 783-2970

**FORCE ACCOUNT**
**DAILY TIME REPORT**

NAME: Carl Padgett GAI Consultants
MAILING ADDRESS: 12574 Flagler Center Blvd Suite 202
CITY: Jacksonville Fl 32258

Date: October 22, 2025
Our Job No.: 2325
Location: Mccoy's Creek Channel Improvements

Section 1 Welding Beams and C-Channels

Idle Equipment Rate Charged at 50% Blue Book Value

## LABOR

| EMP. NO. | | EMPLOYEE'S NAME | OCCUPATION | HOURS | RATE | AMOUNT |
|---|---|---|---|---|---|---|
| 1 | 6514 | Scott Brunette | Superintendent | 10.0 | $ 60.00 | $ 600.00 |
| 2 | 6613 | Christopher Griffin | Welder | 10.0 | $ 22.00 | $ 220.00 |
| 3 | 6547 | Malvin Hayes | Operator | 10.0 | $ 42.00 | $ 420.00 |
| 4 | 6719 | Quantral Cannon | Welder | 10.0 | $ 24.00 | $ 240.00 |
| 5 | TEMP | Andrew Wery | Welder | 10.0 | $ 23.00 | $ 230.00 |
| 6 | TEMP | Noah Love | Welder | 10.0 | $ 23.00 | $ 230.00 |
| 7 | | | | | | $ - |
| 8 | | | | | | $ - |
| 9 | | | | | | $ - |
| 10 | | | | | | $ - |
| 11 | | | | | | $ - |
| | | | | SUBTOTAL | | $ 1,940.00 |
| | | | | BURDEN (44.52%) | | $ 863.69 |
| | | | | JBCCI MU 15.0% | | $ 420.55 |
| | | | | LABOR TOTAL | | $ 3,224.24 |

## EQUIPMENT

| EQUIP. NO. | | TYPE OF EQUIPMENT | HOURS | RATE | AMOUNT |
|---|---|---|---|---|---|
| 1 | BHC189 | Excavator | 10.0 | $ 133.37 | $ 1,333.70 |
| 2 | TKP299 | F-150 Pickup Truck | 10.0 | $ 45.36 | $ 453.60 |
| 3 | WLP012 | Welding Machine | 10.0 | $ 11.43 | $ 114.30 |
| 4 | WLP013 | Welding Machine | 10.0 | $ 11.43 | $ 114.30 |
| 5 | | | | | $ - |
| 6 | | | | | $ - |
| 7 | | | | | $ - |
| 8 | | | | | $ - |
| 9 | | | | | $ - |
| | | | EQUIPMENT SUBTOTAL | | $ 2,015.90 |
| | | | JBCCI MU 15.0% | | $ 302.39 |
| | | | EQUIPMENT TOTAL | | $ 2,318.29 |

## MATERIALS

| | DESCRIPTION | QUANTITY | UNIT | PRICE | AMOUNT |
|---|---|---|---|---|---|
| 1 | | | | | $ - |
| | | | MATERIALS SUBTOTAL | | $ - |
| | | | Sales Tax (7.5%) | | $ - |
| | | | MATERIALS Mark Up (15.0%) | | $ - |
| | | | MATERIALS TOTAL | | $ - |

## SUBCONTRACTORS

| | DESCRIPTION | QUANTITY | UNIT | PRICE | AMOUNT |
|---|---|---|---|---|---|
| 1 | | | | | $ - |
| | | | SUBCONTRACTS SUBTOTAL | | $ - |
| | | | SUBCONTRACTS MU (10%) | | $ - |
| | | | SUBCONTRACTS TOTAL | | $ - |

DESCRIPTION OF WORK: Installation of 8" Beams and C-Channel in setion 1

| | | |
|---|---|---|
| SUBTOTAL | $ | 5,542.53 |
| 0.53% Bond | $ | 29.38 |
| **GRAND TOTAL** | **$** | **5,571.90** |

Report Submitted by: _____

Docusign Envelope ID: F54DB230-A150-452A-B3F0-14C4A48C193C

J. B. COXWELL CONTRACTING, INC.
6741 Lloyd Road West, Jacksonville, FL 32254-1249
Telephone (904) 786-1120 * Fax (904) 783-2970

**FORCE ACCOUNT**
**DAILY TIME REPORT**

NAME: Carl Padgett GAI Consultants
MAILING ADDRESS: 12574 Flagler Center Blvd Suite 202
CITY: Jacksonville Fl 32258

Date: October 23, 2025
Our Job No.: 2325
Location: Mccoy's Creek Channel Improvements

Section 1 Welding Beams and C-Channels

Idle Equipment Rate Charged at 50% Blue Book Value

## LABOR

| EMP. NO. | | EMPLOYEE'S NAME | OCCUPATION | HOURS | RATE | AMOUNT |
|---|---|---|---|---|---|---|
| 1 | 6514 | Scott Brunette | Superintendent | 10.0 | $ 60.00 | $ 600.00 |
| 2 | 6613 | Christopher Griffin | Welder | 10.0 | $ 22.00 | $ 220.00 |
| 3 | 6547 | Marvin Hayes | Operator | 10.0 | $ 42.00 | $ 420.00 |
| 4 | 6719 | Quantral Cannon | Welder | 10.0 | $ 24.00 | $ 240.00 |
| 5 | TEMP | Andrew Wary | Welder | 5.0 | $ 23.00 | $ 115.00 |
| 6 | TEMP | Noah Love | Welder | 10.0 | $ 23.00 | $ 230.00 |
| 7 | | | | | | $ - |
| 8 | | | | | | $ - |
| 9 | | | | | | $ - |
| 10 | | | | | | $ - |
| 11 | | | | | | $ - |
| | | | | SUBTOTAL | | $ 1,825.00 |
| | | | | BURDEN (44.52%) | | $ 812.49 |
| | | | | JBCCI MU 15.0% | | $ 395.52 |
| | | | | LABOR TOTAL | | $ 3,033.11 |

## EQUIPMENT

| EQUIP. NO. | | TYPE OF EQUIPMENT | HOURS | RATE | AMOUNT |
|---|---|---|---|---|---|
| 1 | BHC189 | Excavator | 10.0 | $ 133.37 | $ 1,333.70 |
| 2 | TKP299 | F-150 Pickup Truck | 10.0 | $ 45.36 | $ 453.60 |
| 3 | WLP012 | Welding Machine | 10.0 | $ 11.43 | $ 114.30 |
| 4 | WLP013 | Welding Machine | 10.0 | $ 11.43 | $ 114.30 |
| 5 | | | | | $ - |
| 6 | | | | | $ - |
| 7 | | | | | $ - |
| 8 | | | | | $ - |
| 9 | | | | | $ - |
| | | | EQUIPMENT SUBTOTAL | | $ 2,015.90 |
| | | | JBCCI MU 15.0% | | $ 302.39 |
| | | | EQUIPMENT TOTAL | | $ 2,318.29 |

## MATERIALS

| | DESCRIPTION | QUANTITY | UNIT | PRICE | AMOUNT |
|---|---|---|---|---|---|
| 1 | | | | | $ - |
| | | | MATERIALS SUBTOTAL | | $ - |
| | | | Sales Tax (7.5%) | | $ - |
| | | | MATERIALS Mark Up (15.0%) | | $ - |
| | | | MATERIALS TOTAL | | $ - |

## SUBCONTRACTORS

| | DESCRIPTION | QUANTITY | UNIT | PRICE | AMOUNT |
|---|---|---|---|---|---|
| 1 | | | | | $ - |
| | | | SUBCONTRACTS SUBTOTAL | | $ - |
| | | | SUBCONTRACTS MU (10%) | | $ - |
| | | | SUBCONTRACTS TOTAL | | $ - |

DESCRIPTION OF WORK: Installation of 8" Beams and C-Channel in setion 1

| | | |
|---|---|---|
| SUBTOTAL | $ | 5,351.40 |
| 0.53% Bond | $ | 28.36 |
| **GRAND TOTAL** | **$** | **5,379.76** |

Report Submitted by: _____

Docusign Envelope ID: F54DB230-A150-452A-B3F0-14C4A48C193C

J. B. COXWELL CONTRACTING, INC.
6741 Lloyd Road West, Jacksonville, FL 32254-1249
Telephone (904) 786-1120 * Fax (904) 783-2970

**FORCE ACCOUNT**
**DAILY TIME REPORT**

NAME: Carl Padgett GAI Consultants
MAILING ADDRESS: 12574 Flagler Center Blvd Suite 202
CITY: Jacksonville Fl. 32258

Date: October 24, 2025
Our Job No.: 2325
Location: Mccoy's Creek Channel Improvements

Section 1 Welding Beams and C-Channels

Idle Equipment Rate Charged at 50% Blue Book Value

## LABOR

| EMP. NO. | | EMPLOYEE'S NAME | OCCUPATION | HOURS | RATE | AMOUNT |
|---|---|---|---|---|---|---|
| 1 | 6514 | Scott Brunette | Superintendent | 10.0 | $ 60.00 | $ 600.00 |
| 2 | 6613 | Christopher Griffin | Welder | 10.0 | $ 22.00 | $ 220.00 |
| 3 | 6547 | Marvin Hayes | Operator | 10.0 | $ 42.00 | $ 420.00 |
| 4 | 6719 | Quantral Cannon | Welder | 10.0 | $ 24.00 | $ 240.00 |
| 5 | TEMP | Andrew Wery | Welder | 0.0 | | $ - |
| 6 | TEMP | Noah Love | Welder | 10.0 | $ 23.00 | $ 230.00 |
| 7 | | | | | | $ - |
| 8 | | | | | | $ - |
| 9 | | | | | | $ - |
| 10 | | | | | | $ |
| 11 | | | | | | $ - |
| | | | | SUBTOTAL | | $ 1,710.00 |
| | | | | BURDEN (44.52%) | | $ 761.29 |
| | | | | JBCCI MU 15.0% | | $ 370.69 |
| | | | | LABOR TOTAL | | $ 2,841.99 |

## EQUIPMENT

| EQUIP. NO. | | TYPE OF EQUIPMENT | HOURS | RATE | AMOUNT |
|---|---|---|---|---|---|
| 1 | BHC169 | Excavator | 10.0 | $ 133.37 | $ 1,333.70 |
| 2 | TKP299 | F-150 Pickup Truck | 10.0 | $ 45.36 | $ 453.60 |
| 3 | WLP012 | Welding Machine | 10.0 | $ 11.43 | $ 114.30 |
| 4 | WLP013 | Welding Machine | 10.0 | $ 11.43 | $ 114.30 |
| 5 | | | | | $ - |
| 6 | | | | | $ - |
| 7 | | | | | $ - |
| 8 | | | | | $ - |
| 9 | | | | | $ - |
| | | | EQUIPMENT SUBTOTAL | | $ 2,015.90 |
| | | | JBCCI MU 15.0% | | $ 302.39 |
| | | | EQUIPMENT TOTAL | | $ 2,318.29 |

## MATERIALS

| | DESCRIPTION | QUANTITY | UNIT | PRICE | AMOUNT |
|---|---|---|---|---|---|
| 1 | | | | | $ - |
| | | | MATERIALS SUBTOTAL | | $ - |
| | | | Sales Tax (7.5%) | | $ - |
| | | | MATERIALS Mark Up (15.0%) | | $ - |
| | | | MATERIALS TOTAL | | $ - |

## SUBCONTRACTORS

| | DESCRIPTION | QUANTITY | UNIT | PRICE | AMOUNT |
|---|---|---|---|---|---|
| 1 | | | | | $ - |
| | | | SUBCONTRACTS SUBTOTAL | | $ - |
| | | | SUBCONTRACTS MU (10%) | | $ - |
| | | | SUBCONTRACTS TOTAL | | $ - |

DESCRIPTION OF WORK: Installation of 8" Beams and C-Channel in setion 1

| | | |
|---|---|---|
| SUBTOTAL | $ | 5,160.27 |
| 0.53% Bond | $ | 27.35 |
| **GRAND TOTAL** | **$** | **5,187.62** |

Report Submitted by: _____

Docusign Envelope ID: F54DB230-A150-452A-B3F0-14C4A48C193C

J. B. COXWELL CONTRACTING, INC.
6741 Lloyd Road West, Jacksonville, FL 32254-1249
Telephone (904) 786-1120 * Fax (904) 783-2970

**FORCE ACCOUNT**
**DAILY TIME REPORT**

NAME: Carl Padgett GAI Consultants
MAILING ADDRESS: 12574 Flagler Center Blvd Suite 202
CITY: Jacksonville Fl 32258

Date: October 25, 2025
Our Job No.: 2325
Location: Mccoy's Creek Channel Improvements

Section 1 Welding Beams and C-Channels

Idle Equipment Rate Charged at 50% Blue Book Value

## LABOR

| EMP. NO. | | EMPLOYEE'S NAME | OCCUPATION | HOURS | RATE | AMOUNT |
|---|---|---|---|---|---|---|
| 1 | 6514 | Scott Brunette | Superintendent | 8.0 | $ 60.00 | $ 480.00 |
| 2 | 6613 | Christopher Griffin | Welder | 8.0 | $ 22.00 | $ 176.00 |
| 3 | 6547 | Marvin Hayes | Operator | 8.0 | $ 42.00 | $ 336.00 |
| 4 | 6719 | Quentral Cannon | Welder | 8.0 | $ 24.00 | $ 192.00 |
| 5 | TEMP | Andraw Wery | Welder | 0.0 | | $ - |
| 6 | TEMP | Noah Love | Welder | 8.0 | $ 23.00 | $ 184.00 |
| 7 | | | | | | $ - |
| 8 | | | | | | $ - |
| 9 | | | | | | $ - |
| 10 | | | | | | $ - |
| 11 | | | | | | $ - |
| | | | | SUBTOTAL | | $ 1,368.00 |
| | | | | BURDEN (44.52%) | | $ 609.03 |
| | | | | JBCCI MU 15.0% | | $ 296.56 |
| | | | | LABOR TOTAL | | $ 2,273.59 |

## EQUIPMENT

| EQUIP. NO. | | TYPE OF EQUIPMENT | HOURS | RATE | AMOUNT |
|---|---|---|---|---|---|
| 1 | 8HC189 | Excavator | 8.0 | $ 133.37 | $ 1,066.96 |
| 2 | TKP299 | F-150 Pickup Truck | 8.0 | $ 45.36 | $ 362.88 |
| 3 | WLP012 | Welding Machine | 8.0 | $ 11.43 | $ 91.44 |
| 4 | WLP013 | Welding Machine | 8.0 | $ 11.43 | $ 91.44 |
| 5 | | | | | $ - |
| 6 | | | | | $ - |
| 7 | | | | | $ - |
| 8 | | | | | $ - |
| 9 | | | | | $ - |
| | | | EQUIPMENT SUBTOTAL | | $ 1,612.72 |
| | | | JBCCI MU 15.0% | | $ 241.91 |
| | | | EQUIPMENT TOTAL | | $ 1,854.63 |

## MATERIALS

| | DESCRIPTION | QUANTITY | UNIT | PRICE | AMOUNT |
|---|---|---|---|---|---|
| 1 | | | | | $ - |
| | | | MATERIALS SUBTOTAL | | $ - |
| | | | Sales Tax (7.5%) | | $ - |
| | | | MATERIALS Mark Up (15.0%) | | $ - |
| | | | MATERIALS TOTAL | | $ - |

## SUBCONTRACTORS

| | DESCRIPTION | QUANTITY | UNIT | PRICE | AMOUNT |
|---|---|---|---|---|---|
| 1 | | | | | $ - |
| | | | SUBCONTRACTS SUBTOTAL | | $ - |
| | | | SUBCONTRACTS MU (10%) | | $ - |
| | | | SUBCONTRACTS TOTAL | | $ - |

DESCRIPTION OF WORK: Installation of 8" Beams and C-Channel in setion 1

| | | |
|---|---|---|
| SUBTOTAL | $ | 4,128.22 |
| 0.53% Bond | $ | 21.88 |
| **GRAND TOTAL** | **$** | **4,150.10** |

Report Submitted by: _____

Docusign Envelope ID: F54DB230-A150-452A-B3F0-14C4A48C193C

J. B. COXWELL CONTRACTING, INC.
6741 Lloyd Road West, Jacksonville, FL 32254-1249
Telephone (904) 786-1120 * Fax (904) 783-2970

**FORCE ACCOUNT**
**DAILY TIME REPORT**

NAME: Carl Padgett GAI Consultants
MAILING ADDRESS: 12574 Flagler Center Blvd Suite 202
CITY: Jacksonville Fl 32258

Date: October 26, 2025
Our Job No.: 2325
Location: Mccoy's Creek Channel Improvements

**Section 1 Welding Beams and C-Channels**

Idle Equipment Rate Charged at 50% Blue Book Value

## LABOR

| EMP. NO. | | EMPLOYEE'S NAME | OCCUPATION | HOURS | RATE | AMOUNT |
|---|---|---|---|---|---|---|
| 1 | 6514 | Scott Brunette | Superintendent | 8.0 | $ 60.00 | $ 480.00 |
| 2 | 6613 | Christopher Griffin | Welder | 8.0 | $ 22.00 | $ 176.00 |
| 3 | 6547 | Marvin Hayes | Operator | 8.0 | $ 42.00 | $ 336.00 |
| 4 | 6719 | Quentral Cannon | Welder | 8.0 | $ 24.00 | $ 192.00 |
| 5 | | | | | | $ - |
| 6 | | | | | | $ - |
| 7 | | | | | | $ - |
| 8 | | | | | | $ - |
| 9 | | | | | | $ - |
| 10 | | | | | | $ - |
| 11 | | | | | | $ - |
| | | | | SUBTOTAL | | $ 1,184.00 |
| | | | | BURDEN (44.52%) | | $ 527.12 |
| | | | | JBCCI MU 15.0% | | $ 256.67 |
| | | | | LABOR TOTAL | | $ 1,967.78 |

## EQUIPMENT

| EQUIP. NO. | | TYPE OF EQUIPMENT | HOURS | RATE | AMOUNT |
|---|---|---|---|---|---|
| 1 | BHC189 | Excavator | 8.0 | $ 133.37 | $ 1,066.96 |
| 2 | TKP299 | F-150 Pickup Truck | 8.0 | $ 45.36 | $ 362.88 |
| 3 | WLP012 | Welding Machine | 8.0 | $ 11.43 | $ 91.44 |
| 4 | WLP013 | Welding Machine | 8.0 | $ 11.43 | $ 91.44 |
| 5 | | | | | $ - |
| 6 | | | | | $ - |
| 7 | | | | | $ - |
| 8 | | | | | $ - |
| 9 | | | | | $ - |
| | | | | EQUIPMENT SUBTOTAL | $ 1,612.72 |
| | | | | JBCCI MU 15.0% | $ 241.91 |
| | | | | EQUIPMENT TOTAL | $ 1,854.63 |

## MATERIALS

| | DESCRIPTION | QUANTITY | UNIT | PRICE | AMOUNT |
|---|---|---|---|---|---|
| 1 | | | | | $ - |
| | | | | MATERIALS SUBTOTAL | $ - |
| | | | | Sales Tax (7.5%) | $ - |
| | | | | MATERIALS Mark Up (15.0%) | $ - |
| | | | | MATERIALS TOTAL | $ - |

## SUBCONTRACTORS

| | DESCRIPTION | QUANTITY | UNIT | PRICE | AMOUNT |
|---|---|---|---|---|---|
| 1 | | | | | $ - |
| | | | | SUBCONTRACTS SUBTOTAL | $ - |
| | | | | SUBCONTRACTS MU (10%) | $ - |
| | | | | SUBCONTRACTS TOTAL | $ - |

DESCRIPTION OF WORK: Installation of 8" Beams and C-Channel in setion 1

| | | |
|---|---|---|
| SUBTOTAL | $ | 3,822.41 |
| 0.53% Bond | $ | 20.26 |
| **GRAND TOTAL** | **$** | **3,842.67** |

Report Submitted by:

Docusign Envelope ID: F54DB230-A150-452A-B3F0-14C4A48C193C

J. B. COXWELL CONTRACTING, INC.
6741 Lloyd Road West, Jacksonville, FL 32254-1249
Telephone (904) 786-1120 * Fax (904) 783-2970

**FORCE ACCOUNT**
**DAILY TIME REPORT**

NAME: Carl Padgett GAI Consultants
MAILING ADDRESS: 12574 Flagler Center Blvd Suite 202
CITY: Jacksonville Fl. 32258

Date: March 20, 2025
Our Job No.: 2325
Location: Mccoy's Creek Channel Improvements

Section 1 Welding Beams and C-Channels

Idle Equipment Rate Charged at 50% Blue Book Value

## LABOR

| EMP. NO. | | EMPLOYEE'S NAME | OCCUPATION | HOURS | RATE | AMOUNT |
|---|---|---|---|---|---|---|
| 1 | 6514 | Scott Brunette | Superintendent | 10.0 | $ 60.00 | $ 600.00 |
| 2 | 6613 | Christopher Griffin | Welder | 10.0 | $ 22.00 | $ 220.00 |
| 3 | 6547 | Marvin Hayes | Operator | 10.0 | $ 42.00 | $ 420.00 |
| 4 | 6823 | Obed Gonzzales | Lead man | 10.0 | $ 26.00 | $ 260.00 |
| 5 | 6822 | Luis Vera | Welder | 10.0 | $ 23.00 | $ 230.00 |
| 6 | 6515 | Caleb Johns | Pile driver | 10.0 | $ 22.00 | $ 220.00 |
| 7 | | | | | | $ - |
| 8 | | | | | | $ - |
| 9 | | | | | | $ - |
| 10 | | | | | | $ - |
| 11 | | | | | | $ - |
| | | | | SUBTOTAL | | $ 1,950.00 |
| | | | | BURDEN (44.52%) | | $ 868.14 |
| | | | | JBCCI MU 15.0% | | $ 422.72 |
| | | | | LABOR TOTAL | | $ 3,240.86 |

## EQUIPMENT

| EQUIP. NO. | | TYPE OF EQUIPMENT | HOURS | RATE | AMOUNT |
|---|---|---|---|---|---|
| 1 | BHC188 | Excavator | 10.0 | $ 133.37 | $ 1,333.70 |
| 2 | TKP298 | F-150 Pickup Truck | 10.0 | $ 45.36 | $ 453.60 |
| 3 | WLP013 | Welding Machine | 10.0 | $ 11.43 | $ 114.30 |
| 4 | WLP016 | Welding Machine | 10.0 | $ 11.43 | $ 114.30 |
| 5 | WLP017 | Welding Machine | 10.0 | $ 11.43 | $ 114.30 |
| 6 | | | | | $ - |
| 7 | | | | | $ - |
| 8 | | | | | $ - |
| 9 | | | | | $ - |
| | | | EQUIPMENT SUBTOTAL | | $ 2,130.20 |
| | | | JBCCI MU 15.0% | | $ 319.53 |
| | | | EQUIPMENT TOTAL | | $ 2,449.73 |

## MATERIALS

| | DESCRIPTION | QUANTITY | UNIT | PRICE | AMOUNT |
|---|---|---|---|---|---|
| 1 | | | | | $ - |
| | | | MATERIALS SUBTOTAL | | $ - |
| | | | Sales Tax (7.5%) | | $ - |
| | | | MATERIALS Mark Up (15.0%) | | $ - |
| | | | MATERIALS TOTAL | | $ - |

## SUBCONTRACTORS

| DESCRIPTION | QUANTITY | UNIT | PRICE | AMOUNT |
|---|---|---|---|---|
| 1 | | | | $ - |
| | | SUBCONTRACTS SUBTOTAL | | $ - |
| | | SUBCONTRACTS MU (10%) | | $ - |
| | | SUBCONTRACTS TOTAL | | $ - |

DESCRIPTION OF WORK: Installation of 8" Beams and C-Channel in section 1

| | | |
|---|---|---|
| SUBTOTAL | $ | 5,690.59 |
| 0.53% Bond | $ | 30.16 |
| **GRAND TOTAL** | **$** | **5,720.75** |

Report Submitted by: _____

Docusign Envelope ID: F54DB230-A150-452A-B3F0-14C4A48C193C

J. B. COXWELL CONTRACTING, INC.
6741 Lloyd Road West, Jacksonville, FL 32254-1249
Telephone (904) 786-1120 * Fax (904) 783-2970

**FORCE ACCOUNT**
**DAILY TIME REPORT**

NAME: Carl Padgett GAI Consultants
MAILING ADDRESS: 12574 Flagler Center Blvd Suite 202
CITY: Jacksonville Fl. 32258

Date: March 21, 2025
Our Job No.: 2325
Location: Mccoy's Creek Channel Improvements

Section 1 Welding Beams and C-Channels

Idle Equipment Rate Charged at 50% Blue Book Value

## LABOR

| EMP. NO. | | EMPLOYEE'S NAME | OCCUPATION | HOURS | RATE | AMOUNT |
|---|---|---|---|---|---|---|
| 1 | 6514 | Scott Brunette | Superintendent | 8.0 | $ 60.00 | $ 480.00 |
| 2 | 6613 | Christopher Griffin | Welder | 8.0 | $ 22.00 | $ 176.00 |
| 3 | 6547 | Marvin Hayes | Operator | 8.0 | $ 42.00 | $ 336.00 |
| 4 | 6823 | Obed Gonzzales | Lead man | 8.0 | $ 26.00 | $ 208.00 |
| 5 | 6822 | Luis Vera | Welder | 8.0 | $ 23.00 | $ 184.00 |
| 6 | 6515 | Caleb Johns | Pile driver | 8.0 | $ 22.00 | $ 176.00 |
| 7 | | | | | | $ - |
| 8 | | | | | | $ - |
| 9 | | | | | | $ - |
| 10 | | | | | | $ - |
| 11 | | | | | | $ - |
| | | | | SUBTOTAL | | $ 1,560.00 |
| | | | | BURDEN (44.52%) | | $ 694.51 |
| | | | | JBCCI MU 15.0% | | $ 338.18 |
| | | | | LABOR TOTAL | | $ 2,592.69 |

## EQUIPMENT

| EQUIP. NO. | | TYPE OF EQUIPMENT | HOURS | RATE | AMOUNT |
|---|---|---|---|---|---|
| 1 | BHC189 | Excavator | 8.0 | $ 133.37 | $ 1,066.96 |
| 2 | TKP299 | F-150 Pickup Truck | 8.0 | $ 45.36 | $ 362.88 |
| 3 | WLP013 | Welding Machine | 8.0 | $ 11.43 | $ 91.44 |
| 4 | WLP016 | Welding Machine | 8.0 | $ 11.43 | $ 91.44 |
| 5 | WLP017 | Welding Machine | 8.0 | $ 11.43 | $ 91.44 |
| 6 | | | | | $ - |
| 7 | | | | | $ - |
| 8 | | | | | $ - |
| 9 | | | | | $ - |
| | | | EQUIPMENT SUBTOTAL | | $ 1,704.16 |
| | | | JBCCI MU 15.0% | | $ 255.62 |
| | | | EQUIPMENT TOTAL | | $ 1,959.78 |

## MATERIALS

| | DESCRIPTION | QUANTITY | UNIT | PRICE | AMOUNT |
|---|---|---|---|---|---|
| 1 | | | | | $ - |
| | | | MATERIALS SUBTOTAL | | $ - |
| | | | Sales Tax (7.5%) | | $ - |
| | | | MATERIALS Mark Up (15.0%) | | $ - |
| | | | MATERIALS TOTAL | | $ - |

## SUBCONTRACTORS

| | DESCRIPTION | QUANTITY | UNIT | PRICE | AMOUNT |
|---|---|---|---|---|---|
| 1 | | | | | $ - |
| | | | SUBCONTRACTS SUBTOTAL | | $ - |
| | | | SUBCONTRACTS MU (10%) | | $ - |
| | | | SUBCONTRACTS TOTAL | | $ - |

DESCRIPTION OF WORK: Installation of 8" Beams and C-Channel in setion 1

| | | |
|---|---|---|
| SUBTOTAL | $ | 4,552.47 |
| 0.53% Bond | $ | 24.13 |
| GRAND TOTAL | $ | 4,576.60 |

Report Submitted by: _____

Docusign Envelope ID: F54DB230-A150-452A-B3F0-14C4A48C193C

J. B. COXWELL CONTRACTING, INC.
6741 Lloyd Road West, Jacksonville, FL 32254-1249
Telephone (904) 786-1120 * Fax (904) 783-2970

# FORCE ACCOUNT
## DAILY TIME REPORT

NAME: Carl Padgett GAI Consultants
MAILING ADDRESS: 12574 Flagler Center Blvd Suite 202
CITY: Jacksonville Fl 32258

Date: March 24, 2025
Our Job No.: 2325
Location: Mccoy's Creek Channel Improvements

Section 1 Welding Beams and C-Channels

Idle Equipment Rate Charged at 50% Blue Book Value

## LABOR

| EMP. NO. | | EMPLOYEE'S NAME | OCCUPATION | HOURS | RATE | AMOUNT |
|---|---|---|---|---|---|---|
| 1 | 6514 | Scott Brunette | Superintendent | 10.0 | $ 60.00 | $ 600.00 |
| 2 | 6613 | Christopher Griffin | Welder | 10.0 | $ 22.00 | $ 220.00 |
| 3 | 6547 | Marvin Hayes | Operator | 10.0 | $ 42.00 | $ 420.00 |
| 4 | 6823 | Obed Gonzzales | Laad man | 10.0 | $ 26.00 | $ 260.00 |
| 5 | 6822 | Luis Vera | Welder | 10.0 | $ 23.00 | $ 230.00 |
| 6 | 6515 | Calab Johns | Pile driver | 10.0 | $ 22.00 | $ 220.00 |
| 7 | | | | | | $ - |
| 8 | | | | | | $ - |
| 9 | | | | | | $ - |
| 10 | | | | | | $ - |
| 11 | | | | | | $ - |
| | | | | SUBTOTAL | | $ 1,950.00 |
| | | | | BURDEN (44.52%) | | $ 868.14 |
| | | | | JBCCI MU 15.0% | | $ 422.72 |
| | | | | LABOR TOTAL | | $ 3,240.86 |

## EQUIPMENT

| EQUIP. NO. | | TYPE OF EQUIPMENT | HOURS | RATE | AMOUNT |
|---|---|---|---|---|---|
| 1 | BHC189 | Excavator | 10.0 | $ 133.37 | $ 1,333.70 |
| 2 | TKP299 | F-150 Pickup Truck | 10.0 | $ 45.36 | $ 453.60 |
| 3 | WLP013 | Welding Machine | 10.0 | $ 11.43 | $ 114.30 |
| 4 | WLP016 | Welding Machine | 10.0 | $ 11.43 | $ 114.30 |
| 5 | WLP017 | Welding Machine | 10.0 | $ 11.43 | $ 114.30 |
| 6 | | | | | $ - |
| 7 | | | | | $ - |
| 8 | | | | | $ - |
| 9 | | | | | $ - |
| | | | EQUIPMENT SUBTOTAL | | $ 2,130.20 |
| | | | JBCCI MU 15.0% | | $ 319.53 |
| | | | EQUIPMENT TOTAL | | $ 2,449.73 |

## MATERIALS

| | DESCRIPTION | QUANTITY | UNIT | PRICE | AMOUNT |
|---|---|---|---|---|---|
| 1 | | | | | $ - |
| | | | MATERIALS SUBTOTAL | | $ - |
| | | | Sales Tax (7.5%) | | $ - |
| | | | MATERIALS Mark Up (15.0%) | | $ - |
| | | | MATERIALS TOTAL | | $ - |

## SUBCONTRACTORS

| | DESCRIPTION | QUANTITY | UNIT | PRICE | AMOUNT |
|---|---|---|---|---|---|
| 1 | | | | | $ - |
| | | | SUBCONTRACTS SUBTOTAL | | $ - |
| | | | SUBCONTRACTS MU (10%) | | $ - |
| | | | SUBCONTRACTS TOTAL | | $ - |

DESCRIPTION OF WORK: Installation of 8" Beams and C-Channel in setion 1

| | | |
|---|---|---|
| SUBTOTAL | $ | 5,690.59 |
| 0.53% Bond | $ | 30.16 |
| **GRAND TOTAL** | **$** | **5,720.75** |

Report Submitted by: _____

J. B. COXWELL CONTRACTING, INC.
6741 Lloyd Road West, Jacksonville, FL 32254-1249
Telephone (904) 786-1120 * Fax (904) 783-2970

**FORCE ACCOUNT**
**DAILY TIME REPORT**

NAME: Carl Padgett GAI Consultants
Date: March 25, 2025

MAILING ADDRESS: 12574 Flagler Center Blvd Suite 202
Our Job No.: 2325

CITY: Jacksonville Fl 32258
Location: Mccoy's Creek Channel Improvements

Section 1 Welding Beams and C-Channels

Idle Equipment Rate Charged at 50% Blue Book Value

## LABOR

| EMP. NO. | | EMPLOYEE'S NAME | OCCUPATION | HOURS | RATE | AMOUNT |
|---|---|---|---|---|---|---|
| 1 | 6514 | Scott Brunette | Superintendent | 10.0 | $ 60.00 | $ 600.00 |
| 2 | 6613 | Christopher Griffin | Welder | 10.0 | $ 22.00 | $ 220.00 |
| 3 | 6547 | Marvin Hayes | Operator | 10.0 | $ 42.00 | $ 420.00 |
| 4 | 6823 | Obed Gonzzales | Lead man | 10.0 | $ 26.00 | $ 260.00 |
| 5 | 6922 | Luis Vera | Welder | 10.0 | $ 23.00 | $ 230.00 |
| 6 | 6515 | Caleb Johns | Pile driver | 10.0 | $ 22.00 | $ 220.00 |
| 7 | | | | | | $ - |
| 8 | | | | | | $ - |
| 9 | | | | | | $ - |
| 10 | | | | | | $ - |
| 11 | | | | | | $ - |
| | | | | SUBTOTAL | | $ 1,950.00 |
| | | | | BURDEN (44.52%) | | $ 868.14 |
| | | | | JBCCI MU 15.0% | | $ 422.72 |
| | | | | LABOR TOTAL | | $ 3,240.86 |

## EQUIPMENT

| EQUIP. NO. | | TYPE OF EQUIPMENT | HOURS | RATE | AMOUNT |
|---|---|---|---|---|---|
| 1 | BHC189 | Excavator | 10.0 | $ 133.37 | $ 1,333.70 |
| 2 | TKP299 | F-150 Pickup Truck | 10.0 | $ 45.36 | $ 453.60 |
| 3 | WLP013 | Welding Machine | 10.0 | $ 11.43 | $ 114.30 |
| 4 | WLP016 | Welding Machine | 10.0 | $ 11.43 | $ 114.30 |
| 5 | WLP017 | Welding Machine | 10.0 | $ 11.43 | $ 114.30 |
| 6 | | | | | $ - |
| 7 | | | | | $ - |
| 8 | | | | | $ - |
| 9 | | | | | $ - |
| | | | EQUIPMENT SUBTOTAL | | $ 2,130.20 |
| | | | JBCCI MU 15.0% | | $ 319.53 |
| | | | EQUIPMENT TOTAL | | $ 2,449.73 |

## MATERIALS

| | DESCRIPTION | QUANTITY | UNIT | PRICE | AMOUNT |
|---|---|---|---|---|---|
| 1 | | | | | $ - |
| | | | MATERIALS SUBTOTAL | | $ - |
| | | | Sales Tax (7.5%) | | $ - |
| | | | MATERIALS Mark Up (15.0%) | | $ - |
| | | | MATERIALS TOTAL | | $ - |

## SUBCONTRACTORS

| | DESCRIPTION | QUANTITY | UNIT | PRICE | AMOUNT |
|---|---|---|---|---|---|
| 1 | | | | | $ - |
| | | | SUBCONTRACTS SUBTOTAL | | $ - |
| | | | SUBCONTRACTS MU (10%) | | $ - |
| | | | SUBCONTRACTS TOTAL | | $ - |

DESCRIPTION OF WORK: Installation of 8" Beams and C-Channel in setion 1

| | | |
|---|---|---|
| SUBTOTAL | $ | 5,690.59 |
| 0.53% Bond | $ | 30.16 |
| **GRAND TOTAL** | **$** | **5,720.75** |

Report Submitted by: _____

Docusign Envelope ID: F54DB230-A150-452A-B3F0-14C4A48C193C

J. B. COXWELL CONTRACTING, INC.
8741 Lloyd Road West, Jacksonville, FL 32254-1249
Telephone (904) 786-1120 * Fax (904) 783-2970

**FORCE ACCOUNT**
**DAILY TIME REPORT**

NAME: Carl Padgett GAI Consultants
MAILING ADDRESS: 12574 Flagler Center Blvd Suite 202
CITY: Jacksonville Fl 32258

Date: March 26, 2025
Our Job No.: 2325
Location: Mccoy's Creek Channel Improvements

Section 1 Welding Beams and C-Channels

Idle Equipment Rate Charged at 50% Blue Book Value

## LABOR

| EMP. NO. | | EMPLOYEE'S NAME | OCCUPATION | HOURS | RATE | AMOUNT |
|---|---|---|---|---|---|---|
| 1 | 6514 | Scott Brunette | Superintendent | 10.0 | $ 60.00 | $ 600.00 |
| 2 | 6613 | Christopher Griffin | Welder | 10.0 | $ 22.00 | $ 220.00 |
| 3 | 6547 | Marvin Hayes | Operator | 10.0 | $ 42.00 | $ 420.00 |
| 4 | 6823 | Obed Gonzzales | Lead man | 10.0 | $ 26.00 | $ 260.00 |
| 5 | 6822 | Luis Vera | Welder | 10.0 | $ 23.00 | $ 230.00 |
| 6 | 6515 | Caleb Johns | Pile driver | 10.0 | $ 22.00 | $ 220.00 |
| 7 | | | | | | $ - |
| 8 | | | | | | $ - |
| 9 | | | | | | $ - |
| 10 | | | | | | $ - |
| 11 | | | | | | $ - |
| | | | | SUBTOTAL | | $ 1,950.00 |
| | | | | BURDEN (44.52%) | | $ 868.14 |
| | | | | JBCCI MU 15.0% | | $ 422.72 |
| | | | | LABOR TOTAL | | $ 3,240.86 |

## EQUIPMENT

| EQUIP. NO. | | TYPE OF EQUIPMENT | HOURS | RATE | AMOUNT |
|---|---|---|---|---|---|
| 1 | BHC189 | Excavator | 10.0 | $ 133.37 | $ 1,333.70 |
| 2 | TKP299 | F-150 Pickup Truck | 10.0 | $ 45.36 | $ 453.60 |
| 3 | WLP013 | Welding Machine | 10.0 | $ 11.43 | $ 114.30 |
| 4 | WLP016 | Welding Machine | 10.0 | $ 11.43 | $ 114.30 |
| 5 | WLP017 | Welding Machine | 10.0 | $ 11.43 | $ 114.30 |
| 6 | | | | | $ - |
| 7 | | | | | $ - |
| 8 | | | | | $ - |
| 9 | | | | | $ - |
| | | | EQUIPMENT SUBTOTAL | | $ 2,130.20 |
| | | | JBCCI MU 15.0% | | $ 319.53 |
| | | | EQUIPMENT TOTAL | | $ 2,449.73 |

## MATERIALS

| | DESCRIPTION | QUANTITY | UNIT | PRICE | AMOUNT |
|---|---|---|---|---|---|
| 1 | | | | | $ - |
| | | | MATERIALS SUBTOTAL | | $ - |
| | | | Sales Tax (7.5%) | | $ - |
| | | | MATERIALS Mark Up (15.0%) | | $ - |
| | | | MATERIALS TOTAL | | $ - |

## SUBCONTRACTORS

| | DESCRIPTION | QUANTITY | UNIT | PRICE | AMOUNT |
|---|---|---|---|---|---|
| 1 | | | | | $ - |
| | | | SUBCONTRACTS SUBTOTAL | | $ - |
| | | | SUBCONTRACTS MU (10%) | | $ - |
| | | | SUBCONTRACTS TOTAL | | $ - |

DESCRIPTION OF WORK: Installation of 8" Beams and C-Channel in setion 1

| | | |
|---|---|---|
| SUBTOTAL | $ | 5,690.59 |
| 0.53% Bond | $ | 30.16 |
| **GRAND TOTAL** | **$** | **5,720.75** |

Report Submitted by: _____

Docusign Envelope ID: F54DB230-A150-452A-B3F0-14C4A48C193C

J. B. COXWELL CONTRACTING, INC.
6741 Lloyd Road West, Jacksonville, FL 32254-1249
Telephone (904) 786-1120 * Fax (904) 783-2970

**FORCE ACCOUNT**
**DAILY TIME REPORT**

NAME: Carl Padgett GAI Consultants
Date: March 27, 2025

MAILING ADDRESS: 12574 Flagler Center Blvd Suite 202
Our Job No.: 2325

CITY: Jacksonville Fl 32258
Location: Mccoy's Creek Channel Improvements

Section 1 Welding Beams and C-Channels

Idle Equipment Rate Charged at 50% Blue Book Value

## LABOR

| EMP. NO. | | EMPLOYEE'S NAME | OCCUPATION | HOURS | RATE | AMOUNT |
|---|---|---|---|---|---|---|
| 1 | 6514 | Scott Brunette | Superintendent | 10.0 | $ 60.00 | $ 600.00 |
| 2 | 6613 | Christopher Griffin | Welder | 10.0 | $ 22.00 | $ 220.00 |
| 3 | 6547 | Marvin Hayes | Operator | 10.0 | $ 42.00 | $ 420.00 |
| 4 | 6823 | Obed Gonzzeles | Lead man | 10.0 | $ 26.00 | $ 260.00 |
| 5 | 6822 | Luis Vera | Welder | 10.0 | $ 23.00 | $ 230.00 |
| 6 | 6515 | Caleb Johns | Pile driver | 10.0 | $ 22.00 | $ 220.00 |
| 7 | | | | | | $ - |
| 8 | | | | | | $ - |
| 9 | | | | | | $ - |
| 10 | | | | | | $ - |
| 11 | | | | | | $ - |
| | | | | SUBTOTAL | | $ 1,950.00 |
| | | | | BURDEN (44.52%) | | $ 868.14 |
| | | | | JBCCI MU 15.0% | | $ 422.72 |
| | | | | LABOR TOTAL | | $ 3,240.86 |

## EQUIPMENT

| EQUIP. NO. | | TYPE OF EQUIPMENT | HOURS | RATE | AMOUNT |
|---|---|---|---|---|---|
| 1 | BHC189 | Excavator | 10.0 | $ 133.37 | $ 1,333.70 |
| 2 | TKP299 | F-150 Pickup Truck | 10.0 | $ 45.36 | $ 453.60 |
| 3 | WLP013 | Welding Machine | 10.0 | $ 11.43 | $ 114.30 |
| 4 | WLP016 | Welding Machine | 10.0 | $ 11.43 | $ 114.30 |
| 5 | WLP017 | Welding Machine | 10.0 | $ 11.43 | $ 114.30 |
| 6 | | | | | $ - |
| 7 | | | | | $ - |
| 8 | | | | | $ - |
| 9 | | | | | $ - |
| | | | EQUIPMENT SUBTOTAL | | $ 2,130.20 |
| | | | JBCCI MU 15.0% | | $ 319.53 |
| | | | EQUIPMENT TOTAL | | $ 2,449.73 |

## MATERIALS

| | DESCRIPTION | QUANTITY | UNIT | PRICE | AMOUNT |
|---|---|---|---|---|---|
| 1 | | | | | $ - |
| | | | MATERIALS SUBTOTAL | | $ - |
| | | | Sales Tax (7.5%) | | $ - |
| | | | MATERIALS Mark Up (15.0%) | | $ - |
| | | | MATERIALS TOTAL | | $ - |

## SUBCONTRACTORS

| | DESCRIPTION | QUANTITY | UNIT | PRICE | AMOUNT |
|---|---|---|---|---|---|
| 1 | | | | | $ - |
| | | | SUBCONTRACTS SUBTOTAL | | $ - |
| | | | SUBCONTRACTS MU (10%) | | $ - |
| | | | SUBCONTRACTS TOTAL | | $ - |

DESCRIPTION OF WORK: Installation of 8" Beams and C-Channel in setion 1

| | | |
|---|---|---|
| SUBTOTAL | $ | 5,690.59 |
| 0.53% Bond | $ | 30.16 |
| **GRAND TOTAL** | **$** | **5,720.75** |

Report Submitted by: _____

Docusign Envelope ID: F54DB230-A150-452A-B3F0-14C4A48C193C

J. B. COXWELL CONTRACTING, INC.
6741 Lloyd Road West, Jacksonville, FL 32254-1249
Telephone (904) 786-1120 * Fax (904) 783-2970

**FORCE ACCOUNT**
**DAILY TIME REPORT**

NAME: Carl Padgett GAI Consultants
Date: March 28, 2025

MAILING ADDRESS: 12574 Flagler Center Blvd Suite 202
Our Job No.: 2325

CITY: Jacksonville Fl. 32258
Location: Mccoy's Creek Channel Improvements

Section 1 Welding Beams and C-Channels

Idle Equipment Rate Charged at 50% Blue Book Value

## LABOR

| EMP. NO. | | EMPLOYEE'S NAME | OCCUPATION | HOURS | RATE | AMOUNT |
|---|---|---|---|---|---|---|
| 1 | 6514 | Scott Brunette | Superintendent | 8.0 | $ 60.00 | $ 480.00 |
| 2 | 6613 | Christopher Griffin | Welder | 8.0 | $ 22.00 | $ 176.00 |
| 3 | 6547 | Marvin Hayes | Operator | 8.0 | $ 42.00 | $ 336.00 |
| 4 | 6823 | Obed Gonzzales | Lead man | 8.0 | $ 26.00 | $ 208.00 |
| 5 | 6822 | Luis Vera | Welder | 8.0 | $ 23.00 | $ 184.00 |
| 6 | 6515 | Caleb Johns | Pile driver | 8.0 | $ 22.00 | $ 176.00 |
| 7 | | | | | | $ - |
| 8 | | | | | | $ - |
| 9 | | | | | | $ - |
| 10 | | | | | | $ - |
| 11 | | | | | | $ - |
| | | | | SUBTOTAL | | $ 1,560.00 |
| | | | | BURDEN (44.52%) | | $ 694.51 |
| | | | | JBCCI MU 15.0% | | $ 338.18 |
| | | | | LABOR TOTAL | | $ 2,592.69 |

## EQUIPMENT

| EQUIP. NO. | | TYPE OF EQUIPMENT | HOURS | RATE | AMOUNT |
|---|---|---|---|---|---|
| 1 | BHC189 | Excavator | 8.0 | $ 133.37 | $ 1,066.96 |
| 2 | TKP299 | F-150 Pickup Truck | 8.0 | $ 45.36 | $ 362.88 |
| 3 | WLP013 | Welding Machine | 8.0 | $ 11.43 | $ 91.44 |
| 4 | WLP016 | Welding Machine | 8.0 | $ 11.43 | $ 91.44 |
| 5 | WLP017 | Welding Machine | 8.0 | $ 11.43 | $ 91.44 |
| 6 | | | | | $ - |
| 7 | | | | | $ - |
| 8 | | | | | $ - |
| 9 | | | | | $ - |
| | | | EQUIPMENT SUBTOTAL | | $ 1,704.16 |
| | | | JBCCI MU 15.0% | | $ 255.62 |
| | | | EQUIPMENT TOTAL | | $ 1,959.78 |

## MATERIALS

| | DESCRIPTION | QUANTITY | UNIT | PRICE | AMOUNT |
|---|---|---|---|---|---|
| 1 | | | | | $ - |
| | | | MATERIALS SUBTOTAL | | $ - |
| | | | Sales Tax (7.5%) | | $ - |
| | | | MATERIALS Mark Up (15.0%) | | $ - |
| | | | MATERIALS TOTAL | | $ - |

## SUBCONTRACTORS

| | DESCRIPTION | QUANTITY | UNIT | PRICE | AMOUNT |
|---|---|---|---|---|---|
| 1 | | | | | $ - |
| | | | SUBCONTRACTS SUBTOTAL | | $ - |
| | | | SUBCONTRACTS MU (10%) | | $ - |
| | | | SUBCONTRACTS TOTAL | | $ - |

DESCRIPTION OF WORK: Installation of 8" Beams and C-Channel in selion 1

| | | |
|---|---|---|
| SUBTOTAL | $ | 4,552.47 |
| 0.53% Bond | $ | 24.13 |
| **GRAND TOTAL** | **$** | **4,576.60** |

Report Submitted by: _____

Docusign Envelope ID: F54DB230-A150-452A-B3F0-14C4A48C193C

J. B. COXWELL CONTRACTING, INC.
6741 Lloyd Road West, Jacksonville, FL 32254-1249
Telephone (904) 786-1120 * Fax (904) 783-2970

**FORCE ACCOUNT**
**DAILY TIME REPORT**

NAME: Carl Padgett GAI Consultants
MAILING ADDRESS: 12574 Flagler Center Blvd Suite 202
CITY: Jacksonville Fl. 32258

Date: March 31, 2025
Our Job No.: 2325
Location: Mccoy's Creek Channel Improvements

Section 1 Welding Beams and C-Channels

Idle Equipment Rate Charged at 50% Blue Book Value

## LABOR

| EMP. NO. | | EMPLOYEE'S NAME | OCCUPATION | HOURS | RATE | AMOUNT |
|---|---|---|---|---|---|---|
| 1 | 6514 | Scott Brunette | Superintendent | 10.0 | $ 60.00 | $ 600.00 |
| 2 | 6613 | Christopher Griffin | Welder | 10.0 | $ 22.00 | $ 220.00 |
| 3 | 6547 | Marvin Hayes | Operator | 10.0 | $ 42.00 | $ 420.00 |
| 4 | 6623 | Obed Gonzzales | Lead man | 10.0 | $ 26.00 | $ 260.00 |
| 5 | 6622 | Luis Vera | Welder | 10.0 | $ 23.00 | $ 230.00 |
| 6 | 6515 | Caleb Johns | Pile driver | 10.0 | $ 22.00 | $ 220.00 |
| 7 | | | | | | $ - |
| 8 | | | | | | $ - |
| 9 | | | | | | $ - |
| 10 | | | | | | $ - |
| 11 | | | | | | $ - |
| | | | | SUBTOTAL | | $ 1,950.00 |
| | | | | BURDEN (44.52%) | | $ 868.14 |
| | | | | JBCCI MU 15.0% | | $ 422.72 |
| | | | | LABOR TOTAL | | $ 3,240.86 |

## EQUIPMENT

| EQUIP. NO. | | TYPE OF EQUIPMENT | HOURS | RATE | AMOUNT |
|---|---|---|---|---|---|
| 1 | BHC189 | Excavator | 10.0 | $ 133.37 | $ 1,333.70 |
| 2 | TKP299 | F-150 Pickup Truck | 10.0 | $ 45.36 | $ 453.60 |
| 3 | WLP013 | Welding Machine | 10.0 | $ 11.43 | $ 114.30 |
| 4 | WLP016 | Welding Machine | 10.0 | $ 11.43 | $ 114.30 |
| 5 | WLP017 | Welding Machine | 10.0 | $ 11.43 | $ 114.30 |
| 6 | | | | | $ - |
| 7 | | | | | $ - |
| 8 | | | | | $ - |
| 9 | | | | | $ - |
| | | | EQUIPMENT SUBTOTAL | | $ 2,130.20 |
| | | | JBCCI MU 15.0% | | $ 319.53 |
| | | | EQUIPMENT TOTAL | | $ 2,449.73 |

## MATERIALS

| | DESCRIPTION | QUANTITY | UNIT | PRICE | AMOUNT |
|---|---|---|---|---|---|
| 1 | | | | | $ - |
| | | | MATERIALS SUBTOTAL | | $ - |
| | | | Sales Tax (7.5%) | | $ - |
| | | | MATERIALS Mark Up (15.0%) | | $ - |
| | | | MATERIALS TOTAL | | $ - |

## SUBCONTRACTORS

| | DESCRIPTION | QUANTITY | UNIT | PRICE | AMOUNT |
|---|---|---|---|---|---|
| 1 | | | | | $ - |
| | | | SUBCONTRACTS SUBTOTAL | | $ - |
| | | | SUBCONTRACTS MU (10%) | | $ - |
| | | | SUBCONTRACTS TOTAL | | $ - |

DESCRIPTION OF WORK: Installation of 8" Beams and C-Channel in setion 1

| | | |
|---|---|---|
| SUBTOTAL | $ | 5,690.59 |
| 0.53% Bond | $ | 30.16 |
| **GRAND TOTAL** | **$** | **5,720.75** |

Report Submitted by:

Docusign Envelope ID: F54DB230-A150-452A-B3F0-14C4A48C193C

J. B. COXWELL CONTRACTING, INC.
6741 Lloyd Road West, Jacksonville, FL 32254-1249
Telephone (904) 786-1120 * Fax (904) 783-2970

**FORCE ACCOUNT**
**DAILY TIME REPORT**

NAME: Carl Padgett GAI Consultants
MAILING ADDRESS: 12574 Flagler Center Blvd Suite 202
CITY: Jacksonville Fl. 32258

Date: April 1, 2025
Our Job No.: 2326
Location: Mccoy's Creek Channel Improvements

Section 1 Welding Beams and C-Channels

Idle Equipment Rate Charged at 50% Blue Book Value

## LABOR

| EMP. NO. | | EMPLOYEE'S NAME | OCCUPATION | HOURS | RATE | AMOUNT |
|---|---|---|---|---|---|---|
| 1 | 6514 | Scott Brunette | Superintendent | 10.0 | $ 60.00 | $ 600.00 |
| 2 | 6613 | Christopher Griffin | Welder | 10.0 | $ 22.00 | $ 220.00 |
| 3 | 6547 | Marvin Hayes | Operator | 10.0 | $ 42.00 | $ 420.00 |
| 4 | 6823 | Obed Gonzzales | Lead man | 10.0 | $ 26.00 | $ 260.00 |
| 5 | 6822 | Luis Vera | Welder | 10.0 | $ 23.00 | $ 230.00 |
| 6 | 6515 | Caleb Johns | Pile driver | 10.0 | $ 22.00 | $ 220.00 |
| 7 | | | | | | $ - |
| 8 | | | | | | $ - |
| 9 | | | | | | $ - |
| 10 | | | | | | $ - |
| 11 | | | | | | $ - |
| | | | | SUBTOTAL | | $ 1,950.00 |
| | | | | BURDEN (44.52%) | | $ 868.14 |
| | | | | JBCCI MU 15.0% | | $ 422.72 |
| | | | | LABOR TOTAL | | $ 3,240.86 |

## EQUIPMENT

| EQUIP. NO. | | TYPE OF EQUIPMENT | HOURS | RATE | AMOUNT |
|---|---|---|---|---|---|
| 1 | BHC189 | Excavator | 10.0 | $ 133.37 | $ 1,333.70 |
| 2 | TKP299 | F-150 Pickup Truck | 10.0 | $ 45.36 | $ 453.60 |
| 3 | WLP013 | Welding Machine | 10.0 | $ 11.43 | $ 114.30 |
| 4 | WLP016 | Welding Machine | 10.0 | $ 11.43 | $ 114.30 |
| 5 | WLP017 | Welding Machine | 10.0 | $ 11.43 | $ 114.30 |
| 6 | | | | | $ - |
| 7 | | | | | $ - |
| 8 | | | | | $ - |
| 9 | | | | | $ - |
| | | | EQUIPMENT SUBTOTAL | | $ 2,130.20 |
| | | | JBCCI MU 15.0% | | $ 319.53 |
| | | | EQUIPMENT TOTAL | | $ 2,449.73 |

## MATERIALS

| | DESCRIPTION | QUANTITY | UNIT | PRICE | AMOUNT |
|---|---|---|---|---|---|
| 1 | | | | | $ - |
| | | | MATERIALS SUBTOTAL | | $ - |
| | | | Sales Tax (7.5%) | | $ - |
| | | | MATERIALS Mark Up (15.0%) | | $ - |
| | | | MATERIALS TOTAL | | $ - |

## SUBCONTRACTORS

| | DESCRIPTION | QUANTITY | UNIT | PRICE | AMOUNT |
|---|---|---|---|---|---|
| 1 | | | | | $ - |
| | | | SUBCONTRACTS SUBTOTAL | | $ - |
| | | | SUBCONTRACTS MU (10%) | | $ - |
| | | | SUBCONTRACTS TOTAL | | $ - |

DESCRIPTION OF WORK: Installation of 6" Beams and C-Channel in setion 1

| | | |
|---|---|---|
| SUBTOTAL | $ | 5,690.59 |
| 0.53% Bond | $ | 30.16 |
| **GRAND TOTAL** | **$** | **5,720.75** |

Report Submitted by: _____

EquipmentWatch.

www.equipmentwatch.com

All prices shown in US Dollars ($)

## Adjustments for Lincoln 500 Welding Machine in JBC Fleet

January 24, 2024

**Lincoln VANTAGE 500 (disc. 2014)**
Portable Welders

Size Class:
401 - 500 A
Weight:
N/A

### Configuration for VANTAGE 500 (disc. 2014)

| | | | |
|---|---|---|---|
| Amps | **500** | Current | **DC** |
| Horsepower | **45 hp** | Mounting | **Skid** |
| Power Mode | **Diesel** | | |

### Blue Book Rates

** FHWA Rate is equal to the monthly ownership cost divided by 176 plus the hourly estimated operating cost.

| | Ownership Costs | | | | Estimated Operating Costs | FHWA Rate** |
|---|---|---|---|---|---|---|
| | Monthly | Weekly | Daily | Hourly | Hourly | Hourly |
| Published Rates | USD $310.00 | USD $97.00 | USD $22.00 | USD $3.00 | USD $9.65 | USD $11.41 |
| **Adjustments** | | | | | | |
| Region ( Jacksonville, Florida, 101.3%) | USD $4.03 | USD $1.13 | USD $0.29 | USD $0.04 | | |
| Model Year (2014: 100%) | - | - | - | - | | |
| Adjusted Hourly Ownership Cost (100%) | - | - | - | - | | |
| Hourly Operating Cost (100%) | | | | | - | |
| **Total:** | **USD $314.03** | **USD $98.13** | **USD $22.29** | **USD $3.04** | **USD $9.65** | **USD $11.41** |

### Non-Active Use Rates

| | Hourly |
|---|---|
| Standby Rate | USD $1.41 |
| Idling Rate | USD $9.49 |

### Rate Element Allocation

| Element | Percentage | Value |
|---|---|---|
| Depreciation (ownership) | 40% | USD $124.00/mo |
| Overhaul (ownership) | 21% | USD $65.10/mo |
| CFC (ownership) | 20% | USD $62.00/mo |
| Indirect (ownership) | 19% | USD $58.90/mo |
| Fuel (operating) @ USD 4.25 | 79.9% | USD $7.71/hr |

Revised Date: 1st quarter 2024

These are the most accurate rates for the selected Revision Date(s). However, due to more frequent online updates, these rates may not match Rental Rate Blue Book® Print. Visit the Cost Recovery Product Guide on our Help page for more information.

The equipment represented in this report has been exclusively prepared for TRACY KALVIG (mattd@jbcoxwell.com)

All material herein © 2003-2024 Randall-Reilly All rights reserved.

Docusign Envelope ID: F54DB230-A150-452A-B3F0-14C4A48C193C

EquipmentWatch.

www.equipmentwatch.com

All prices shown in US Dollars ($)

## Rental Rate Blue Book®

January 24, 2024

**Ford F-150 XLT 4X4 GAS**
Light Duty Trucks

Size Class:
2
Weight:
N/A

### Configuration for F-150 XLT 4X4 GAS

| | | | |
|---|---|---|---|
| Power Mode | Gasoline | Wheelbase | 122.8 Inches |
| Model Trim | XLT | Gross Vehicle Weight Rating | 6050 Pounds |

### Blue Book Rates

** FHWA Rate is equal to the monthly ownership cost divided by 176 plus the hourly estimated operating cost.

| | Ownership Costs | | | | Estimated Operating Costs | FHWA Rate** |
|---|---|---|---|---|---|---|
| | Monthly | Weekly | Daily | Hourly | Hourly | Hourly |
| Published Rates | USD $3,125.00 | USD $880.00 | USD $220.00 | USD $23.00 | USD $27.77 | USD $45.58 |
| Adjustments | | | | | | |
| Region (Jacksonville, Florida: 99.5%) | (USD $15.68) | (USD $4.40) | (USD $1.10) | (USD $0.17) | | |
| Model Year (2022: 99.24%) | (USD $23.78) | (USD $6.67) | (USD $1.67) | (USD $0.25) | | |
| Adjusted Hourly Ownership Cost (100%) | - | - | | | | |
| Hourly Operating Cost (100%) | | | | | | |
| Total: | USD $3,085.55 | USD $868.93 | USD $217.23 | USD $22.58 | USD $27.77 | USD $45.36 |

### Non-Active Use Rates

| | Hourly |
|---|---|
| Standby Rate | USD $9.85 |
| Idling Rate | USD $34.94 |

### Rate Element Allocation

| Element | Percentage | Value |
|---|---|---|
| Depreciation (ownership) | 23% | USD $721.00/mo |
| Overhead (ownership) | 44% | USD $1,379.40/mo |
| CPC (ownership) | 16% | USD $501.63/mo |
| Indirect (ownership) | 17% | USD $532.95/mo |
| Fuel (operating) @ USD 3.24 | 62.48% | USD $17.35/hr |

Revised Date: 1st quarter 2024

These are the most accurate rates for the selected Revision Date(s). However, due to more frequent online updates, these rates may not match Rental Rate Blue Book® Print. View the Cost Recovery Product Guide on our Help page for more information.

The equipment represented in this report has been exclusively prepared for TRACY KALVIG (mattd@jbtcoxwell.com)

All material here is © 2003-2024 RandalsReilly All rights reserved.

EquipmentWatch.

www.equipmentwatch.com

# Rental Rate Blue Book®, O&O Rates Report for CAT 323 in JBC Fleet

January 24, 2024

**Caterpillar 323**
Crawler Mounted Hydraulic Excavators

Size Class:
**24.5 - 28.4 mt**
Weight:
**N/A**

## Configuration for 323

| | | | |
|---|---|---|---|
| Bucket Capacity | **1.8 cu yd** | Horsepower | **162 hp** |
| Operating Weight | **56200 lbs** | Power Mode | **Diesel** |

## Blue Book Rates

** FHWA Rate is equal to the monthly ownership cost divided by 176 plus the hourly estimated operating cost.

| | Ownership Costs | | | | Estimated Operating Costs | FHWA Rate** |
|---|---|---|---|---|---|---|
| | **Monthly** | **Weekly** | **Daily** | **Hourly** | **Hourly** | **Hourly** |
| Published Rates | USD $15,185.00 | USD $4,250.00 | USD $1,065.00 | USD $160.00 | USD $47.64 | USD $133.92 |
| **Adjustments** | | | | | | |
| Region ( Jacksonville, Florida: 99.4%) | (USD $91.11) | (USD $25.50) | (USD $6.39) | (USD $0.96) | | |
| Model Year (2023: 99.97%) | (USD $4.85) | (USD $1.36) | (USD $0.34) | (USD $0.05) | | |
| Adjusted Hourly Ownership Cost (100%) | - | - | - | - | | |
| Hourly Operating Cost (100%) | | | | | - | |
| **Total:** | **USD $15,089.04** | **USD $4,223.14** | **USD $1,058.27** | **USD $158.99** | **USD $47.64** | **USD $133.37** |

## Non-Active Use Rates

| | Hourly |
|---|---|
| Standby Rate | USD $47.15 |
| Idling Rate | USD $98.57 |

## Rate Element Allocation

| Element | Percentage | Value |
|---|---|---|
| Depreciation (ownership) | 30% | USD $4,555.50/mo |
| Overhaul (ownership) | 45% | USD $6,833.25/mo |
| CFC (ownership) | 15% | USD $2,277.75/mo |
| Indirect (ownership) | 10% | USD $1,518.50/mo |
| Fuel (operating) @ USD 4.15 | 26.95% | USD $12.84/hr |

Revised Date: 1st quarter 2024

www.equipmentwatch.com

All material herein © 2003-2024 Randall-Reilly All rights reserved.

Docusign Envelope ID: F54DB230-A150-452A-B3F0-14C4A48C193C

# INVOICE

17 September 2024

Invoice No. 117 -104333

JD FIELDS & COMPANY, INC.
A FIELDS COMPANY

RECEIVED
SEP 23 2024
J. B. Coxwell Contracting, Inc.

**Wire Payment Instructions:**
JP Morgan Chase Bank - Houston, TX
WIRE Routing # 021000021
ACH Routing # 111000614
SWIFT Code CHASUS33
Account #780158940
Please include invoice number

***Bill to:***

J.B. COXWELL CONTRACTING, INC.
6741 LLOYD ROAD WEST
JACKSONVILLE, FL 32254 US

***Ship to:***

J.B. COXWELL CONTRACTING, INC.
ONE RIVERSIDE AVE.
JACKSONVILLE, FL 32254

| Order Date | Customer PO | Ship Via | SHIPPING TERMS |
|---|---|---|---|
| 9/17/2024 | 2325-56 | TRUCK | FOB SHIP PT W/FULL FRT ALLOWED |

| Qty Shipped | Description | Unit Price | UOM | Extended Price |
|---|---|---|---|---|
| 12.0000 | W8 X 48 12/55' | 1,828.20 | EA | $ 21,938.40 |
| 8.0000 | C10 X 20 8/60' | 795.00 | EA | $ 6,360.00 |
| | NON TAXABLE FREIGHT INCLUDED IN TAXES BELOW: 1 EA @ $3,350.00 | | | |

MSDS sheets related to this material have been previously supplied. Should you require additional information please contact our Houston office

A FIELDS COMPANY

**Sale Amount:** $ 28,298.40

**Comments:**

**Sales Taxes:**

| | | |
|---|---|---|
| NON TAXABLE FREIGHT | | 3,350.00 |
| FLORIDA SALES TAX | 6.0000 | 1,697.90 |
| DUVAL COUNTY, FL TAX | 1.5000 | 75.00 |
| | | $ 33,421.30 |

**Terms:** NET 30 DAYS

**Due in our Houston office in US FUNDS**

**Customer No.:** JBCCON117C

For Office Use Only 244315

**Remittance Address:**

**P.O. Box 134401 Houston TX 77219-4401**
**Tel: (281) 558-7199 Fax: (281) 558-0446**

Docusign Envelope ID: F54DB230-A150-452A-B3F0-14C4A48C193C

a 01 H 1

**ROBERTS OXYGEN COMPANY, INC.**
15830 REDLAND ROAD
PO BOX 5507
ROCKVILLE, MD 20855
(904) 395-4215

# INVOICE

| | | |
|---|---|---|
| Invoice Number | 098535 | |
| Invoice Date | 09/06/24 | |
| Invoice Amount | 1100.13 | UR |
| Customer Number | 200495 | |

**SOLD TO: 200495**
J B COXWELL CONTRACTING
6741 LLOYD RD W
JACKSONVILLE, FL 32254

**SHIP TO: 2**
J B COXWELL CONTRACTING
1 RIVERSIDE AVENUE
JACKSONVILLE, FL 32202

**REMIT TO:** ROBERTS OXYGEN COMPANY, INC. PO Box 5507 Rockville, MD 20855

Please detach this portion and return with your payment.

Terms - Net on Receipt of Invoice, 1.5% monthly finance charge over 30 days, 18.0% per annum.

| CUSTOMER NO. | PURCHASE ORDER NO. | DATE DELIVERED | DELIVERY TICKET | BRANCH | SHIPPED VIA |
|---|---|---|---|---|---|
| 200495 | 2325-08 | 09/06/24 | 819799 | JACKSONVILLE | DELIVERED |

| INVOICE NO. | INVOICE DATE | ORDER PLACED BY | PLACED BY PHONE NO. |
|---|---|---|---|
| 098535 | 09/06/24 | SCOTT BRUNETTE | 386-288-7908 |

| QUANTITY SHIPPED | QUANTITY RETURNED OR BACKORDERED | PART NUMBER | DESCRIPTION | UNIT PRICE | UNIT | TOTAL CHARGED |
|---|---|---|---|---|---|---|
| 4 | | R85CT | CHEMTANE 60 LB | 200.000 | EA | 800.00 |
| | | | PICK UP EMPTY R5PG | | | |
| 7 | 7 | R0 | OXYGEN, 282 CU FT | 25.000 | EA | 175.00 |
| | 7 | R5PG | ACETYLENE, #5-LARGE | | EA | .00 |

No Delivery Ticket
Received From Field

**NEW e-Storefront...Manage Your Account 24/7!**
Pay invoices online by credit card. Place your orders with a customized shopping list, review cylinder balances, delivery tickets and statements.
Sign up today at **www.robertsoxygen.com** click on **Manage Your Account** then **Request Account.**

For questions about this invoice
Please call: (904) 395-4215

Fed ID# 520822869, Duns# 042646877, UEI# HF9HCHM74RY5
PLEASE VISIT OUR WEBSITE AT WWW.ROBERTSOXYGEN.COM

| | | |
|---|---|---|
| | SUB TOTAL | 975.00 |
| FL | SALES TAX | 73.13 |
| | DELIVERY CHARGE | 52.00 |
| | AMOUNT DUE ----------> | 1100.13 |

FL MED GAS WHLSE DIST LIC 311282 EXPIRES 10/31/25
SDS available at https://sds.robertsoxygen.com

**PLEASE REMIT TO:**
ROBERTS OXYGEN COMPANY, INC.
PO Box 5507
Rockville, MD 20855

Docusign Envelope ID: F54DB230-A150-452A-B3F0-14C4A48C193C

a 01 H 1

**ROBERTS OXYGEN COMPANY, INC.**
15830 REDLAND ROAD
PO BOX 5507
ROCKVILLE, MD 20855
(904) 395-4215

# INVOICE

| | |
|---|---|
| Invoice Number | 115645 |
| Invoice Date | 09/16/24 |
| Invoice Amount | 314.01 UR |
| Customer Number | 200495 |

**SOLD TO: 200495**
J B COXWELL CONTRACTING
6741 LLOYD RD W
JACKSONVILLE, FL 32254

**SHIP TO: 2**
J B COXWELL CONTRACTING
1 RIVERSIDE AVENUE
JACKSONVILLE, FL 32202

**REMIT TO:** ROBERTS OXYGEN COMPANY, INC. PO Box 5507 Rockville, MD 20855
Please detach this portion and return with your payment.

Terms - Net on Receipt of Invoice, 1.5% monthly finance charge over 30 days, 18.0% per annum.

| CUSTOMER NO. | PURCHASE ORDER NO. | DATE DELIVERED | DELIVERY TICKET | BRANCH | SHIPPED VIA |
|---|---|---|---|---|---|
| 200495 | ~~2325-16~~ | 09/16/24 | 832525 | JACKSONVILLE | DELIVERED |

| INVOICE NO. | INVOICE DATE | ORDER PLACED BY | PLACED BY PHONE NO. |
|---|---|---|---|
| 115645 | 09/16/24 | SCOTT BURNETTE | 386-288-7908 |

| QUANTITY SHIPPED | QUANTITY RETURNED OR BACKORDERED | PART NUMBER | DESCRIPTION | UNIT PRICE | UNIT | TOTAL CHARGED |
|---|---|---|---|---|---|---|
| 100 | | VY7018310 | VICTORY 1/8" 7018 electrode | 2.921 | LB | 292.10 |

P.O. 2325-12

Job # 2325

4630 0130

**NEW e-Storefront...Manage Your Account 24/7!**
Pay invoices online by credit card. Place your orders with a customized shopping list, review cylinder balances, delivery tickets and statements.
Sign up today at **www.robertsoxygen.com** click on **Manage Your Account** then **Request Account.**

*For questions about this invoice*
Please call: (904) 395-4215

Fed ID# 520822869, Duns# 042646877, UEI# HF9HCHM74RY5
PLEASE VISIT OUR WEBSITE AT WWW.ROBERTSOXYGEN.COM

| | |
|---|---|
| SUB TOTAL | 292.10 |
| FL SALES TAX | 21.91 |
| DELIVERY CHARGE | .00 |
| AMOUNT DUE ----------> | 314.01 |

FL MED GAS WHLSE DIST LIC 311282 EXPIRES 10/31/25
SDS available at https://sds.robertsoxygen.com

**PLEASE REMIT TO:**
ROBERTS OXYGEN COMPANY, INC.
PO Box 5507
Rockville, MD 20855

Docusign Envelope ID: F54DB230-A150-452A-B3F0-14C4A48C193C

a 01 H 2

# INVOICE

**ROBERTS OXYGEN COMPANY, INC.**
15830 REDLAND ROAD
PO BOX 5507
ROCKVILLE, MD 20855
(904) 395-4215

| | | |
|---|---|---|
| Invoice Number | 130534 | |
| Invoice Date | 09/23/24 | |
| Invoice Amount | 628.02 | UR |
| Customer Number | 200495 | |

**SOLD TO: 200495**
J B COXWELL CONTRACTING
6741 LLOYD RD W
JACKSONVILLE, FL 32254

**SHIP TO: 2**
J B COXWELL CONTRACTING
1 RIVERSIDE AVENUE
JACKSONVILLE, FL 32202

**REMIT TO:** ROBERTS OXYGEN COMPANY, INC. PO Box 5507 Rockville, MD 20855
Please detach this portion and return with your payment.

Terms - Net on Receipt of Invoice, 1.5% monthly finance charge over 30 days, 18.0% per annum.

| CUSTOMER NO. | PURCHASE ORDER NO. | DATE DELIVERED | DELIVERY TICKET | BRANCH | SHIPPED VIA |
|---|---|---|---|---|---|
| 200495 | 2325-12 | 09/23/24 | 841924 | JACKSONVILLE | DELIVERED |

| INVOICE NO. | INVOICE DATE | ORDER PLACED BY | PLACED BY PHONE NO. |
|---|---|---|---|
| 130534 | 09/23/24 | SCOTT BURNETT | 386-288-7908 |

| QUANTITY SHIPPED | QUANTITY RETURNED OR BACKORDERED | PART NUMBER | DESCRIPTION | UNIT PRICE | UNIT | TOTAL CHARGED |
|---|---|---|---|---|---|---|
| 200 | | VY7018310 | VICTORY 1/8" 7018 electrode | 2.921 | LB | 584.20 |
| | | | Job #2325 | | | |
| | | | 4630 0130 | | | |

**NEW e-Storefront...Manage Your Account 24/7!**
Pay invoices online by credit card. Place your orders with a customized shopping list, review cylinder balances, delivery tickets and statements.
Sign up today at **www.robertsoxygen.com** click on **Manage Your Account** then **Request Account.**

For questions about this invoice
Please call: (904) 395-4215

Fed ID# 520822869, Duns# 042646877, UEI# HF9HCHM74RY5
PLEASE VISIT OUR WEBSITE AT WWW.ROBERTSOXYGEN.COM

| | |
|---|---|
| SUB TOTAL | 584.20 |
| FL SALES TAX | 43.82 |
| DELIVERY CHARGE | .00 |
| AMOUNT DUE ----------> | 628.02 |

FL MED GAS WHLSE DIST LIC 311282 EXPIRES 10/31/25
SDS available at https://sds.robertsoxygen.com

**PLEASE REMIT TO:**
ROBERTS OXYGEN COMPANY, INC.
PO Box 5507
Rockville, MD 20855

Docusign Envelope ID: F54DB230-A150-452A-B3F0-14C4A48C193C

a 01 H 1

**ROBERTS OXYGEN COMPANY, INC.**
15830 REDLAND ROAD
PO BOX 5507
ROCKVILLE, MD 20855
(904) 395-4215

# INVOICE

| | | |
|---|---|---|
| Invoice Number | 189703 | |
| Invoice Date | 10/21/24 | |
| Invoice Amount | 629.31 | UR |
| Customer Number | 200495 | |

**SOLD TO: 200495**
J B COXWELL CONTRACTING
6741 LLOYD RD W
JACKSONVILLE, FL 32254

**SHIP TO: 2**
J B COXWELL CONTRACTING
1 RIVERSIDE AVENUE
JACKSONVILLE, FL 32202

**REMIT TO:** ROBERTS OXYGEN COMPANY, INC. PO Box 5507 Rockville, MD 20855

Please detach this portion and return with your payment.

Terms - Net on Receipt of Invoice, 1.5% monthly finance charge over 30 days, 18.0% per annum.

| CUSTOMER NO. | PURCHASE ORDER NO. | DATE DELIVERED | DELIVERY TICKET | BRANCH | SHIPPED VIA |
|---|---|---|---|---|---|
| 200495 | 2325-12 | 10/21/24 | D43125 | JACKSONVILLE | PICK-UP |

| INVOICE NO. | INVOICE DATE | ORDER PLACED BY | PLACED BY PHONE NO. |
|---|---|---|---|
| 189703 | 10/21/24 | VICTOR BAZILE | |

| QUANTITY SHIPPED | QUANTITY RETURNED OR BACKORDERED | PART NUMBER | DESCRIPTION | UNIT PRICE | UNIT | TOTAL CHARGED |
|---|---|---|---|---|---|---|
| 200 | | VY7018310 | VICTORY 1/8" 7018 electrode | 2.927 | LB | 585.40 |

**NEW e-Storefront...Manage Your Account 24/7!**
Pay invoices online by credit card. Place your orders with a customized shopping list, review cylinder balances, delivery tickets and statements.
Sign up today at **www.robertsoxygen.com** click on **Manage Your Account** then **Request Account.**

For questions about this invoice
Please call: (904) 395-4215

Fed ID# 520822869, Duns# 042646877, UEI# HF9HCHM74RY5
PLEASE VISIT OUR WEBSITE AT WWW.ROBERTSOXYGEN.COM

| | | |
|---|---|---|
| | SUB TOTAL | 585.40 |
| FL | SALES TAX | 43.91 |
| | DELIVERY CHARGE | .00 |
| | AMOUNT DUE ----------> | 629.31 |

FL MED GAS WHLSE DIST LIC 311282 EXPIRES 10/31/25
SDS available at https://sds.robertsoxygen.com

**PLEASE REMIT TO:**
ROBERTS OXYGEN COMPANY, INC.
PO Box 5507
Rockville, MD 20855

Docusign Envelope ID: F54DB230-A150-452A-B3F0-14C4A48C193C

a 01 H 2

# INVOICE

**ROBERTS OXYGEN COMPANY, INC.**
15830 REDLAND ROAD
PO BOX 5507
ROCKVILLE, MD 20855
(904) 395-4215

| | | |
|---|---|---|
| Invoice Number | 184796 | |
| Invoice Date | 10/18/24 | |
| Invoice Amount | 213.25 | UR |
| Customer Number | 200495 | |

**SOLD TO: 200495**
J B COXWELL CONTRACTING
6741 LLOYD RD W
JACKSONVILLE, FL 32254

No Delivery Ticket
Received From Field

**SHIP TO: 2**
J B COXWELL CONTRACTING
1 RIVERSIDE AVENUE
JACKSONVILLE, FL 32202

**REMIT TO:** ROBERTS OXYGEN COMPANY, INC. PO Box 5507 Rockville, MD 20855
Please detach this portion and return with your payment.

Terms - Net on Receipt of Invoice, 1.5% monthly finance charge over 30 days, 18.0% per annum.

| CUSTOMER NO. | PURCHASE ORDER NO. | DATE DELIVERED | DELIVERY TICKET | BRANCH | SHIPPED VIA |
|---|---|---|---|---|---|
| 200495 | 2325-12 | 10/18/24 | 877772 | JACKSONVILLE | DELIVERED |

| INVOICE NO. | INVOICE DATE | ORDER PLACED BY | PLACED BY PHONE NO. |
|---|---|---|---|
| 184796 | 10/18/24 | SCOTT BURNETTE | 386-288-7908 |

| QUANTITY SHIPPED | QUANTITY RETURNED OR BACKORDERED | PART NUMBER | DESCRIPTION | UNIT PRICE | UNIT | TOTAL CHARGED |
|---|---|---|---|---|---|---|
| 6 | 6 | R0 | OXYGEN, 282 CU FT | 25.000 | EA | 150.00 |

**NEW e-Storefront...Manage Your Account 24/7!**
Pay invoices online by credit card. Place your orders with a customized shopping list, review cylinder balances, delivery tickets and statements.
Sign up today at **www.robertsoxygen.com** click on **Manage Your Account** then **Request Account.**

For questions about this invoice
Please call: (904) 395-4215

Fed ID# 520822869, Duns# 042646877, UEI# HF9HCHM74RY5
PLEASE VISIT OUR WEBSITE AT WWW.ROBERTSOXYGEN.COM

| | |
|---|---|
| SUB TOTAL | 150.00 |
| FL SALES TAX | 11.25 |
| DELIVERY CHARGE | 52.00 |
| AMOUNT DUE ----------> | 213.25 |

FL MED GAS WHLSE DIST LIC 311282 EXPIRES 10/31/25
SDS available at https://sds.robertsoxygen.com

**PLEASE REMIT TO:**
ROBERTS OXYGEN COMPANY, INC.
PO Box 5507
Rockville, MD 20855

Docusign Envelope ID: F54DB230-A150-452A-B3F0-14C4A48C193C

a 01 H 1

**ROBERTS OXYGEN COMPANY, INC.**
15830 REDLAND ROAD
PO BOX 5507
ROCKVILLE, MD 20855
(904) 395-4215

# INVOICE

| | | |
|---|---|---|
| Invoice Number | 501601 | |
| Invoice Date | 03/26/25 | |
| Invoice Amount | 228.93 | UR |
| Customer Number | 200495 | |

**SOLD TO: 200495**
J B COXWELL CONTRACTING
6741 LLOYD RD W
JACKSONVILLE, FL 32254

**SHIP TO: 2**
J B COXWELL CONTRACTING
1 RIVERSIDE AVENUE
JACKSONVILLE, FL 32202

**REMIT TO:** ROBERTS OXYGEN COMPANY, INC. PO Box 5507 Rockville, MD 20855

Please detach this portion and return with your payment.

Terms - Net on Receipt of Invoice, 1.5% monthly finance charge over 30 days, 18.0% per annum.

| CUSTOMER NO. | PURCHASE ORDER NO. | DATE DELIVERED | DELIVERY TICKET | BRANCH | SHIPPED VIA |
|---|---|---|---|---|---|
| 200495 | 2325-08 | 03/26/25 | 076374 | JACKSONVILLE | DELIVERED |

| INVOICE NO. | INVOICE DATE | ORDER PLACED BY | PLACED BY PHONE NO. |
|---|---|---|---|
| 501601 | 03/26/25 | AUTO | 386-288-7908 |

| QUANTITY SHIPPED | QUANTITY RETURNED OR BACKORDERED | PART NUMBER | DESCRIPTION | UNIT PRICE | UNIT | TOTAL CHARGED |
|---|---|---|---|---|---|---|
| 6 | 6 | R0 | OXYGEN, 282 CU FT | 26.500 | EA | 159.00 |
| | | R85CT | CHEMTANE 60 LB | | EA | .00 |

**NEW e-Storefront...Manage Your Account 24/7!**
Pay invoices online by credit card. Place your orders with a customized shopping list, review cylinder balances, delivery tickets and statements.
Sign up today at **www.robertsoxygen.com** click on **Manage Your Account** then **Request Account.**

For questions about this invoice
Please call: (904) 395-4215

Fed ID# 520822869, Duns# 042646877, UEI# HF9HCHM74RY5
PLEASE VISIT OUR WEBSITE AT WWW.ROBERTSOXYGEN.COM

| | | |
|---|---|---|
| | SUB TOTAL | 159.00 |
| FL | SALES TAX | 11.93 |
| | DELIVERY CHARGE | 58.00 |
| | AMOUNT DUE ----------> | 228.93 |

FL MED GAS WHLSE DIST LIC 311282 EXPIRES 10/31/25

SDS available at https://sds.robertsoxygen.com

**PLEASE REMIT TO:**
ROBERTS OXYGEN COMPANY, INC.
PO Box 5507
Rockville, MD 20855

Docusign Envelope ID: F54DB230-A150-452A-B3F0-14C4A48C193C

a 01 H 3

**ROBERTS OXYGEN COMPANY, INC.**
15830 REDLAND ROAD
PO BOX 5507
ROCKVILLE, MD 20855
(904) 395-4215

# INVOICE

| | | |
|---|---|---|
| Invoice Number | 516268 | |
| Invoice Date | 04/01/25 | |
| Invoice Amount | 692.30 | UR |
| Customer Number | 200495 | |

**SOLD TO: 200495**
J B COXWELL CONTRACTING
6741 LLOYD RD W
JACKSONVILLE, FL 32254

**SHIP TO: 2**
J B COXWELL CONTRACTING
1 RIVERSIDE AVENUE
JACKSONVILLE, FL 32202

**REMIT TO:** ROBERTS OXYGEN COMPANY, INC. PO Box 5507 Rockville, MD 20855

Please detach this portion and return with your payment.

Terms - Net on Receipt of Invoice, 1.5% monthly finance charge over 30 days, 18.0% per annum.

| CUSTOMER NO. | PURCHASE ORDER NO. | DATE DELIVERED | DELIVERY TICKET | BRANCH | SHIPPED VIA |
|---|---|---|---|---|---|
| 200495 | 2325-25 | 04/01/25 | 093143 | JACKSONVILLE | PICK-UP |

| INVOICE NO. | INVOICE DATE | ORDER PLACED BY | PLACED BY PHONE NO. |
|---|---|---|---|
| 516268 | 04/01/25 | SCOTT BRUNETTE | 386-288-7908 |

| QUANTITY SHIPPED | QUANTITY RETURNED OR BACKORDERED | PART NUMBER | DESCRIPTION | UNIT PRICE | UNIT | TOTAL CHARGED |
|---|---|---|---|---|---|---|
| 200 | | VY7018310 | VICTORY 1/8" 7018 electrode | 3.220 | LB | 644.00 |

**NEW e-Storefront...Manage Your Account 24/7!**
Pay invoices online by credit card. Place your orders with a customized shopping list, review cylinder balances, delivery tickets and statements.
Sign up today at **www.robertsoxygen.com** click on **Manage Your Account** then **Request Account.**

For questions about this invoice
Please call: (904) 395-4215

Fed ID# 520822869, Duns# 042646877, UEI# HF9HCHM74RY5
PLEASE VISIT OUR WEBSITE AT WWW.ROBERTSOXYGEN.COM

| | | |
|---|---|---|
| | SUB TOTAL | 644.00 |
| FL | SALES TAX | 48.30 |
| | DELIVERY CHARGE | .00 |
| | AMOUNT DUE ----------> | 692.30 |

FL MED GAS WHLSE DIST LIC 311282 EXPIRES 10/31/25

SDS available at https://sds.robertsoxygen.com

**PLEASE REMIT TO:**
ROBERTS OXYGEN COMPANY, INC.
PO Box 5507
Rockville, MD 20855

Docusign Envelope ID: F54DB230-A150-452A-B3F0-14C4A48C193C

# CITY OF JACKSONVILLE
# CONTRACTOR'S DAILY REPORT

**CONTRACTOR:** J.B. Coxwell Inc. **Date:** 9-18-24

Superintendent: Scott Brunette Weather:

Job Site: McCoy's Creek #2325 *Temp: A.M.* 72 * P.M. *89

Job Safety: Hard hats,vest,,glasses

| | |
|---|---|
| **Supr.** | 2 |
| **Foreman** | 2 |
| **Carpenter** | 10 |
| **Pipe layer** | |
| **Tail man** | |
| **Hillman** | |
| **Finisher** | |
| **Welder** | 3 |
| **Pile Driver** | 2 |
| **Op. Loader** | |
| ***Op.TrackHoe*** | |
| ***Survey*** | |
| ***Laborer*** | 2 |
| **OP. Crane** | 4 |
| **Rod Busters** | |

Deficiencies/Delays

Survey showed up at 9:30 finally got grade at 12:40 for section 2 right wall on outside

Comments:

Maylor maded up tie back rods for section 1

Work In Progress:

Built EFCO forms and set form on left wall in section 2

Graded dirt on right wall in section 2

Cut C-Channel for section 1 tie back rods and cut and fit whalers in section 1

Inspector Comments:

Scott Brunette

**CONTRACTOR** **INSPECTOR**

Docusign Envelope ID: F54DB230-A150-452A-B3F0-14C4A48C193C

# CITY OF JACKSONVILLE
# CONTRACTOR'S DAILY REPORT

**CONTRACTOR:** J.B. Coxwell Inc. **Date:** 9-19-24

Superintendent: Scott Brunette Weather:

Job Site: McCoy's Creek #2325 *Temp: A.M.* 72 * P.M. *77

Job Safety: Hard hats,vest,,glasses

Deficiencies/Delays

| | |
|---|---|
| **Supr.** | 2 |
| **Foreman** | 2 |
| **Carpenter** | 10 |
| **Pipe layer** | |
| **Tail man** | |
| **Hillman** | |
| **Finisher** | |
| **Welder** | 3 |
| **Pile Driver** | 2 |
| **Op. Loader** | |
| ***Op.TrackHoe*** | |
| ***Survey*** | |
| ***Laborer*** | 2 |
| **OP. Crane** | 4 |
| **Rod Busters** | |

Comments:

Maylor drilled 4 tieback rods

Work In Progress:

set forms on left wall in section 2

set rebar on right wall in section 2

Cut C-Channel for section 1 tieback rods

Inspector Comments:

Scott Brunette

**CONTRACTOR** **INSPECTOR**

Docusign Envelope ID: F54DB230-A150-452A-B3F0-14C4A48C193C

# CITY OF JACKSONVILLE
# CONTRACTOR'S DAILY REPORT

**CONTRACTOR:** J.B. Coxwell Inc. **Date:** 9-20-24

Superintendent: Scott Brunette Weather:

Job Site: McCoy's Creek #2325 *Temp: A.M.* 72 * P.M. *86

Job Safety: Hard hats,vest,,glasses

Deficiencies/Delays

| | |
|---|---|
| **Supr.** | 2 |
| **Foreman** | 2 |
| **Carpenter** | 10 |
| **Pipe layer** | |
| **Tail man** | |
| **Hillman** | |
| **Finisher** | |
| **Welder** | 3 |
| **Pile Driver** | 2 |
| **Op. Loader** | |
| ***Op.TrackHoe*** | |
| ***Survey*** | |
| ***Laborer*** | 2 |
| **OP. Crane** | 4 |
| **Rod Busters** | |

Comments:

Work In Progress:

Installed Rebar on right wall in section 2

Welded C-Channel on right wall in section 1

Maylor drilled on right wall in section 1

Inspector Comments:

Scott Brunette

**CONTRACTOR** **INSPECTOR**

Docusign Envelope ID: F54DB230-A150-452A-B3F0-14C4A48C193C

# CITY OF JACKSONVILLE
# CONTRACTOR'S DAILY REPORT

**CONTRACTOR:** J.B. Coxwell Inc. **Date:** 9-23-24

Superintendent: Scott Brunette Weather:

Job Site: McCoy's Creek #2325 *Temp: A.M.* 69 * P.M. *92

Job Safety: Hard hats,vest,,glasses

Deficiencies/Delays

| | |
|---|---|
| **Supr.** | 2 |
| **Foreman** | 2 |
| **Carpenter** | 10 |
| **Pipe layer** | |
| **Tail man** | |
| **Hillman** | |
| **Finisher** | |
| **Welder** | 3 |
| **Pile Driver** | 2 |
| **Op. Loader** | |
| ***Op.TrackHoe*** | |
| ***Survey*** | |
| ***Laborer*** | 2 |
| **OP. Crane** | 4 |
| **Rod Busters** | |

Comments:

Work In Progress:

Installed rebar on right wall in section 2

Welded C-Channel on right wall in section 1

Maylor drilled on right wall in section 1

Inspector Comments:

Scott Brunette

**CONTRACTOR** **INSPECTOR**

Docusign Envelope ID: F54DB230-A150-452A-B3F0-14C4A48C193C

# CITY OF JACKSONVILLE
# CONTRACTOR'S DAILY REPORT

**CONTRACTOR:** J.B. Coxwell Inc. **Date:** 9-24-24

Superintendent: Scott Brunette Weather:

Job Site: McCoy's Creek #2325 *Temp: A.M.* 71 * P.M. *89

Job Safety: Hard hats,vest,,glasses

Deficiencies/Delays

| | |
|---|---|
| **Supr.** | 2 |
| **Foreman** | 2 |
| **Carpenter** | 3 |
| **Pipe layer** | |
| **Tail man** | |
| **Hillman** | |
| **Finisher** | |
| **Welder** | 4 |
| **Pile Driver** | 2 |
| **Op. Loader** | |
| ***Op.TrackHoe*** | |
| ***Survey*** | |
| ***Laborer*** | 2 |
| **OP. Crane** | 4 |
| **Rod Busters** | |

Comments:

Work In Progress:

Installed rebar on right wall in section 2

Welded C-Channel on right wall in section 1 and 8" beams

Maylor drilled on right wall in section 1

Inspector Comments:

Scott Brunette

**CONTRACTOR** **INSPECTOR**

Docusign Envelope ID: F54DB230-A150-452A-B3F0-14C4A48C193C

# CITY OF JACKSONVILLE
# CONTRACTOR'S DAILY REPORT

**CONTRACTOR:** J.B. Coxwell Inc. **Date:** 9-25-24

Superintendent: Scott Brunette Weather:

Job Site: McCoy's Creek #2325 *Temp: A.M.* 71 * P.M. *87

Job Safety: Hard hats,vest,,glasses

Deficiencies/Delays

| | |
|---|---|
| **Supr.** | 2 |
| **Foreman** | 1 |
| **Carpenter** | 6 |
| **Pipe layer** | |
| **Tail man** | |
| **Hillman** | |
| **Finisher** | |
| **Welder** | 4 |
| **Pile Driver** | |
| **Op. Loader** | |
| ***Op.TrackHoe*** | |
| ***Survey*** | |
| ***Laborer*** | 2 |
| **OP. Crane** | 4 |
| **Rod Busters** | |

Comments:

Work In Progress:

Install rebar on right wall in section 2

Welded C-Channel and 8" beams in section 1on right wall

Built EFCO forms

Inspector Comments:

Scott Brunette

**CONTRACTOR** **INSPECTOR**

Docusign Envelope ID: F54DB230-A150-452A-B3F0-14C4A48C193C

# CITY OF JACKSONVILLE
# CONTRACTOR'S DAILY REPORT

**CONTRACTOR:** J.B. Coxwell Inc. **Date:** 9-26-24

Superintendent: Scott Brunette Weather:

Job Site: McCoy's Creek #2325 *Temp: A.M.* 80 * P.M. *86

Job Safety: Hard hats,vest,,glasses

Deficiencies/Delays

| | |
|---|---|
| **Supr.** | 2 |
| **Foreman** | 1 |
| **Carpenter** | 6 |
| **Pipe layer** | |
| **Tail man** | |
| **Hillman** | |
| **Finisher** | |
| **Welder** | 4 |
| **Pile Driver** | |
| **Op. Loader** | |
| ***Op.TrackHoe*** | |
| ***Survey*** | |
| ***Laborer*** | 2 |
| **OP. Crane** | 4 |
| **Rod Busters** | |

Comments:

Work In Progress:

Prepared for hurricane Helene. laid cranes boom down and tie all materials down

Inspector Comments:

Scott Brunette

**CONTRACTOR** **INSPECTOR**

Docusign Envelope ID: F54DB230-A150-452A-B3F0-14C4A48C193C

# CITY OF JACKSONVILLE
# CONTRACTOR'S DAILY REPORT

**CONTRACTOR:** J.B. Coxwell Inc. **Date:** 9-27-24

Superintendent: Scott Brunette Weather:

Job Site: McCoy's Creek #2325 *Temp: A.M.* 76 * P.M. *88

Job Safety: Hard hats,vest,,glasses

Deficiencies/Delays

| | |
|---|---|
| **Supr.** | 2 |
| **Foreman** | 1 |
| **Carpenter** | 6 |
| **Pipe layer** | |
| **Tail man** | |
| **Hillman** | |
| **Finisher** | |
| **Welder** | 4 |
| **Pile Driver** | |
| **Op. Loader** | |
| ***Op.TrackHoe*** | |
| ***Survey*** | |
| ***Laborer*** | 2 |
| **OP. Crane** | 4 |
| **Rod Busters** | |

Comments:

Work In Progress:

Welded C-Channel in section 1 on right wall

Formed left wall in section 2

Set rebar on right wall in section 2

Inspector Comments:

Scott Brunette

**CONTRACTOR** **INSPECTOR**

Docusign Envelope ID: F54DB230-A150-452A-B3F0-14C4A48C193C

# CITY OF JACKSONVILLE
# CONTRACTOR'S DAILY REPORT

**CONTRACTOR:** J.B. Coxwell Inc. **Date:** 9-30-24

Superintendent: Scott Brunette Weather:

Job Site: McCoy's Creek #2325 *Temp: A.M.* 71 * P.M. *88

Job Safety: Hard hats,vest,,glasses

Deficiencies/Delays

| | |
|---|---|
| **Supr.** | 2 |
| **Foreman** | 1 |
| **Carpenter** | 4 |
| **Pipe layer** | |
| **Tail man** | |
| **Hillman** | |
| **Finisher** | |
| **Welder** | 4 |
| **Pile Driver** | |
| **Op. Loader** | |
| ***Op.TrackHoe*** | |
| ***Survey*** | |
| ***Laborer*** | 2 |
| **OP. Crane** | 4 |
| **Rod Busters** | |

Comments:

Maylor drilled ti e backs on right wall in section 1

Work In Progress:

Installed rebar on right wall in section 2

Set forms on left wall and shot grade on forms

Welded C-Channel and 8" beams on right wall in section 1

Graded sidewalk on right wall in section 3 and formed up

Inspector Comments:

Scott Brunette

**CONTRACTOR** **INSPECTOR**

Docusign Envelope ID: F54DB230-A150-452A-B3F0-14C4A48C193C

# CITY OF JACKSONVILLE
# CONTRACTOR'S DAILY REPORT

**CONTRACTOR:** J.B. Coxwell Inc. **Date:** 10-1-24

Superintendent: Scott Brunette Weather:

Job Site: McCoy's Creek #2325 *Temp: A.M.* 72 * P.M. *85

Job Safety: Hard hats,vest,,glasses

Deficiencies/Delays

| | |
|---|---|
| **Supr.** | 2 |
| **Foreman** | 1 |
| **Carpenter** | 5 |
| **Pipe layer** | |
| **Tail man** | |
| **Hillman** | |
| **Finisher** | |
| **Welder** | 4 |
| **Pile Driver** | |
| **Op. Loader** | |
| ***Op.TrackHoe*** | |
| ***Survey*** | |
| ***Laborer*** | 2 |
| **OP. Crane** | 4 |
| **Rod Busters** | |

Comments:

Maylor drilled tie backs on right wall in section 1

Work In Progress:

Installed rebar on right walll in section 2

Formed sidewalk on right wall in section 3

Set EFCO forms on left wall in section 2

Welded C-Channel and 8" beams in section 1 on left wall

Inspector Comments:

Scott Brunette

**CONTRACTOR** **INSPECTOR**

Docusign Envelope ID: F54DB230-A150-452A-B3F0-14C4A48C193C

# CITY OF JACKSONVILLE
# CONTRACTOR'S DAILY REPORT

**CONTRACTOR:** J.B. Coxwell Inc. **Date:** 10-2-24

Superintendent: Scott Brunette Weather:

Job Site: McCoy's Creek #2325 *Temp: A.M.* 70 * P.M. *88

Job Safety: Hard hats,vest,,glasses

Deficiencies/Delays

| | |
|---|---|
| **Supr.** | 2 |
| **Foreman** | 1 |
| **Carpenter** | 6 |
| **Pipe layer** | |
| **Tail man** | |
| **Hillman** | |
| **Finisher** | |
| **Welder** | 4 |
| **Pile Driver** | 2 |
| **Op. Loader** | |
| ***Op.TrackHoe*** | |
| ***Survey*** | |
| ***Laborer*** | 2 |
| **OP. Crane** | 4 |
| **Rod Busters** | |

Comments:

Maylor drilled on left wall in section 1

Work In Progress:

Installed rebar on right wall in section 2

Formed on left wall in section 2

Formed sidewalk on right wall in section 3

Welded C-Channel and 8" beams in section 1 on left wall

Inspector Comments:

Scott Brunette

**CONTRACTOR** **INSPECTOR**

Docusign Envelope ID: F54DB230-A150-452A-B3F0-14C4A48C193C

# CITY OF JACKSONVILLE
# CONTRACTOR'S DAILY REPORT

**CONTRACTOR:** J.B. Coxwell Inc. **Date:** 10-3-24

Superintendent: Scott Brunette Weather:

Job Site: McCoy's Creek #2325 *Temp: A.M.* 70 * P.M. *88

Job Safety: Hard hats,vest,,glasses

Deficiencies/Delays

| | |
|---|---|
| **Supr.** | 2 |
| **Foreman** | 1 |
| **Carpenter** | 6 |
| **Pipe layer** | |
| **Tail man** | |
| **Hillman** | |
| **Finisher** | |
| **Welder** | 4 |
| **Pile Driver** | 2 |
| **Op. Loader** | |
| ***Op.TrackHoe*** | |
| ***Survey*** | |
| ***Laborer*** | 2 |
| **OP. Crane** | 4 |
| **Rod Busters** | |

Comments:

Work In Progress:

Poured 60' of sidewalk on right wall in section3

Adjust Rebar on left wall in section 2 at section 1. Due to survey shooting wrong grades

Worked on EFCO form liner

Welded C-Channel and 8" beams in section 1 on left wall

Inspector Comments:

Scott Brunette

**CONTRACTOR** **INSPECTOR**

Docusign Envelope ID: F54DB230-A150-452A-B3F0-14C4A48C193C

# CITY OF JACKSONVILLE
# CONTRACTOR'S DAILY REPORT

**CONTRACTOR:** J.B. Coxwell Inc. **Date:** 10-4-24

Superintendent: Scott Brunette Weather:

Job Site: McCoy's Creek #2325 *Temp: A.M.* 74 * P.M. *88

Job Safety: Hard hats,vest,,glasses

| | |
|---|---|
| **Supr.** | 2 |
| **Foreman** | 1 |
| **Carpenter** | 6 |
| **Pipe layer** | |
| **Tail man** | |
| **Hillman** | |
| **Finisher** | |
| **Welder** | 4 |
| **Pile Driver** | 2 |
| **Op. Loader** | |
| ***Op.TrackHoe*** | |
| ***Survey*** | |
| ***Laborer*** | 2 |
| **OP. Crane** | 4 |
| **Rod Busters** | |

Deficiencies/Delays

Comments:

Maylor drilled on left wall in section 1

Work In Progress:

Poured 60' of sidewalk on right wall in section 3

Welded C-Channel and 8" beams on left wall in section 1

Inspector Comments:

Scott Brunette

**CONTRACTOR** **INSPECTOR**

Docusign Envelope ID: F54DB230-A150-452A-B3F0-14C4A48C193C

# CITY OF JACKSONVILLE
# CONTRACTOR'S DAILY REPORT

**CONTRACTOR:** J.B. Coxwell Inc. **Date:** 10-7-24

Superintendent: Scott Brunette Weather:

Job Site: McCoy's Creek #2325 *Temp: A.M.* 68 * P.M. *82

Job Safety: Hard hats,vest,,glasses

Deficiencies/Delays

| | |
|---|---|
| **Supr.** | 2 |
| **Foreman** | 1 |
| **Carpenter** | 5 |
| **Pipe layer** | |
| **Tail man** | |
| **Hillman** | |
| **Finisher** | |
| **Welder** | 3 |
| **Pile Driver** | 2 |
| **Op. Loader** | |
| ***Op.TrackHoe*** | |
| ***Survey*** | |
| ***Laborer*** | 1 |
| **OP. Crane** | 4 |
| **Rod Busters** | |

Comments:

Maylor drilled on left wall in section 1

Work In Progress:

Welded C-Channel and 8" beams in section 1 on left wall

Stripped sidewalk forms on right wall in section 3

Put Form liner on EFCO forms for left wall in section 2

Inspector Comments:

Scott Brunette

**CONTRACTOR** **INSPECTOR**

Docusign Envelope ID: F54DB230-A150-452A-B3F0-14C4A48C193C

# CITY OF JACKSONVILLE
# CONTRACTOR'S DAILY REPORT

**CONTRACTOR:** J.B. Coxwell Inc. **Date:** 10-8-24

Superintendent: Scott Brunette Weather:

Job Site: McCoy's Creek #2325 *Temp: A.M.* 65 * P.M. *83

Job Safety: Hard hats,vest,,glasses

Deficiencies/Delays

| | |
|---|---|
| **Supr.** | 2 |
| **Foreman** | 1 |
| **Carpenter** | 6 |
| **Pipe layer** | |
| **Tail man** | |
| **Hillman** | |
| **Finisher** | |
| **Welder** | 3 |
| **Pile Driver** | 2 |
| **Op. Loader** | |
| ***Op.TrackHoe*** | |
| ***Survey*** | |
| ***Laborer*** | 1 |
| **OP. Crane** | 4 |
| **Rod Busters** | |

Comments:

Maylor drilled on left wall in section 1

Work In Progress:

Welded C-Channel in section 1 on left wall

Set forms on left wall in section 2

Drove sheets across channel for excavating channel at river

Inspector Comments:

Scott Brunette

**CONTRACTOR** **INSPECTOR**

Docusign Envelope ID: F54DB230-A150-452A-B3F0-14C4A48C193C

# CITY OF JACKSONVILLE
# CONTRACTOR'S DAILY REPORT

**CONTRACTOR:** J.B. Coxwell Inc. **Date:** 10-9-24

Superintendent: Scott Brunette Weather:

Job Site: McCoy's Creek #2325 *Temp: A.M.* 72 * P.M. *85

Job Safety: Hard hats,vest,,glasses

Deficiencies/Delays

Hurricane milton

| | |
|---|---|
| **Supr.** | 2 |
| **Foreman** | 1 |
| **Carpenter** | 6 |
| **Pipe layer** | |
| **Tail man** | |
| **Hillman** | |
| **Finisher** | |
| **Welder** | 3 |
| **Pile Driver** | 2 |
| **Op. Loader** | |
| ***Op.TrackHoe*** | |
| ***Survey*** | |
| ***Laborer*** | 1 |
| **OP. Crane** | 4 |
| **Rod Busters** | |

Comments:

Work In Progress:

Prepared for Hurricane milton

Inspector Comments:

Scott Brunette

**CONTRACTOR** **INSPECTOR**

Docusign Envelope ID: F54DB230-A150-452A-B3F0-14C4A48C193C

# CITY OF JACKSONVILLE
# CONTRACTOR'S DAILY REPORT

**CONTRACTOR:** J.B. Coxwell Inc. **Date:** 10-11-24

Superintendent: Scott Brunette Weather:

Job Site: McCoy's Creek #2325 *Temp: A.M.* 59 * P.M. *77

Job Safety: Hard hats,vest,,glasses

Deficiencies/Delays

| | |
|---|---|
| **Supr.** | 2 |
| **Foreman** | 1 |
| **Carpenter** | 6 |
| **Pipe layer** | |
| **Tail man** | |
| **Hillman** | |
| **Finisher** | |
| **Welder** | 3 |
| **Pile Driver** | 2 |
| **Op. Loader** | |
| ***Op.TrackHoe*** | |
| ***Survey*** | |
| ***Laborer*** | 1 |
| **OP. Crane** | 4 |
| **Rod Busters** | |

Comments:

Infinty tied rebar for caps in section 2&3

Work In Progress:

Welded C-Channel in section 1 on left wall

Installed sheets across channel for excavating at river

Formed left wall in section 2

Inspector Comments:

Scott Brunette

**CONTRACTOR** **INSPECTOR**

Docusign Envelope ID: F54DB230-A150-452A-B3F0-14C4A48C193C

# CITY OF JACKSONVILLE
# CONTRACTOR'S DAILY REPORT

**CONTRACTOR:** J.B. Coxwell Inc. **Date:** 10-12-24

Superintendent: Scott Brunette Weather:

Job Site: McCoy's Creek #2325 *Temp: A.M.* 72 * P.M. *85

Job Safety: Hard hats,vest,,glasses

Deficiencies/Delays

| | |
|---|---|
| **Supr.** | 2 |
| **Foreman** | 1 |
| **Carpenter** | 5 |
| **Pipe layer** | |
| **Tail man** | |
| **Hillman** | |
| **Finisher** | |
| **Welder** | 3 |
| **Pile Driver** | 2 |
| **Op. Loader** | |
| ***Op.TrackHoe*** | |
| ***Survey*** | |
| ***Laborer*** | 1 |
| **OP. Crane** | 4 |
| **Rod Busters** | |

Comments:

Infinty tied rebar on right wall in section 2

Work In Progress:

Welded C-Channel on left wall in section 1

Drove sheets across channel for Excavating at river

Formed left wall in section 2

Inspector Comments:

Scott Brunette

**CONTRACTOR** **INSPECTOR**

Docusign Envelope ID: F54DB230-A150-452A-B3F0-14C4A48C193C

# CITY OF JACKSONVILLE
# CONTRACTOR'S DAILY REPORT

**CONTRACTOR:** J.B. Coxwell Inc. **Date:** 10-14-24

Superintendent: Scott Brunette Weather:

Job Site: McCoy's Creek #2325 *Temp: A.M.* 58 * P.M. *87

Job Safety: Hard hats,vest,,glasses

Deficiencies/Delays

| | |
|---|---|
| **Supr.** | 2 |
| **Foreman** | |
| **Carpenter** | 6 |
| **Pipe layer** | |
| **Tail man** | |
| **Hillman** | |
| **Finisher** | |
| **Welder** | 4 |
| **Pile Driver** | 2 |
| **Op. Loader** | |
| ***Op.TrackHoe*** | |
| ***Survey*** | |
| ***Laborer*** | 2 |
| **OP. Crane** | 4 |
| **Rod Busters** | |

Comments:

Maylor drilled on left wall in section 1

Work In Progress:

Welded C-Channel and 8" beams on left wall in section 1

Drove sheeets across channel for exavating at river

Formed cap on left wall in section 2

Inspector Comments:

Scott Brunette

**CONTRACTOR** **INSPECTOR**

Docusign Envelope ID: F54DB230-A150-452A-B3F0-14C4A48C193C

# CITY OF JACKSONVILLE
# CONTRACTOR'S DAILY REPORT

**CONTRACTOR:** J.B. Coxwell Inc. **Date:** 10-15-24

Superintendent: Scott Brunette Weather:

Job Site: McCoy's Creek #2325 *Temp: A.M.* 59 * P.M. *80

Job Safety: Hard hats,vest,,glasses

Deficiencies/Delays

| | |
|---|---|
| **Supr.** | 2 |
| **Foreman** | 1 |
| **Carpenter** | 6 |
| **Pipe layer** | |
| **Tail man** | |
| **Hillman** | |
| **Finisher** | |
| **Welder** | 4 |
| **Pile Driver** | 2 |
| **Op. Loader** | |
| ***Op.TrackHoe*** | |
| ***Survey*** | |
| ***Laborer*** | 2 |
| **OP. Crane** | 4 |
| **Rod Busters** | |

Comments:

Maylor drilled on left wall in section 1

Work In Progress:

Welded C-Channel and 8" beams on left wall in section 1

Formed left wall in section 2

Drove sheets across channel for exavating at river finished that and moved to section 4

Set up in section 4 with template and installed 1 pair of sheets on left wall

Inspector Comments:

Scott Brunette

**CONTRACTOR** **INSPECTOR**

Docusign Envelope ID: F54DB230-A150-452A-B3F0-14C4A48C193C

# CITY OF JACKSONVILLE
# CONTRACTOR'S DAILY REPORT

**CONTRACTOR:** J.B. Coxwell Inc. **Date:** 10-18-24

Superintendent: Scott Brunette Weather:

Job Site: McCoy's Creek #2325 *Temp: A.M.* 51 * P.M. *73

Job Safety: Hard hats,vest,,glasses

Deficiencies/Delays

| | |
|---|---|
| **Supr.** | 2 |
| **Foreman** | 1 |
| **Carpenter** | 6 |
| **Pipe layer** | |
| **Tail man** | |
| **Hillman** | |
| **Finisher** | |
| **Welder** | 4 |
| **Pile Driver** | 2 |
| **Op. Loader** | |
| ***Op.TrackHoe*** | |
| ***Survey*** | |
| ***Laborer*** | 2 |
| **OP. Crane** | 4 |
| **Rod Busters** | |

Comments:

Maylor finished drillin gin section 1 and cleaned up

Work In Progress:

Welded C-Channel and 8" beams in section 1 on left wall

Installed tie back wall sheets on left wall in section 4

Formed left wall in section 2

Inspector Comments:

Scott Brunette

**CONTRACTOR** **INSPECTOR**

Docusign Envelope ID: F54DB230-A150-452A-B3F0-14C4A48C193C

# CITY OF JACKSONVILLE
# CONTRACTOR'S DAILY REPORT

**CONTRACTOR:** J.B. Coxwell Inc. **Date:** 10-19-24

Superintendent: Scott Brunette Weather:

Job Site: McCoy's Creek #2325 *Temp: A.M.* 59 * P.M. *76

Job Safety: Hard hats,vest,,glasses

Deficiencies/Delays

| | |
|---|---|
| **Supr.** | 2 |
| **Foreman** | 1 |
| **Carpenter** | 5 |
| **Pipe layer** | |
| **Tail man** | |
| **Hillman** | |
| **Finisher** | |
| **Welder** | 4 |
| **Pile Driver** | 2 |
| **Op. Loader** | |
| ***Op.TrackHoe*** | |
| ***Survey*** | |
| ***Laborer*** | 2 |
| **OP. Crane** | 4 |
| **Rod Busters** | |

Comments:

Work In Progress:

Welded C-Channel and 8" beams in section 1 left wall

Formed left wall cap in section 2

Drove sheets in section 4 on right wall

Inspector Comments:

Scott Brunette

**CONTRACTOR** **INSPECTOR**

Docusign Envelope ID: F54DB230-A150-452A-B3F0-14C4A48C193C

# CITY OF JACKSONVILLE
# CONTRACTOR'S DAILY REPORT

**CONTRACTOR:** J.B. Coxwell Inc. **Date:** 10-21-24

Superintendent: Scott Brunette Weather:

Job Site: McCoy's Creek #2325 *Temp: A.M.* 73 * P.M. *82

Job Safety: Hard hats,vest,,glasses

Deficiencies/Delays

| | |
|---|---|
| **Supr.** | 2 |
| **Foreman** | 2 |
| **Carpenter** | 12 |
| **Pipe layer** | |
| **Tail man** | |
| **Hillman** | |
| **Finisher** | |
| **Welder** | 4 |
| **Pile Driver** | 2 |
| **Op. Loader** | |
| ***Op.TrackHoe*** | |
| ***Survey*** | |
| ***Laborer*** | 2 |
| **OP. Crane** | 4 |
| **Rod Busters** | |

Comments:

Work In Progress:

Welded 8" Beams on left wall in section 2

Installed sheets in section 4 on right wall

Formed left wall in section 2

Inspector Comments:

Scott Brunette

**CONTRACTOR** **INSPECTOR**

Docusign Envelope ID: F54DB230-A150-452A-B3F0-14C4A48C193C

# CITY OF JACKSONVILLE
# CONTRACTOR'S DAILY REPORT

**CONTRACTOR:** J.B. Coxwell Inc. **Date:** 10-22-24

Superintendent: Scott Brunette Weather:

Job Site: McCoy's Creek #2325 *Temp: A.M.* 68 * P.M. *82

Job Safety: Hard hats,vest,,glasses

Deficiencies/Delays

| | |
|---|---|
| **Supr.** | 2 |
| **Foreman** | 2 |
| **Carpenter** | 12 |
| **Pipe layer** | |
| **Tail man** | |
| **Hillman** | |
| **Finisher** | |
| **Welder** | 4 |
| **Pile Driver** | 2 |
| **Op. Loader** | |
| ***Op.TrackHoe*** | |
| ***Survey*** | |
| ***Laborer*** | 2 |
| **OP. Crane** | 4 |
| **Rod Busters** | |

Comments:

Maylor tested soil anchors in section 1

Work In Progress:

Poured left outside wall in section 2 sta. 105+7.58 to 105+96 80 yards

Poured Planters 4 yards

Welded 8" Beams on left wall in section 1

Installed sheets in section 4 on right wall

Inspector Comments:

Scott Brunette

**CONTRACTOR** **INSPECTOR**

Docusign Envelope ID: F54DB230-A150-452A-B3F0-14C4A48C193C

# CITY OF JACKSONVILLE
# CONTRACTOR'S DAILY REPORT

**CONTRACTOR:** J.B. Coxwell Inc. **Date:** 10-23-24

Superintendent: Scott Brunette Weather:

Job Site: McCoy's Creek #2325 *Temp: A.M.* 63* P.M. *83

Job Safety: Hard hats,vest,,glasses

Deficiencies/Delays

| | |
|---|---|
| **Supr.** | 2 |
| **Foreman** | 2 |
| **Carpenter** | 12 |
| **Pipe layer** | |
| **Tail man** | |
| **Hillman** | |
| **Finisher** | |
| **Welder** | 3 |
| **Pile Driver** | 2 |
| **Op. Loader** | |
| ***Op.TrackHoe*** | |
| ***Survey*** | |
| ***Laborer*** | 2 |
| **OP. Crane** | 4 |
| **Rod Busters** | |

Comments: Had a conversation with the crew about cell phones and ear buds being used on the job durning work hours as a result if theyare caught using them they will be sent home for the day. if it happens after that they will be written up and 3 days off

Work In Progress:

Welded 8" beams in section 1 on left wall

Drove sheeets in section 4 on right wall

Drove sheeets for tie back rods in section 4 left wall to grade

Stripped planter forms and rubbed the sides

Graded dirt in section 1 for cap

Inspector Comments:

Scott Brunette

**CONTRACTOR** **INSPECTOR**

Docusign Envelope ID: F54DB230-A150-452A-B3F0-14C4A48C193C

# CITY OF JACKSONVILLE
# CONTRACTOR'S DAILY REPORT

**CONTRACTOR:** J.B. Coxwell Inc. **Date:** 10-24-24

Superintendent: Scott Brunette Weather:

Job Site: McCoy's Creek #2325 *Temp: A.M.* 56 * P.M. *86

Job Safety: Hard hats,vest,,glasses

Deficiencies/Delays

| | |
|---|---|
| **Supr.** | 2 |
| **Foreman** | 2 |
| **Carpenter** | 12 |
| **Pipe layer** | |
| **Tail man** | |
| **Hillman** | |
| **Finisher** | |
| **Welder** | 3 |
| **Pile Driver** | 2 |
| **Op. Loader** | |
| ***Op.TrackHoe*** | |
| ***Survey*** | |
| ***Laborer*** | 2 |
| **OP. Crane** | 4 |
| **Rod Busters** | |

Comments:

Maylor pulled tested soil anchors. had 1 fail and will have to redrill hole

Work In Progress:

welded 8" beams on left wall in section 1

Formed cap in section 1 on right wall

Installed sheets in section 1 on right wall and drove to grade

Inspector Comments:

Scott Brunette

**CONTRACTOR** **INSPECTOR**

Docusign Envelope ID: F54DB230-A150-452A-B3F0-14C4A48C193C

# CITY OF JACKSONVILLE
# CONTRACTOR'S DAILY REPORT

**CONTRACTOR:** J.B. Coxwell Inc. **Date:** 10-25-26

Superintendent: Scott Brunette Weather:

Job Site: McCoy's Creek #2325 *Temp: A.M.* 60* P.M. *87

Job Safety: Hard hats,vest,,glasses

Deficiencies/Delays

| | |
|---|---|
| **Supr.** | 2 |
| **Foreman** | 2 |
| **Carpenter** | 12 |
| **Pipe layer** | |
| **Tail man** | |
| **Hillman** | |
| **Finisher** | |
| **Welder** | 3 |
| **Pile Driver** | 2 |
| **Op. Loader** | |
| ***Op.TrackHoe*** | |
| ***Survey*** | |
| ***Laborer*** | 2 |
| **OP. Crane** | 4 |
| **Rod Busters** | |

Comments:

Work In Progress:

Formed section 1 cap on right wall

Installed sheets for tie back wall in section 4 on right wall hit obstructions.Dug down and found a concrete footer, an 8" pipe, and a fiber line

Welded 8" beams and C-Channel on Right Wall

Inspector Comments:

Scott Brunette

**CONTRACTOR** **INSPECTOR**

Docusign Envelope ID: F54DB230-A150-452A-B3F0-14C4A48C193C

# CITY OF JACKSONVILLE
# CONTRACTOR'S DAILY REPORT

**CONTRACTOR:** J.B. Coxwell Inc. **Date:** 10-26-24

Superintendent: Scott Brunette Weather:

Job Site: McCoy's Creek #2325 *Temp:* A.M. 60 * P.M. *86

Job Safety: Hard hats,vest,,glasses

Deficiencies/Delays

| | |
|---|---|
| **Supr.** | 1 |
| **Foreman** | 2 |
| **Carpenter** | 12 |
| **Pipe layer** | |
| **Tail man** | |
| **Hillman** | |
| **Finisher** | |
| **Welder** | 3 |
| **Pile Driver** | 2 |
| **Op. Loader** | |
| ***Op.TrackHoe*** | |
| ***Survey*** | |
| ***Laborer*** | 2 |
| **OP. Crane** | 4 |
| **Rod Busters** | |

Comments:

Talked to survey(Bryan) on friday afternoon because he was suppposed to come on friday didnt show up he was at other jobs. he told me firday he would come out saturday and didnt show up then either

Work In Progress:

Stripped section left wall forms

Formed cap in section 1 on right wall

Built template for trestle

Welded 8" beams and C-Channel on Right Wall

Inspector Comments:

Scott Brunette

**CONTRACTOR** **INSPECTOR**

Docusign Envelope ID: F54DB230-A150-452A-B3F0-14C4A48C193C

# CITY OF JACKSONVILLE
# CONTRACTOR'S DAILY REPORT

**CONTRACTOR:** J.B. Coxwell Inc. **Date:** 3-20-25

Superintendent: Scott Brunette Weather:

Job Site: McCoy's Creek #2325 *Temp: A.M.* 50 * P.M. * 77

Job Safety: Hard hats,vest,,glasses

| | |
|---|---|
| **Supr.** | 1 |
| **Foreman** | 1 |
| **Carpenter** | 12 |
| **Finisher** | |
| | |
| **Welder** | 2 |
| **Pile Driver** | 1 |
| ***Laborer*** | |
| **OP. Crane** | 3 |
| ***Survey*** | |
| **Rod Busters** | |

Deficiencies/Delays

Comments:

Work In Progress:

Form stairs in section 2

Poured stairs in section 3 on right wall

Poured 3 sets of planter boxes

Poured sidewalk back in section 2 on right wall at end of stairs

Install c-channel and 8" whalers

Inspector Comments:

Scott Brunette

**CONTRACTOR** **INSPECTOR**

Docusign Envelope ID: F54DB230-A150-452A-B3F0-14C4A48C193C

# CITY OF JACKSONVILLE
# CONTRACTOR'S DAILY REPORT

**CONTRACTOR:** J.B. Coxwell Inc. **Date:** 3-21-25

Superintendent: Scott Brunette Weather:

Job Site: McCoy's Creek #2325 *Temp: A.M.* 44 * P.M. *66

Job Safety: Hard hats,vest,,glasses

| | |
|---|---|
| **Supr.** | 1 |
| **Foreman** | 1 |
| **Carpenter** | 12 |
| **Finisher** | |
| **Welder** | 2 |
| **Pile Driver** | 1 |
| ***Laborer*** | |
| **OP. Crane** | 3 |
| ***Survey*** | |
| **Rod Busters** | |

Deficiencies/Delays

Comments:

Work In Progress:

Formed stairs in section 2 on left wall

Welded C-Channel in section 1 on right wall

Inspector Comments:

Scott Brunette

**CONTRACTOR** **INSPECTOR**

Docusign Envelope ID: F54DB230-A150-452A-B3F0-14C4A48C193C

# CITY OF JACKSONVILLE
# CONTRACTOR'S DAILY REPORT

**CONTRACTOR:** J.B. Coxwell Inc. **Date:** 3-24-25

Superintendent: Scott Brunette Weather:

Job Site: McCoy's Creek #2325 *Temp: A.M.* 55* P.M. *78

Job Safety: Hard hats,vest,,glasses

| | |
|---|---|
| **Supr.** | 1 |
| **Foreman** | 1 |
| **Carpenter** | 12 |
| **Finisher** | |
| **Welder** | 2 |
| **Pile Driver** | 1 |
| ***Laborer*** | |
| **OP. Crane** | 3 |
| ***Survey*** | |
| **Rod Busters** | |

Deficiencies/Delays

Comments:

Work In Progress:

Formed stairs on left and right walls in section 2

Welde C-Channel in section 1 on right wall

Inspector Comments:

Scott Brunette

**CONTRACTOR** **INSPECTOR**

Docusign Envelope ID: F54DB230-A150-452A-B3F0-14C4A48C193C

# CITY OF JACKSONVILLE
# CONTRACTOR'S DAILY REPORT

**CONTRACTOR:** J.B. Coxwell Inc. **Date:** 3-25-25

Superintendent: Scott Brunette Weather:

Job Site: McCoy's Creek #2325 *Temp.* A.M. 61 * P.M. *79

Job Safety: Hard hats,vest,,glasses

| | |
|---|---|
| **Supr.** | 1 |
| **Foreman** | 1 |
| **Carpenter** | 12 |
| **Finisher** | |
| | |
| **Welder** | 2 |
| **Pile Driver** | 1 |
| ***Laborer*** | |
| **OP. Crane** | 3 |
| ***Survey*** | |
| **Rod Busters** | |

Deficiencies/Delays

Comments:

Work In Progress:

Formed stair walls in section 2

Installed C-Channel &8" beams in section 1 on right wall

Inspector Comments:

Scott Brunette

**CONTRACTOR** **INSPECTOR**

Docusign Envelope ID: F54DB230-A150-452A-B3F0-14C4A48C193C

# CITY OF JACKSONVILLE
# CONTRACTOR'S DAILY REPORT

**CONTRACTOR:** J.B. Coxwell Inc. **Date:** 3-26-25

Superintendent: Scott Brunette Weather:

Job Site: McCoy's Creek #2325 *Temp: A.M.* 55 * P.M. *83

Job Safety: Hard hats,vest,,glasses

| | |
|---|---|
| **Supr.** | 1 |
| **Foreman** | 1 |
| **Carpenter** | 13 |
| **Finisher** | |
| **Welder** | 2 |
| **Pile Driver** | 1 |
| ***Laborer*** | |
| **OP. Crane** | 3 |
| ***Survey*** | |
| **Rod Busters** | |

Deficiencies/Delays

Comments:

Work In Progress:

Formed stair walls in section 2

Installed C-Channel & 8" beams in section 1on left wall

Maylor drilled in section 1 on left wall

Inspector Comments:

Scott Brunette

**CONTRACTOR** **INSPECTOR**

Docusign Envelope ID: F54DB230-A150-452A-B3F0-14C4A48C193C

# CITY OF JACKSONVILLE
# CONTRACTOR'S DAILY REPORT

**CONTRACTOR:** J.B. Coxwell Inc. **Date:** 3-27-25

Superintendent: Scott Brunette Weather:

Job Site: McCoy's Creek #2325 *Temp: A.M.* 50 * P.M. *75

Job Safety: Hard hats,vest,,glasses

| | |
|---|---|
| **Supr.** | 1 |
| **Foreman** | 1 |
| **Carpenter** | 12 |
| **Finisher** | |
| | |
| **Welder** | 2 |
| **Pile Driver** | 1 |
| ***Laborer*** | |
| **OP. Crane** | 3 |
| ***Survey*** | |
| **Rod Busters** | |

Deficiencies/Delays

Comments:

Work In Progress:

Formed stair walls in section 2

Installed C-Channel on left wall in section 1

Maylor Drilled in section 1 on left wall

Inspector Comments:

Scott Brunette

**CONTRACTOR** **INSPECTOR**

Docusign Envelope ID: F54DB230-A150-452A-B3F0-14C4A48C193C

# CITY OF JACKSONVILLE
# CONTRACTOR'S DAILY REPORT

**CONTRACTOR:** J.B. Coxwell Inc. **Date:** 3-28-25

Superintendent: Scott Brunette Weather:

Job Site: McCoy's Creek #2325 *Temp.* A.M. 52 * P.M. *80

Job Safety: Hard hats,vest,,glasses

| | |
|---|---|
| **Supr.** | 1 |
| **Foreman** | 1 |
| **Carpenter** | 12 |
| **Finisher** | |
| | |
| **Welder** | 2 |
| **Pile Driver** | 1 |
| ***Laborer*** | |
| **OP. Crane** | 3 |
| ***Survey*** | |
| **Rod Busters** | |

Deficiencies/Delays

Comments:

Work In Progress:

Poured stair walls in section 2

Installed C-Channel and 8" beams on left wall in section 1

Maylor drilled in section 4 and finished

Inspector Comments:

Scott Brunette

**CONTRACTOR** **INSPECTOR**

Docusign Envelope ID: F54DB230-A150-452A-B3F0-14C4A48C193C

# CITY OF JACKSONVILLE
# CONTRACTOR'S DAILY REPORT

**CONTRACTOR:** J.B. Coxwell Inc. **Date:** 3-31-25

Superintendent: Scott Brunette Weather:

Job Site: McCoy's Creek #2325 *Temp: A.M.* 63 * P.M. *86

Job Safety: Hard hats,vest,,glasses

| | |
|---|---|
| **Supr.** | 1 |
| **Foreman** | 1 |
| **Carpenter** | 12 |
| **Finisher** | |
| | |
| **Welder** | 2 |
| **Pile Driver** | 1 |
| ***Laborer*** | 1 |
| **OP. Crane** | 3 |
| ***Survey*** | |
| **Rod Busters** | |

Deficiencies/Delays

Comments:

Work In Progress:

Stripped stair walls and point &patched

Started forming section 1 upper walls

Installed C-Channel & 8" beams in section 1

Inspector Comments:

Scott Brunette

**CONTRACTOR** **INSPECTOR**

Docusign Envelope ID: F54DB230-A150-452A-B3F0-14C4A48C193C

# CITY OF JACKSONVILLE
# CONTRACTOR'S DAILY REPORT

**CONTRACTOR:** J.B. Coxwell Inc. **Date:** 4-1-25

Superintendent: Scott Brunette Weather:

Job Site: McCoy's Creek #2325 *Temp: A.M.* 65* P.M. * 88

Job Safety: Hard hats,vest,,glasses

| | |
|---|---|
| **Supr.** | 1 |
| **Foreman** | 1 |
| **Carpenter** | 12 |
| **Finisher** | |
| | |
| **Welder** | 2 |
| **Pile Driver** | 1 |
| ***Laborer*** | |
| **OP. Crane** | 3 |
| ***Survey*** | |
| **Rod Busters** | |

Deficiencies/Delays

Comments:

Work In Progress:

Formed Upper walls in section 1

Installed C-Channel & 8" beams in section 4 Temp wall B

Inspector Comments:

Scott Brunette

**CONTRACTOR** **INSPECTOR**

Docusign Envelope ID: F54DB230-A150-452A-B3F0-14C4A48C193C

# CHANGE ORDER REQUEST #25

# WEATHERED STEEL BRIDGES CREDIT

# MCCOY'S CREEK OUTFALL REALIGNMENT

# COJ CONTRACT NO.: 70646-23

# NOVEMBER 14, 2024

Docusign Envelope ID: F54DB230-A150-452A-B3F0-14C4A48C193C

# GAI ENTITLEMENT ANALYSIS

# CHANGE ORDER REQUEST #25

# WEATHERED STEEL BRIDGES CREDIT

# MCCOY'S CREEK OUTFALL REALIGNMENT

# NOVEMBER 14, 2025

Docusign Envelope ID: F54DB230-A150-452A-B3F0-14C4A48C193C

# Entitlement Analysis COR #25 PreFab Weathered Steel Truss Bridges (DEDUCT)

Job Description: McCoy's Creek Outfall Realignment
COJ Contract Number: 70646-23
November 14, 2025

The design for Section 1 originally required the furnishing and installation of seven (7) weathered steel bridges. During subsequent design revisions, the Engineer reduced this requirement to three (3) weathered steel bridges**,** effectively eliminating four (4) units from the scope of work.

The original contract unit price for each weathered steel bridge was $149,600.00. Based on the reduction of four units, the resulting deductive cost change is calculated as follows:

- **Original Unit Price:** $149,600.00 per bridge
- **Deleted Quantity:** 4 bridges
- **Total Credit:** 4 × $149,600.00 = **$598,400.00**

Therefore, the design revision eliminating four weathered steel bridges results in a deductive change order credit of $598,400.00 to the City.

This change is directly attributable to the Engineer's modification of the design and represents a reduction in the Contractor's contractual scope of work. As such, the Contractor's entitlement is limited to adjusting the contract value to reflect the removed quantities in accordance with the Contract's unit price provisions.

Docusign Envelope ID: F54DB230-A150-452A-B3F0-14C4A48C193C

# CONTRACTOR'S DOCUMENTATION

# CHANGE ORDER REQUEST #25

# WEATHERED STEEL BRIDGES CREDIT

# MCCOY'S CREEK OUTFALL REALIGNMENT

# NOVEMBER 14, 2025

Docusign Envelope ID: F54DB230-A150-452A-B3F0-14C4A48C193C

**J.B. Coxwell Contracting, Inc.**
6741 Lloyd Road West
Jacksonville, Florida 32254
Office (904) 786-1120 Fax (904) 783-2970

October 24, 2025

McCoy's Creek Channel Improvements

Quantity Reduction of Prefabricated
Weathered Steel Bridges

Carl Padgett
GAI Consultants
12574 Flagler Center Blvd
Suite 202
Jacksonville, FL 32258

Project Name: McCoy's Creek Channel Improvements
County: Duval
COJ Contract #: 70646-23
Re: RFCO # 25
Quantity Reduction of Prefabricated
Weathered Steel Bridges

Dear Mr. Padgett:

As you are aware, the design within Section 1 was changed from an initial quantity of seven (7ea) weathered steel bridges to three (3ea). By eliminating four (4ea) of the weathered steel bridges, this equates to a savings in the amount of ($598,400.00).

Original Unit Price per ea = $149,600.00
Weathered Steel Bridges 4 ea x $149,600.00= $598,400.00

If you have any questions, please do not hesitate to contact me.

Respectfully,

**J. B. COXWELL CONTRACTING, INC.**

Garrett Harrison
Director of Structures

Docusign Envelope ID: F54DB230-A150-452A-B3F0-14C4A48C193C

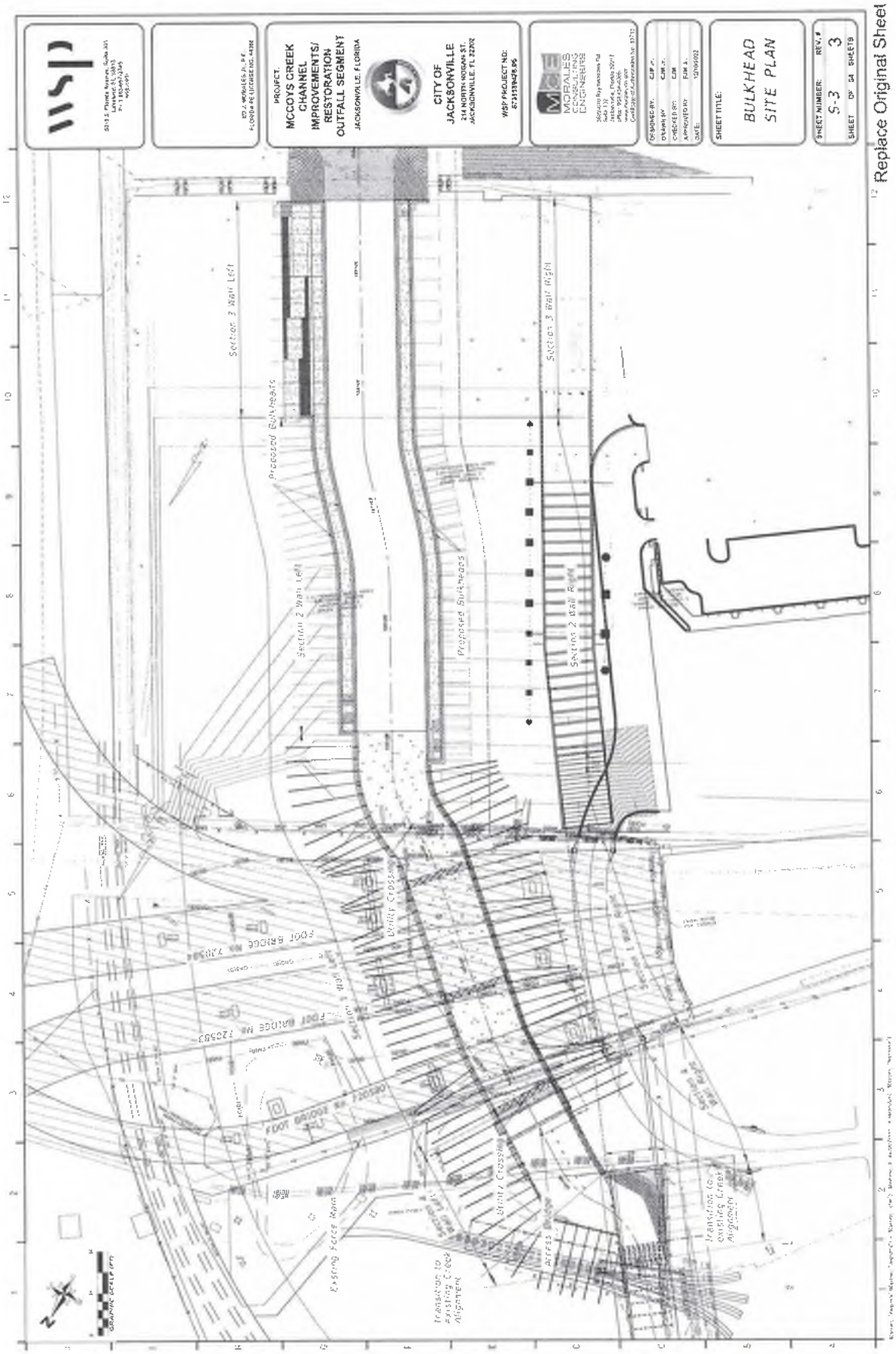


Replace Original Sheet

Docusign Envelope ID: F54DB230-A150-452A-B3F0-14C4A48C193C



| C/L CURVE TABLE | | | | | |
|---|---|---|---|---|---|
| CURVE | RADIUS | LENGTH | CHORD | CHORD BEARING | DELTA |
| C1 | 70.00 | 69.15 | 66.37 | S65°43'32"E | 56°36'08" |
| C2 | 63.00 | 41.09 | 40.36 | S75°20'31"E | 37°22'07" |
| C3 | 128.00 | 20.53 | 20.51 | S52°03'44"E | 9°11'28" |
| C4 | 60.00 | 22.23 | 22.10 | S58°04'44"E | 21°13'23" |
| C5 | 99.25 | 67.79 | 66.48 | S49°07'30"E | 39°07'53" |
| C6 | 242.00 | 52.23 | 52.13 | S35°44'32"E | 12°21'56" |
| C7 | 158.00 | 34.10 | 34.03 | S35°44'32"E | 12°21'56" |

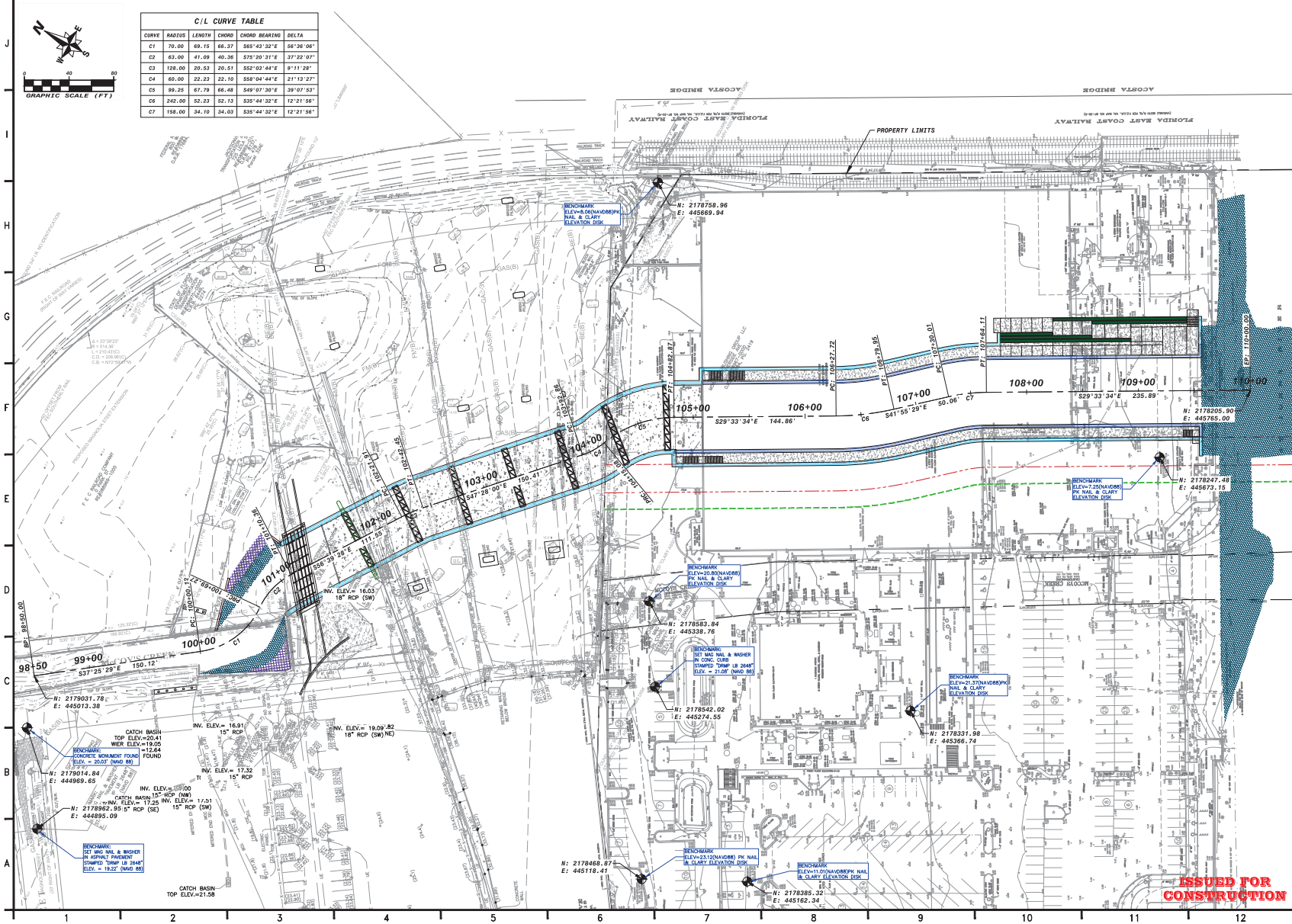


C:\civil 3d home 2020 projects\6735189451 mccoys creek - phase 1 and 2\dwg\mccoys stream outfall - 12-19-22\PHASE 2\McCoy PH 2A Stream CONTROL.dwg - C-4 PROJECT CONTROL 11/02/2023 3:53pm USAP718297

wsp
5015 S. Florida Avenue, Suite 301
Lakeland, FL 33813
P+ 1 863-667-2345
wsp.com

DAVID W BUTCHER, P.E.
FLORIDA PE LICENSE NO. 55431

PROJECT:
**MCCOYS CREEK CHANNEL IMPROVEMENTS/ RESTORATION OUTFALL SEGMENT**
JACKSONVILLE, FLORIDA

**CITY OF JACKSONVILLE**
214 NORTH HOGAN ST.
JACKSONVILLE, FL 32202

WSP PROJECT NO:
6735189428.06

REVISIONS

| NO. | DATE | BY | APPROVED |
|---|---|---|---|
| | | | |

| | |
|---|---|
| DESIGNED BY: | DWB |
| DRAWN BY: | TAM |
| CHECKED BY: | DWB |
| APPROVED BY: | DWB |
| DATE: | 11/2/23 |

SHEET TITLE:
PROJECT CONTROL

| SHEET NUMBER: | REV. # |
|---|---|
| C-4 | -- |

SHEET C-4 OF 20 SHEETS

Docusign Envelope ID: F54DB230-A150-452A-B3F0-14C4A48C193C

# CHANGE ORDER REQUEST #26

# WEATHERED STEEL TRUSS BRIDGES DEDUCTION

# MCCOY'S CREEK OUTFALL REALIGNMENT

# COJ CONTRACT NO.: 70646-23

# NOVEMBER 15, 2025

Docusign Envelope ID: F54DB230-A150-452A-B3F0-14C4A48C193C

# GAI ENTITLEMENT ANALYSIS

# CHANGE ORDER REQUEST #26

# WEATHERED STEEL TRUSS BRIDGES

# MCCOY'S CREEK OUTFALL REALIGNMENT

# NOVEMBER 15, 2025

Docusign Envelope ID: F54DB230-A150-452A-B3F0-14C4A48C193C

# Entitlement Analysis COR #26 – Additional Materials & Engineering For Weathered Truss Bridges (Section 1)

Job Description: McCoy's Creek Outfall Realignment
COJ Contract Number: 70646-23
November 15, 2025

As a result of the approved design change within Section 1, the prefabricated weathered steel struts required a complete redesign to conform to the revised structural configuration. At the time the design change was issued, the Contractor had already procured the required materials and had partially fabricated components consistent with the original, Engineer-issued design. The redesign issued by the Engineer rendered a portion of the previously procured and fabricated materials incompatible with the modified design. Consequently, the Contractor was required to perform additional engineering, redesign, and fabrication services beyond the original contractual scope to meet the revised structural requirements.
These additional efforts were not contemplated within the original bid and are directly attributable to the Engineer-initiated design modification. The associated extra cost required to accommodate the redesigned totals:

Additional Design and Engineering Services: Included

Additional Fabrication and Modifications: Included

Total Cost Impact: $289,573.45

Accordingly, the Contractor is entitled to full reimbursement of the additional costs incurred to implement the revised strut design. These costs represent compensable impacts resulting from a directed design change and are recoverable under the Contract's provisions governing compensation is in accordance with Division 3 COJ General Conditions Section 20.34.

**Summary of Cost Impacts**

| Item Description | Quantity Change | Unit Price | Cost Impact |
|---|---|---|---|
| Weathered Steel Bridges (Deductive Change) | Reduction of 4 bridges from original design | $149,600.00 Each | (598,400.00) |
| Weathered Steel Strut Redesign (Section 1) | Additional engineering, redesign, and fabrication required due to approved design change | Lump Sum | $289,573.45 |

Docusign Envelope ID: F54DB230-A150-452A-B3F0-14C4A48C193C

| | | | |
|---|---|---|---|
| Total Net Cost Impact | | | ($308,826.55) |

**Summary**

The net cost impact results from two separate but related modifications within Section 1. The reduction of four weathered steel bridges produces a deductive credit to COJ in the amount of $598,400.00. Conversely, the Engineer-directed redesign of the prefabricated weathered steel struts required additional engineering, redesign, and fabrication efforts beyond the original scope, resulting in additional compensable costs totaling $289,573.45.

When combined, these adjustments yield a net deductive impact of $308,826.55 to the Contract. This total reflects the appropriate reconciliation of both the deleted work and the compensable redesign costs necessary to comply with the revised Section 1 design.

Docusign Envelope ID: F54DB230-A150-452A-B3F0-14C4A48C193C

# CONTRACTOR'S DOCUMENTATION

# CHANGE ORDER REQUEST #26

# WEATHERED STEEL TRUSS BRIDGES

# MCCOY'S CREEK OUTFALL REALIGNMENT

# NOVEMBER 15, 2025

Docusign Envelope ID: F54DB230-A150-452A-B3F0-14C4A48C193C

**J.B. Coxwell Contracting, Inc.**
6741 Lloyd Road West
Jacksonville, Florida 32254
Office (904) 786-1120 Fax (904) 783-2970

October 24, 2025

McCoy's Creek Channel Improvements

Acquisition of additional materials and Design
for Prefabricated Weathered Steel Bridges

Carl Padgett
GAI Consultants
12574 Flagler Center Blvd
Suite 202
Jacksonville, FL 32258

Project Name: McCoy's Creek Channel Improvements
County: Duval
COJ Contract #: 70646-23
Re: RFCO #26
Acquisition of additional materials and design
for Prefabricated Weathered Steel Bridges

Dear Mr. Padgett:

Due to the approved design change within Section 1, the prefabricated weathered steel struts also had to be redesigned within Section 1. Prior to the approved design change, the material was already acquired, and a portion was fabricated per the original design. The additional design services and fabrication were required beyond the original scope to accommodate this revision total $289,573.45.

If you have any questions, please do not hesitate to contact me.

Respectfully,

**J. B. COXWELL CONTRACTING, INC.**

Garrett Harrison
Director of Structures


An Equal Opportunity Employer

Docusign Envelope ID: F54DB230-A150-452A-B3F0-14C4A48C193C

J. B. COXWELL CONTRACTING, INC.
6741 Lloyd Road West, Jacksonville, FL 32254-1249
Telephone (904) 786-1120 * Fax (904) 783-2970

**FORCE ACCOUNT**
**DAILY TIME REPORT**

NAME: Carl Padgett GAI Consultants
MAILING ADDRESS: 12574 Flagler Center Blvd Suite 202
CITY: Jacksonville, FL 32258

Date: October 24, 2025
Our Job No.: 2335
Location: Mccoy's Creek Channel Improvements

Additional Material Acquisition and Redesigned Weathered Steel Bridges

Idle Equipment Rate Charged at 50% Blue Book Value

## LABOR

| EMP. NO. | EMPLOYEE'S NAME | OCCUPATION | HOURS | RATE | AMOUNT |
|---|---|---|---|---|---|
| 1 | | | | | $ - |
| 2 | | | | | $ - |
| 3 | | | | | $ - |
| 4 | | | | | $ - |
| 5 | | | | | $ - |
| 6 | | | | | $ - |
| 7 | | | | | $ - |
| 8 | | | | | $ - |
| 9 | | | | | $ - |
| 10 | | | | | $ - |
| | | | SUBTOTAL | | $ - |
| | | | BURDEN (44.52%) | | $ - |
| | | | JBCCI MU 15.0% | | $ - |
| | | | LABOR TOTAL | | $ - |

## EQUIPMENT

| EQUIP. NO. | TYPE OF EQUIPMENT | HOURS | RATE | AMOUNT |
|---|---|---|---|---|
| 1 | | | | $ - |
| 2 | | | | $ - |
| 3 | | | | $ - |
| 4 | | | | $ - |
| 5 | | | | $ - |
| 6 | | | | $ - |
| 7 | | | | $ - |
| 8 | | | | $ - |
| | | | | |
| | | EQUIPMENT SUBTOTAL | | $ - |
| | | JBCCI MU 15.0% | | $ - |
| | | EQUIPMENT TOTAL | | $ - |

## MATERIALS

| | DESCRIPTION | QUANTITY | UNIT | PRICE | AMOUNT |
|---|---|---|---|---|---|
| 1 | Additional Fabrication for Prefabricated Steel Bridges | 72,000.00 | lb | $ 2.68 | $ 192,960.00 |
| 2 | | | | | $ - |
| 3 | | | | | $ - |
| 4 | | | | | $ - |
| 5 | | | | | $ - |
| | | | MATERIALS SUBTOTAL | | $ 192,960.00 |
| | | | Sales Tax (7.5%) | | $ 14,472.00 |
| | | | MATERIALS Mark Up (15.0%) | | $ 31,114.80 |
| | | | MATERIALS TOTAL | | $ 238,546.80 |

## SUBCONTRACTORS

| | DESCRIPTION | QUANTITY | UNIT | PRICE | AMOUNT |
|---|---|---|---|---|---|
| 1 | Engineering Services Redesign of Weathered Steel Bridge | 1.00 | LS | $ 45,000.00 | $ 45,000.00 |
| | | | | | $ - |
| | | | SUBCONTRACTS SUBTOTAL | | $ 45,000.00 |
| | | | SUBCONTRACTS MU (10%) | | $ 4,500.00 |
| | | | SUBCONTRACTS TOTAL | | $ 49,500.00 |

**DESCRIPTION OF WORK:** Additional Material Acquisition and Redesigned Weathered Steel Bridges

| | | |
|---|---|---|
| SUBTOTAL | $ | 288,046.80 |
| 0.53% Bond | $ | 1,526.65 |
| **GRAND TOTAL** | **$** | **289,573.45** |

Report Submitted by: _____

Docusign Envelope ID: F54DB230-A150-452A-B3F0-14C4A48C193C

**Original Material Cost Breakdown**

| Description | Type | Qty | Weight ( lbs) |
|---|---|---|---|
| Weathered Steel Strut | A | 5 | 87858 |
| Weathered Steel Strut | B | 1 | 17571 |
| Weathered Steel Strut | C | 1 | 17571 |
| | | | **123000** |

Revised Material Cost Breakdown

| Description | Type | Qty | Weight ( lbs) |
|---|---|---|---|
| Weathered Steel Strut | A | 1 | 17250 |
| Weathered Steel Strut | B | 1 | 16875 |
| Weathered Steel Strut | B | 1 | 16875 |
| | | | **51000** |

| | | |
|---|---|---|
| Total Original Weight for 7 ea weathered steel Stuts | 123000 | lbs |
| Total Revised Weight for 3 ea weathered steel Stuts | 51000 | lbs |
| Total weight of left over aquired material | 72000 | lbs |

Price per pound of Structural Steel $2.68/lb

| | |
|---|---|
| Total weight of left over aquired material | 72,000lb x $2.68/lb=$192,960.00 |

Docusign Envelope ID: F54DB230-A150-452A-B3F0-14C4A48C193C

INWATER
engineering

February 20, 2024

Garrett Harrison, Director of Structures
J.B. Coxwell Contracting, Inc.
6741 Lloyd Road West
Jacksonville, FL 32254

**RE: Subcontract 2325B – COJ McCoys Ch Improv – Amendment 1**

Garrett,

We are requesting an amendment to the above referenced Subcontract. The purpose of this Amendment is to address additional services and effort required. Specifically, this involves the following

**Item 1 – Additional Truss Design Effort**

The design of Truss Types B and C require modified structural configurations than provided in the Contract Documents. This determination required extensive analyses to evaluate numerous options involving alternative structural configurations, member sizes and connection types to determine the preferred solution from a cost and schedule perspective. Additionally, unforeseen effort was also needed to evaluate the bulkhead cap and interaction with the trusses, which was outside of the original scope of work. This effort resulted in RFI submittals/approvals that modified the truss bearing configurations, reduced bulkhead expansion joints and ultimately reduced design loads on the individual trusses.

**Item 2 – Force Main Support Structures**

We have determined through preliminary structural evaluations that the high relative stiffness of the steel force main pipe will cause it to function as a vertical restraint on the truss. In effect, the pipe is integral to the structure and will experience flexural stresses, deflections, and appreciable concentrated loads that were not considered in the Pipe Stress Analysis provided in the response to RFI 11. Addressing these matters will necessitate an enhanced level of coordination between the Pipe Engineer, JEA and the pipe support vendor to resolve and ultimately detail. Alternatively, the pipe could be independently supported on a separate structure immediately above the truss, spanning between pipe caps, and the third-party coordination would be limited to the support vendor. For either option, additional design and drawing revisions will be required. The total effort required for each option is anticipated to be approximately equal.

Docusign Envelope ID: F54DB230-A150-452A-B3F0-14C4A48C193C



**Amendment Request**

The additional amount requested for Amendment 1 is as follows:

Item 1 – $14,000

Item 2 - $8,000 (for either integral OR independent pipe supports)

Total - $22,000

Thank you once again for the opportunity to work with you on this project.

Sincerely,

Craig McGillawee, PE
President

Docusign Envelope ID: F54DB230-A150-452A-B3F0-14C4A48C193C

INWATER
engineering

August 21, 2024

Garrett Harrison, Director of Structures
J.B. Coxwell Contracting, Inc.
6741 Lloyd Road West
Jacksonville, FL 32254

**RE: Subcontract 2325B – COJ McCoys Ch Improv – Amendment 2 Rev 1**

Garrett,

We are requesting an amendment to the above referenced Subcontract. The purpose of this Amendment is to address additional services and effort required.

**Item 1 – Redesign of Utility Crossing Structures**

The truss braces for the bulkheads are no longer required due to modifications to the Section 1 bulkhead anchoring system. As such, the three utility crossings require standalone bridge structures to span the new channel, and the design previously completed is now invalid. The new utility crossings are to be steel truss framed, utilizing square steel tubing previously procured for the truss braces. The utility crossing frames are to be mounted to the top of the bulkhead caps. All three frames will be structurally identical. Calculation package is included, if required.

**Amendment Request**

The additional lump sum amount requested for Amendment 2 is $23,000.

Thank you once again for the opportunity to work with you on this project.

Sincerely,

Craig McGillawee, PE
President

Jacksonville Florida
904-510-0990 | craig@inwatereng.com
www.inwatereng.com

Docusign Envelope ID: F54DB230-A150-452A-B3F0-14C4A48C193C

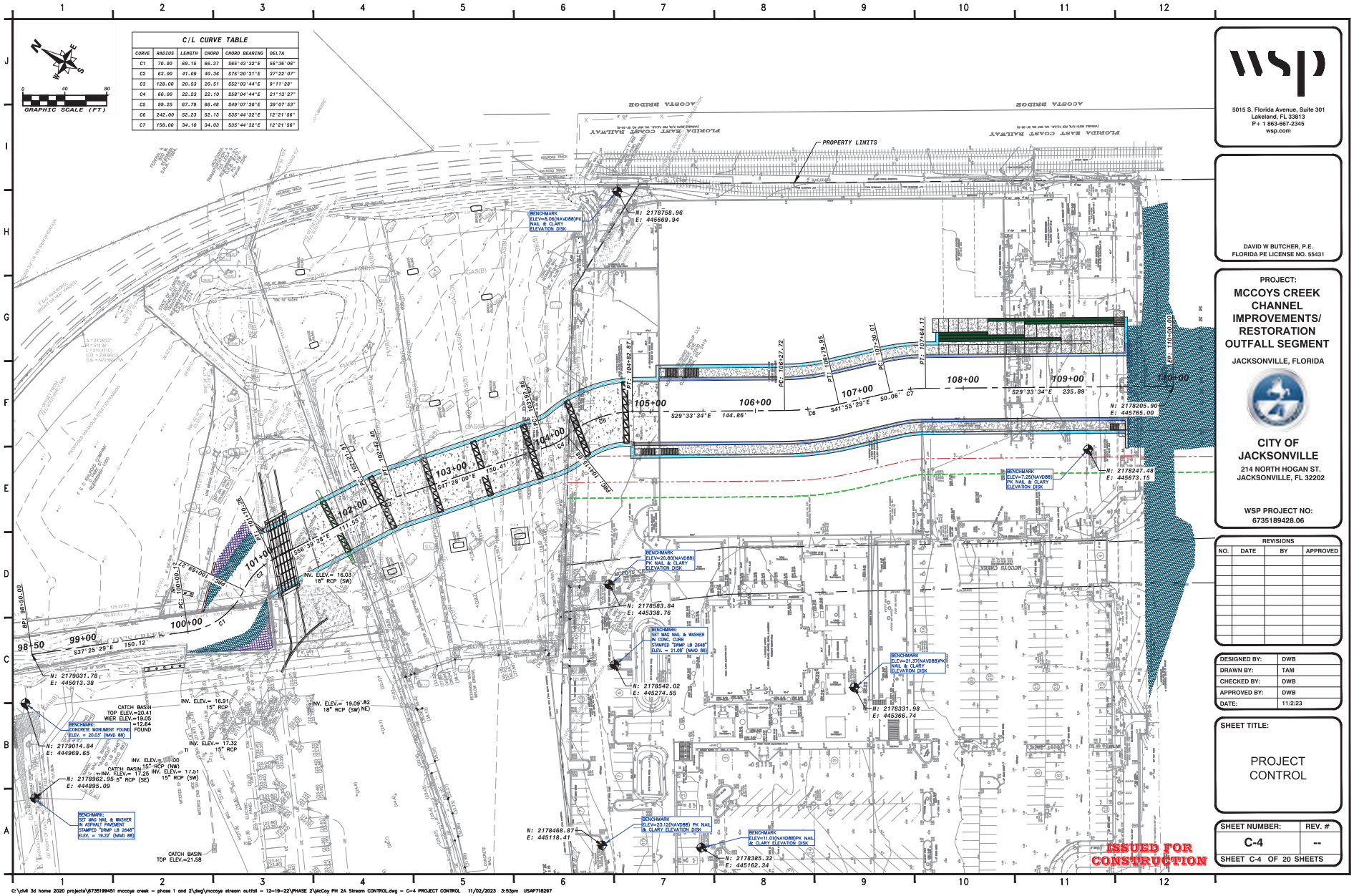


| C/L CURVE TABLE | | | | | |
|---|---|---|---|---|---|
| CURVE | RADIUS | LENGTH | CHORD | CHORD BEARING | DELTA |
| C1 | 70.00 | 69.15 | 66.37 | S65°43'32"E | 56°36'08" |
| C2 | 63.00 | 41.09 | 40.36 | S75°20'31"E | 37°22'07" |
| C3 | 128.00 | 20.53 | 20.51 | S52°03'44"E | 9°11'28" |
| C4 | 60.00 | 22.23 | 22.10 | S58°04'44"E | 21°13'23" |
| C5 | 99.25 | 67.79 | 66.48 | S49°07'30"E | 39°07'53" |
| C6 | 242.00 | 52.23 | 52.13 | S35°44'32"E | 12°21'56" |
| C7 | 158.00 | 34.10 | 34.03 | S35°44'32"E | 12°21'56" |

wsp
5015 S. Florida Avenue, Suite 301
Lakeland, FL 33813
P+ 1 863-667-2345
wsp.com

DAVID W BUTCHER, P.E.
FLORIDA PE LICENSE NO. 55431

PROJECT:
**MCCOYS CREEK CHANNEL IMPROVEMENTS/ RESTORATION OUTFALL SEGMENT**
JACKSONVILLE, FLORIDA

**CITY OF JACKSONVILLE**
214 NORTH HOGAN ST.
JACKSONVILLE, FL 32202

WSP PROJECT NO:
6735189428.06

REVISIONS

| NO. | DATE | BY | APPROVED |
|---|---|---|---|
| | | | |

| | |
|---|---|
| DESIGNED BY: | DWB |
| DRAWN BY: | TAM |
| CHECKED BY: | DWB |
| APPROVED BY: | DWB |
| DATE: | 11/2/23 |

SHEET TITLE:
PROJECT CONTROL

| SHEET NUMBER: | REV. # |
|---|---|
| C-4 | -- |
| SHEET C-4 OF 20 SHEETS | |

C:\civil 3d home 2020 projects\6735189451 mccoys creek - phase 1 and 2\dwg\mccoys stream outfall - 12-19-22\PHASE 2\McCoy PH 2A Stream CONTROL.dwg - C-4 PROJECT CONTROL 11/02/2023 3:53pm USAP718297

Docusign Envelope ID: F54DB230-A150-452A-B3F0-14C4A48C193C

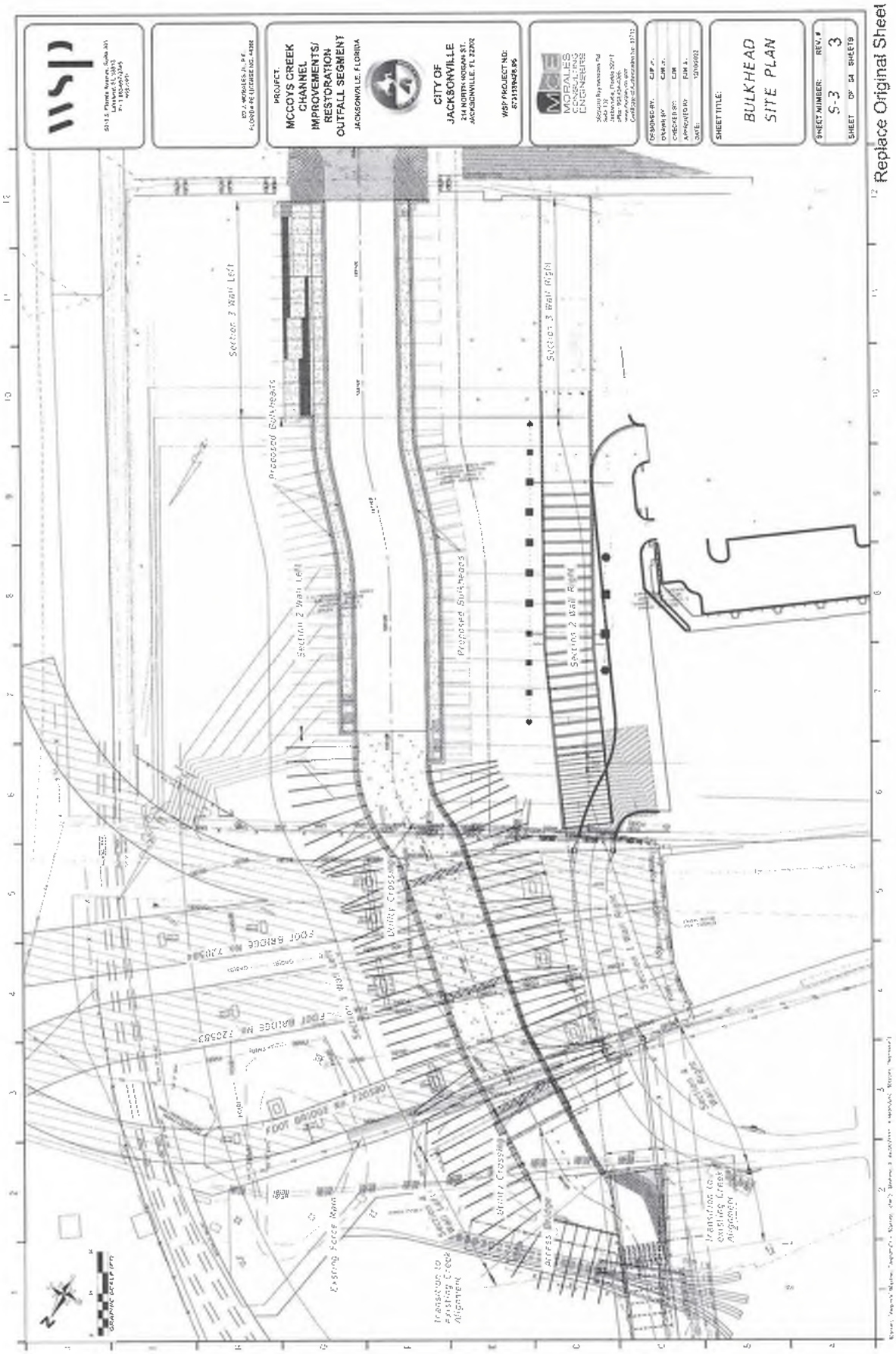


Replace Original Sheet

Docusign Envelope ID: F54DB230-A150-452A-B3F0-14C4A48C193C

# CHANGE ORDER REQUEST #27

# DISPOSAL OF CONTAMINATED MATERIAL FROM CHANNEL

# MCCOY'S CREEK OUTFALL REALIGNMENT

# COJ CONTRACT NO.: 70646-23

# OCTOBER 26, 2025

Docusign Envelope ID: F54DB230-A150-452A-B3F0-14C4A48C193C

# GAI ENTITLEMENT ANALYSIS

# CHANGE ORDER REQUEST #27

# DISPOSAL OF CONTAMINATED MATERIAL FROM CHANNEL

# MCCOY'S CREEK OUTFALL REALIGNMENT

# OCTOBER 26, 2025

Docusign Envelope ID: F54DB230-A150-452A-B3F0-14C4A48C193C

# Entitlement Analysis COR #27 – Disposal of Contaminated Materials in Channel

Job Description: McCoy's Creek Outfall Realignment
COJ Contract Number: 70646-23
October 26, 2025

## 1. Background

During excavation within the proposed channel, JBCCI encountered a substantial number of undisclosed debris in the new channel footprint in Sections 2 & 3. This debris was not identified in the Contract Documents, project drawings, or geotechnical information provided at the time of bid. Due to its location and in accordance with project specifications, the material was required to be removed, processed, and disposed of at the Trail Ridge Landfill. JBCCI performed the necessary steps to excavate, stockpile, condense, load, haul, and dispose of debris. These tasks exceeded the original excavation scope and resulted in additional costs totaling $102,308.68.

## 2. Entitlement Analysis

The conditions encountered by JBCCI meet the criteria of a differing site condition under the Contract. The Contract Documents did not indicate the presence of buried debris within the excavation limits of the channel, nor was there any reasonable basis for the Contractor to anticipate such conditions during pre-bid investigations. JBCCI relied on the project plans, specifications, and subsurface information furnished by the Owner. The discovery of a large volume of debris was both unforeseen and not reasonably discoverable, creating a condition materially different from those represented in the Contract. As a result, JBCCI was compelled to perform additional excavation, material handling, and landfill disposal efforts outside the original scope of work. These impacts stemmed exclusively from an Owner-responsible differing site condition and not from JBCCI's means, methods, or performance. Therefore, JBCCI is contractually entitled to an equitable adjustment for the additional work required due to the undisclosed debris.

## 3. Impact Analysis

The presence of the unexpected debris directly affected excavation operations in the channel footprint in Sections 2 & 3. The debris required JBCCI to halt planned channel excavation and shift labor, equipment, and trucking resources to perform debris segregation, stockpiling, consolidation, loading, and off-site disposal. These additional steps were not part of the original scope and resulted in:

a. Increased labor hours and equipment runtime
b. Additional trucking for off-site disposal
c. Disposal fees at Trail Ridge Landfill and
d. Reduced production rates and extended excavation durations.

Docusign Envelope ID: F54DB230-A150-452A-B3F0-14C4A48C193C

The additional work was necessary solely because of the undisclosed condition encountered and could not have been avoided or mitigated through normal construction planning.
The cumulative effect of these impacts resulted in a documented cost of $102,308.68, exclusive to this unforeseen condition.

4. **Conclusion**

JBCCI encountered a differing site condition in the new channel footprint consisting of substantial buried debris that was not shown in the Contract Documents, not anticipated at bid time, and not discoverable through reasonable site review. Removal and disposal of this debris required additional labor, equipment, trucking, and landfill fees beyond the original scope. In accordance with the Contract, JBCCI respectfully requests an equitable adjustment in the amount of $102,308.68 to fully compensate for the additional costs incurred as a result of this unforeseen condition. The Contractor's price of $102,308.68 compared favorably with GAI's Engineer's Estimate of $102,308.67, which is a Delta of $0.01 or 0.00%. JBCCI requests that this adjustment be reviewed and incorporated into the Contract through a formal Change Order Request.

Docusign Envelope ID: F54DB230-A150-452A-B3F0-14C4A48C193C

# GAI ENGINEER'S ESTIMATE

# CHANGE ORDER REQUEST #27

# DISPOSAL OF CONTAMINATED MATERIAL FROM CHANNEL

# MCCOY'S CREEK OUTFALL REALIGNMENT

# OCTOBER 26, 2025

**ENGINEER'S ESTIMATE OF EXTRA WORK**
**PROJECT**: MCOY'S CREEK OUTFALL REALIGNMENT
**COJ CONTRACT NO.:** 70646-23
**CHANGE ORDER NO.: 27**
**ISSUE:** Load/Transport/Disposal of Contaminated Debris within Sections 2 & 3
**DATE**: October 25, 2025

gai consultants
transforming ideas into reality

**LABOR**

| JB COXWELL | | | | | | | |
|---|---|---|---|---|---|---|---|
| **POSITION** | **QTY.** | **UNIT** | **RATE** | **BURDENED RATE** | **EXTENDED COST** | **AMOUNT** | **COMMENT** |
| Foreman-Decid | 40 | Hours | $ 31.00 | | | $ 1,240.00 | Regular Time |
| Laborer-Suarez | 40 | Hours | $ 18.00 | | | $ 720.00 | Regular Time |
| Operator-Guitierrez | 40 | Hours | $ 23.00 | | | $ 920.00 | Regular Time |
| Operator-Sanders | 40 | Hours | $ 25.00 | | | $ 1,000.00 | Regular Time |
| | | | | | | | Regular Time |
| | | | | | | $ 3,880.00 | |
| | | | | 44.52% | | $ 1,727.38 | |
| | | | Mark-Up | 15.00% | | $ 841.11 | |
| **LABOR TOTAL** | | | | | | **$ 6,448.48** | |

**EQUIPMENT**

| JB COXWELL | QTY. | UNIT | RATE | BURDENED RATE | EXTENDED COST | AMOUNT | COMMENT |
|---|---|---|---|---|---|---|---|
| 336 Excavator | 40 | HRS. | $ 113.84 | | | $ 4,553.60 | |
| Breaker for 323 Excavator | 40 | HRS. | $ 28.61 | | | $ 1,144.40 | |
| 323 Excavator | 40 | HRS. | $ 133.37 | | | $ 5,334.80 | |
| Front End Loader | 40 | HRS. | $ 62.19 | | | $ 2,487.60 | |
| F-350 | 40 | HRS. | $ 31.44 | | | $ 1,257.60 | |
| | | | Mark-Up | 15.00% | | $ 2,216.70 | |
| | | | | | | **$ 16,994.70** | |

**MATERIALS**

| JB COXWELL | PAY ITEM NUMBER | UNIT | | QUANTITY | UNIT PRICE | AMOUNT | COMMENT |
|---|---|---|---|---|---|---|---|
| | | | | | | $ - | |
| | | | | | | $ - | |
| **MATERIALS TOTAL** | | | | | | **$0.00** | |

**INVOICES**

| JB COXWELL | PAY ITEM NUMBER | UNIT | | QUANTITY | UNIT PRICE | AMOUNT | COMMENT: |
|---|---|---|---|---|---|---|---|
| **City of Jacksonville Landfill** | | **L.S.** | | | **$78,741.24** | **$78,741.24** | |
| **Subtotal Labor/Equipment** | | | | | | **$ 23,443.18** | |
| **Bond** | | 0.53% | | | | **$124.25** | |
| **Invoices** | | | | | | **$78,741.24** | |
| Prepared By: | | | | | | | |
| J.Carlton Padgett Jr. E.I., CGC | J.Carlton Padgett Jr. E.I., CGC | | | | | | |
| Project Administrator | 25-Oct-25 | | | | | | |
| GAI Consultants Inc. | | | | | | | |
| **JB Coxwell Price Quote** | | | | | | **$102,308.68** | |
| **GAI Engineer's Estimate** | | | | | | **$102,308.67** | |
| **DELTA** | | | | | | **$ 0.01** | **0%** |

Docusign Envelope ID: F54DB230-A150-452A-B3F0-14C4A48C193C

# GAI DAILIES

# CHANGE ORDER REQUEST #27

# DISPOSAL OF CONTAMINATED MATERIAL FROM CHANNEL

# MCCOY'S CREEK OUTFALL REALIGNMENT

# OCTOBER 26, 2025

**CITY OF JACKSONVILLE**
**CONTRACTOR'S DAILY REPORT**

| Date: | FDOT/COJ Contract ID: | Financial Project ID: | Inspector: |
|---|---|---|---|
| 7/9/2025 | 70646-23 | | Jeremy Cundiff |

| HIGH Temp: 93F | AM Conditions: | PM Conditions |
|---|---|---|
| LOW Temp: 73F | Clear | Afternoon Thunderstorms |

| Remarks |
|---|
| General: |
| |
| |

| |
|---|
| |

| |
|---|
| 1.) Delamere Industries installed 60 linear feet of custom handrail on right bulkhead in section 2. |
| 2.) JBC continued to dewater on site |
| 3.) JBC continued formwork for 3 planter boxes in section 3 staging area |
| 4.) JBC continued formwork for upper right bulkhead in section 4 |
| 5.) JBC continued welding on JTA anchors for existing bulkhead in section 4 |
| 6.) Jobsite cleanup. |
| |
| |
| |

| Accidents: | See accident report dated: | Day of week | Contract day | Total days |
|---|---|---|---|---|
| X No ☐ Yes | | Wednesday | 563 | 603 |
| Visitors: | | | | |

**Contractor(s) and Personnel**

| # | Name | Type | # | Hrs | Type | # | Hrs | Type | # | Hrs |
|---|---|---|---|---|---|---|---|---|---|---|
| 1 | **J.B.Coxwell** | Supt | 1 | 8 | Foreman | 2 | 8 | Skilled | 10 | 8 |
| | | Semi Skilled | | | Common | | | Trainee | | |
| 2 | **Maylor** | Supt | | | Foreman | 0 | 0 | Skilled | 0 | 0 |
| | | Semi Skilled | | | Common | | | Trainee | | |
| 3 | **Delamere Industries** | Supt | | | Foreman | 1 | 8 | Skilled | 2 | 8 |
| | | Semi Skilled | | | Common | | | Trainee | | |
| 4 | | Supt | | | Foreman | | | Skilled | | |
| | | Semi Skilled | | | Common | | | Trainee | | |

**Contractor(s) Equipment (Active or Idle)**

| Contr/ | Equipment ID | Description | # | # | Total Hours Used |
|---|---|---|---|---|---|
| 1 | JBC | Work trucks | 3 | 3 | 8 |

| | | | | | |
|---|---|---|---|---|---|
| 2 | Maylor | Drill Rig | 1 | 0 | 0 |
| 2 | Maylor | Grout Pump | 1 | 0 | 0 |
| 2 | Maylor | Forklift | 1 | 0 | 0 |
| 2 | Maylor | Water pump | 1 | 0 | 0 |
| 2 | Maylor | Excavator | 1 | 0 | 0 |
| 3 | Delamere | Work trucks | 2 | 2 | 8 |
| | | | | | |
| | | | | | |
| | | | | | |

| **Date:** | **Contract ID:** |
|---|---|
| 7/9/2025 | 71178-21 |

**CITY OF JACKSONVILLE**
**CONTRACTOR'S DAILY REPORT**

**Estimated Work Performed**

| Contr/ Sub # | Line Item # | Pay Item Code | Location | Time (AM/PM) | | Installed | |
|---|---|---|---|---|---|---|---|
| | | | | Begin | End | Qty | Units |
| | | | | | | | |
| | | | | | | | |
| | | | | | | | |
| | | | | | | | |
| | | | | | | | |
| | | | | | | | |
| | | | | | | | |
| | | | | | | | |

EFFECTS OF WEATHER ON MAJOR WORK ITEMS (CHECK CONTROLLING ITEMS):

| Major and/or Controlling Work Items | No Effect All | Affected Less Than | Affected More Than 50% | No Work All Day |
|---|---|---|---|---|
| | x | | | |
| | | | | |
| | | | | |
| | | | | |
| | | | | |
| | | | | |

## CONTRACTOR PAST PERFORMANCE

| | |
|---|---|
| PURSUIT OF THE WORK: | [X] Yes [ ] No |
| CONFORMANCE WITH CONTRACT DOCUMENTS: | [X] Yes [ ] No |

| TECHNICIANS SIGNATURE AND RATING: | HOURS AT JOB SITE | | TOTAL HOURS |
|---|---|---|---|
| Jeremy Cundiff | FROM: 7:00am | TO: 3:30pm | 8.0 |
| ENGINEER IN CHARGE (NAME, RANK AND INITIALS): | | | |
| 7/9/2025 | | | |

**CITY OF JACKSONVILLE**
**CONTRACTOR'S DAILY REPORT**

Attachment Page

| Date | | Financial Project ID: | Inspector: |
|---|---|---|---|
| 7/9/2025 | 71178-21 | | Jeremy Cundiff |

| Remarks |
|---|
| General: |
| Precipitation: 0.54" |
| |
| |
| |
| |
| |
| |
| |

| Accidents: | See accident report dated: | Day of week | Contract day | Total days |
|---|---|---|---|---|
| x No [ ] Yes | | Wednesday | 563 | 603 |
| Visitors: | | | | |

**Contractor(s) Equipment (Active or Idle)**

| Contr/ Sub # | Equipment ID | Description | # Pieces | # Used | Total Hours Used |
|---|---|---|---|---|---|
| 1 | CAT G350 | Front Loader | 2 | 2 | 8 |
| 1 | CAT 335 | Excavator | 3 | 3 | 8 |
| 1 | CAT CS54B | Roller | 0 | 0 | 0 |
| 1 | CAT CD087 | Dozer | 0 | 0 | 0 |
| 1 | | Water Truck | 1 | 1 | 8 |
| 1 | Liebherr | Crawler Crane | 1 | 1 | 8 |
| 1 | | Water Pump | 4 | 4 | 8 |
| 1 | | Fuel Truck | 1 | 1 | 8 |
| 1 | Grove CRT001 | Mobile Crane | 1 | 0 | 0 |
| 1 | Ford | Dump Truck | 0 | 0 | 0 |
| 1 | CAT 308 | Mini Excavator | 0 | 0 | 0 |
| 1 | CAT 315F | Excavator | 0 | 0 | 0 |
| 1 | CAT | Backhoe w\breaker | 0 | 0 | 0 |
| 1 | Rental | Man lift | 2 | 2 | 8 |
| 1 | | Street Sweeper | 1 | 0 | 0 |
| | | | | | |
| | | | | | |
| | | | | | |

**CITY OF JACKSONVILLE**
**CONTRACTOR'S DAILY REPORT**

| Date: | FDOT/COJ Contract ID: | Financial Project ID: | Inspector: |
|---|---|---|---|
| 7/10/2025 | 70646-23 | | Jeremy Cundiff |

| HIGH Temp: 93F | AM Conditions: | PM Conditions |
|---|---|---|
| LOW Temp: 74F | Clear | Afternoon Thunderstorms |

| Remarks |
|---|
| General: |
| |
| |

| |
|---|
| |

1.) Delamere Industries installed 350 linear feet of custom handrail on right/left bulkhead in section 2.
2.) JBC continued to dewater on site
3.) JBC cleanup around site (scrap lumber etc.)
4.) JBC continued formwork for upper right bulkhead in section 4 pour scheduled for 7/11
5.) JBC painted connex box

| Accidents: | See accident report dated: | Day of week | Contract day | Total days |
|---|---|---|---|---|
| X No [ ] Yes | | Thursday | 564 | 603 |

Visitors:

**Contractor(s) and Personnel**

| # | Name | Type | # | Hrs | Type | # | Hrs | Type | # | Hrs |
|---|---|---|---|---|---|---|---|---|---|---|
| 1 | **J.B.Coxwell** | Supt | 1 | 8 | Foreman | 2 | 8 | Skilled | 10 | 8 |
| | | Semi Skilled | | | Common | | | Trainee | | |
| 2 | **Maylor** | Supt | | | Foreman | 0 | 0 | Skilled | 0 | 0 |
| | | Semi Skilled | | | Common | | | Trainee | | |
| 3 | **Delamere Industries** | Supt | | | Foreman | 1 | 10 | Skilled | 2 | 10 |
| | | Semi Skilled | | | Common | | | Trainee | | |
| 4 | | Supt | | | Foreman | | | Skilled | | |
| | | Semi Skilled | | | Common | | | Trainee | | |

**Contractor(s) Equipment (Active or Idle)**

| Contr/ | Equipment ID | Description | # | # | Total Hours Used |
|---|---|---|---|---|---|
| 1 | JBC | Work trucks | 3 | 3 | 8 |

| | | | | | |
|---|---|---|---|---|---|
| 2 | Maylor | Drill Rig | 1 | 0 | 0 |
| 2 | Maylor | Grout Pump | 1 | 0 | 0 |
| 2 | Maylor | Forklift | 1 | 0 | 0 |
| 2 | Maylor | Water pump | 1 | 0 | 0 |
| 2 | Maylor | Excavator | 1 | 0 | 0 |
| 3 | Delamere | Work trucks | 2 | 2 | 10 |
| | | | | | |
| | | | | | |
| | | | | | |

| **Date:** | **Contract ID:** |
|---|---|
| 7/10/2025 | 71178-21 |

**CITY OF JACKSONVILLE**
**CONTRACTOR'S DAILY REPORT**

| **Estimated Work Performed** | | | | | | | |
|---|---|---|---|---|---|---|---|
| Contr/ Sub # | Line Item # | Pay Item Code | Location | Time (AM/PM) | | Installed | |
| | | | | Begin | End | Qty | Units |
| | | | | | | | |
| | | | | | | | |
| | | | | | | | |
| | | | | | | | |
| | | | | | | | |
| | | | | | | | |
| | | | | | | | |
| | | | | | | | |

EFFECTS OF WEATHER ON MAJOR WORK ITEMS (CHECK CONTROLLING ITEMS):

| Major and/or Controlling Work Items | No Effect All | Affected Less Than | Affected More Than 50% | No Work All Day |
|---|---|---|---|---|
| | x | | | |
| | | | | |
| | | | | |
| | | | | |
| | | | | |
| | | | | |

## CONTRACTOR PAST PERFORMANCE

| | |
|---|---|
| PURSUIT OF THE WORK: | [X] Yes [ ] No |
| CONFORMANCE WITH CONTRACT DOCUMENTS: | [X] Yes [ ] No |

| TECHNICIANS SIGNATURE AND RATING: | HOURS AT JOB SITE | | TOTAL HOURS |
|---|---|---|---|
| Jeremy Cundiff | FROM: 7:00am | TO: 4:30pm | 9.0 |
| ENGINEER IN CHARGE (NAME, RANK AND INITIALS): | | | |
| 7/10/2025 | | | |

**CITY OF JACKSONVILLE**
**CONTRACTOR'S DAILY REPORT**

Attachment Page

| Date | | Financial Project ID: | Inspector: |
|---|---|---|---|
| 7/10/2025 | 71178-21 | | Jeremy Cundiff |

| Remarks |
|---|
| General: |
| Precipitation: 0.64" |
| |
| |
| |
| |
| |
| |
| |

| Accidents: | See accident report dated: | Day of week | Contract day | Total days |
|---|---|---|---|---|
| x No [ ] Yes | | Thursday | 564 | 603 |
| Visitors: | | | | |

**Contractor(s) Equipment (Active or Idle)**

| Contr/ Sub # | Equipment ID | Description | # Pieces | # Used | Total Hours Used |
|---|---|---|---|---|---|
| 1 | CAT G350 | Front Loader | 2 | 2 | 8 |
| 1 | CAT 335 | Excavator | 3 | 3 | 8 |
| 1 | CAT CS54B | Roller | 0 | 0 | 0 |
| 1 | CAT CD087 | Dozer | 0 | 0 | 0 |
| 1 | | Water Truck | 1 | 1 | 8 |
| 1 | Liebherr | Crawler Crane | 1 | 1 | 8 |
| 1 | | Water Pump | 4 | 4 | 8 |
| 1 | | Fuel Truck | 1 | 1 | 8 |
| 1 | Grove CRT001 | Mobile Crane | 1 | 0 | 0 |
| 1 | Ford | Dump Truck | 0 | 0 | 0 |
| 1 | CAT 308 | Mini Excavator | 0 | 0 | 0 |
| 1 | CAT 315F | Excavator | 0 | 0 | 0 |
| 1 | CAT | Backhoe w\breaker | 0 | 0 | 0 |
| 1 | Rental | Man lift | 2 | 2 | 8 |
| 1 | | Street Sweeper | 1 | 0 | 0 |
| | | | | | |
| | | | | | |
| | | | | | |

**CITY OF JACKSONVILLE**
**CONTRACTOR'S DAILY REPORT**

| Date: | FDOT/COJ Contract ID: | Financial Project ID: | Inspector: |
|---|---|---|---|
| 7/11/2025 | 70646-23 | | Jeremy Cundiff |

| | | |
|---|---|---|
| HIGH Temp: 95F | AM Conditions: | PM Conditions |
| LOW Temp: 72F | Clear | Partly Cloudy |

| Remarks |
|---|
| General: |
| |
| |

| |
|---|
| |

| |
|---|
| 1.) JBC concrete placement for upper right bulkhead and cap in section 4. (80 cubic yards) |
| 2.) JBC continued to dewater on site |
| 3.) JBC cleanup around site (scrap lumber etc.) |
| |
| |
| |
| |
| |
| |

| Accidents: | See accident report dated: | Day of week | Contract day | Total days |
|---|---|---|---|---|
| X No ☐ Yes | | Friday | 565 | 603 |

Visitors:

**Contractor(s) and Personnel**

| # | Name | Type | # | Hrs | Type | # | Hrs | Type | # | Hrs |
|---|---|---|---|---|---|---|---|---|---|---|
| 1 | **J.B.Coxwell** | Supt | 1 | 8 | Foreman | 2 | 8 | Skilled | 10 | 8 |
| | | Semi Skilled | | | Common | | | Trainee | | |
| 2 | **Maylor** | Supt | | | Foreman | 0 | 0 | Skilled | 0 | 0 |
| | | Semi Skilled | | | Common | | | Trainee | | |
| 3 | **Delamere Industries** | Supt | | | Foreman | 0 | 0 | Skilled | 0 | 0 |
| | | Semi Skilled | | | Common | | | Trainee | | |
| 4 | | Supt | | | Foreman | | | Skilled | | |
| | | Semi Skilled | | | Common | | | Trainee | | |

**Contractor(s) Equipment (Active or Idle)**

| Contr/ | Equipment ID | Description | # | # | Total Hours Used |
|---|---|---|---|---|---|
| 1 | JBC | Work trucks | 3 | 3 | 8 |

| | | | | | |
|---|---|---|---|---|---|
| 2 | Maylor | Drill Rig | 1 | 0 | 0 |
| 2 | Maylor | Grout Pump | 1 | 0 | 0 |
| 2 | Maylor | Forklift | 1 | 0 | 0 |
| 2 | Maylor | Water pump | 1 | 0 | 0 |
| 2 | Maylor | Excavator | 1 | 0 | 0 |
| 3 | Delamere | Work trucks | 0 | 0 | 0 |
| | | | | | |
| | | | | | |
| | | | | | |

| **Date:** | **Contract ID:** |
|---|---|
| 7/11/2025 | 71178-21 |

**CITY OF JACKSONVILLE**
**CONTRACTOR'S DAILY REPORT**

| **Estimated Work Performed** | | | | | | | |
|---|---|---|---|---|---|---|---|
| Contr/ Sub # | Line Item # | Pay Item Code | Location | Time (AM/PM) | | Installed | |
| | | | | Begin | End | Qty | Units |
| | | | | | | | |
| | | | | | | | |
| | | | | | | | |
| | | | | | | | |
| | | | | | | | |
| | | | | | | | |
| | | | | | | | |
| | | | | | | | |

EFFECTS OF WEATHER ON MAJOR WORK ITEMS (CHECK CONTROLLING ITEMS):

| Major and/or Controlling Work Items | No Effect All | Affected Less Than | Affected More Than 50% | No Work All Day |
|---|---|---|---|---|
| | x | | | |
| | | | | |
| | | | | |
| | | | | |
| | | | | |
| | | | | |

## CONTRACTOR PAST PERFORMANCE

| | |
|---|---|
| PURSUIT OF THE WORK: | [x] Yes [ ] No |
| CONFORMANCE WITH CONTRACT DOCUMENTS: | [X] Yes [ ] No |

| TECHNICIANS SIGNATURE AND RATING: | HOURS AT JOB SITE | | TOTAL HOURS |
|---|---|---|---|
| Jeremy Cundiff | FROM: 7:00am | TO: 4:30pm | 9.0 |
| ENGINEER IN CHARGE (NAME, RANK AND INITIALS): | | | |
| 7/11/2025 | | | |

**CITY OF JACKSONVILLE**
**CONTRACTOR'S DAILY REPORT**

Attachment Page

| Date | | Financial Project ID: | Inspector: |
|---|---|---|---|
| 7/11/2025 | 71178-21 | | Jeremy Cundiff |

| Remarks |
|---|
| General: |
| Precipitation: 0.44" |
| CSI Geo 2 Concrete inspections |
| Slump 8", 8" |
| Air 1.0%, 1.6% |
| Temp 88F, 95F |
| 14 Cylinders made 1 3d, 1 5d, 1 7d, 3 28d, 1 hold |
| |
| |

| Accidents: | See accident report dated: | Day of week | Contract day | Total days |
|---|---|---|---|---|
| x No ☐ Yes | | Friday | 565 | 603 |
| Visitors: | | | | |

**Contractor(s) Equipment (Active or Idle)**

| Contr/ Sub # | Equipment ID | Description | # Pieces | # Used | Total Hours Used |
|---|---|---|---|---|---|
| 1 | CAT G350 | Front Loader | 2 | 2 | 8 |
| 1 | CAT 335 | Excavator | 3 | 3 | 8 |
| 1 | CAT CS54B | Roller | 0 | 0 | 0 |
| 1 | CAT CD087 | Dozer | 0 | 0 | 0 |
| 1 | | Water Truck | 1 | 1 | 8 |
| 1 | Liebherr | Crawler Crane | 1 | 1 | 8 |
| 1 | | Water Pump | 4 | 4 | 8 |
| 1 | | Fuel Truck | 1 | 1 | 8 |
| 1 | Grove CRT001 | Mobile Crane | 1 | 0 | 0 |
| 1 | Ford | Dump Truck | 0 | 0 | 0 |
| 1 | CAT 308 | Mini Excavator | 0 | 0 | 0 |
| 1 | CAT 315F | Excavator | 0 | 0 | 0 |
| 1 | CAT | Backhoe w\breaker | 0 | 0 | 0 |
| 1 | Rental | Man lift | 2 | 2 | 8 |
| 1 | | Street Sweeper | 1 | 0 | 0 |
| | | | | | |
| | | | | | |
| | | | | | |

**CITY OF JACKSONVILLE**
**CONTRACTOR'S DAILY REPORT**

| Date: | FDOT/COJ Contract ID: | Financial Project ID: | Inspector: |
|---|---|---|---|
| 7/12/2025 | 70646-23 | | Jeremy Cundiff |

| HIGH Temp: 94F | AM Conditions: | PM Conditions |
|---|---|---|
| LOW Temp: 75F | Clear | Afternoon Thunderstorms |

| Remarks |
|---|
| General: |
| |
| |

| |
|---|
| |

| No Contractor on site | | | | |
|---|---|---|---|---|
| | | | | |
| | | | | |
| | | | | |
| | | | | |
| | | | | |
| | | | | |
| | | | | |
| | | | | |
| Accidents: X No Yes | See accident report dated: | Day of week Saturday | Contract day 566 | Total days 603 |
| Visitors: | | | | |

**Contractor(s) and Personnel**

| # | Name | Type | # | Hrs | Type | # | Hrs | Type | # | Hrs |
|---|---|---|---|---|---|---|---|---|---|---|
| 1 | **J.B.Coxwell** | Supt | 0 | 0 | Foreman | 0 | 0 | Skilled | 0 | 0 |
| | | Semi Skilled | | | Common | | | Trainee | | |
| 2 | **Maylor** | Supt | | | Foreman | 0 | 0 | Skilled | 0 | 0 |
| | | Semi Skilled | | | Common | | | Trainee | | |
| 3 | **Delamere Industries** | Supt | | | Foreman | 0 | 0 | Skilled | 0 | 0 |
| | | Semi Skilled | | | Common | | | Trainee | | |
| 4 | | Supt | | | Foreman | | | Skilled | | |
| | | Semi Skilled | | | Common | | | Trainee | | |

**Contractor(s) Equipment (Active or Idle)**

| Contr/ | Equipment ID | Description | # | # | Total Hours Used |
|---|---|---|---|---|---|
| 1 | JBC | Work trucks | 3 | 0 | 0 |

| | | | | | |
|---|---|---|---|---|---|
| 2 | Maylor | Drill Rig | 1 | 0 | 0 |
| 2 | Maylor | Grout Pump | 1 | 0 | 0 |
| 2 | Maylor | Forklift | 1 | 0 | 0 |
| 2 | Maylor | Water pump | 1 | 0 | 0 |
| 2 | Maylor | Excavator | 1 | 0 | 0 |
| 3 | Delamere | Work trucks | 0 | 0 | 0 |
| | | | | | |
| | | | | | |
| | | | | | |

| **Date:** | **Contract ID:** |
|---|---|
| 7/12/2025 | 71178-21 |

**CITY OF JACKSONVILLE**
**CONTRACTOR'S DAILY REPORT**

| **Estimated Work Performed** | | | | | | | |
|---|---|---|---|---|---|---|---|
| Contr/ Sub # | Line Item # | Pay Item Code | Location | Time (AM/PM) | | Installed | |
| | | | | Begin | End | Qty | Units |
| | | | | | | | |
| | | | | | | | |
| | | | | | | | |
| | | | | | | | |
| | | | | | | | |
| | | | | | | | |
| | | | | | | | |
| | | | | | | | |

EFFECTS OF WEATHER ON MAJOR WORK ITEMS (CHECK CONTROLLING ITEMS):

| Major and/or Controlling Work Items | No Effect All | Affected Less Than | Affected More Than 50% | No Work All Day |
|---|---|---|---|---|
| | x | | | |
| | | | | |
| | | | | |
| | | | | |
| | | | | |
| | | | | |

## CONTRACTOR PAST PERFORMANCE

| | |
|---|---|
| PURSUIT OF THE WORK: | [ ] Yes [x] No |
| CONFORMANCE WITH CONTRACT DOCUMENTS: | [X] Yes [ ] No |

| TECHNICIANS SIGNATURE AND RATING: | HOURS AT JOB SITE | | TOTAL HOURS |
|---|---|---|---|
| Jeremy Cundiff | FROM: | TO: | |
| ENGINEER IN CHARGE (NAME, RANK AND INITIALS): | | | |
| 7/12/2025 | | | |

**CITY OF JACKSONVILLE**
**CONTRACTOR'S DAILY REPORT**

Attachment Page

| Date | | Financial Project ID: | Inspector: |
|---|---|---|---|
| 7/12/2025 | 71178-21 | | Jeremy Cundiff |

| Remarks |
|---|
| General: |
| |
| |
| |
| |
| |
| |
| |
| |

| Accidents: | See accident report dated: | Day of week | Contract day | Total days |
|---|---|---|---|---|
| x No ☐ Yes | | Saturday | 566 | 603 |
| Visitors: | | | | |

**Contractor(s) Equipment (Active or Idle)**

| Contr/ Sub # | Equipment ID | Description | # Pieces | # Used | Total Hours Used |
|---|---|---|---|---|---|
| 1 | CAT G350 | Front Loader | 2 | 0 | 0 |
| 1 | CAT 335 | Excavator | 3 | 0 | 0 |
| 1 | CAT CS54B | Roller | 0 | 0 | 0 |
| 1 | CAT CD087 | Dozer | 0 | 0 | 0 |
| 1 | | Water Truck | 1 | 0 | 0 |
| 1 | Liebherr | Crawler Crane | 1 | 0 | 0 |
| 1 | | Water Pump | 4 | 0 | 0 |
| 1 | | Fuel Truck | 1 | 0 | 0 |
| 1 | Grove CRT001 | Mobile Crane | 1 | 0 | 0 |
| 1 | Ford | Dump Truck | 0 | 0 | 0 |
| 1 | CAT 308 | Mini Excavator | 0 | 0 | 0 |
| 1 | CAT 315F | Excavator | 0 | 0 | 0 |
| 1 | CAT | Backhoe w\breaker | 0 | 0 | 0 |
| 1 | Rental | Man lift | 2 | 0 | 0 |
| 1 | | Street Sweeper | 1 | 0 | 0 |
| | | | | | |
| | | | | | |
| | | | | | |

Docusign Envelope ID: F54DB230-A150-452A-B3F0-14C4A48C193C

# CONTRACTOR'S DOCUMENTATION

# CHANGE ORDER REQUEST #27

# DISPOSAL OF CONTAMINATED MATERIAL FROM CHANNEL

# MCCOY'S CREEK OUTFALL REALIGNMENT

# OCTOBER 26, 2025

Docusign Envelope ID: F54DB230-A150-452A-B3F0-14C4A48C193C

**J.B. Coxwell Contracting, Inc.**
6741 Lloyd Road West
Jacksonville, Florida 32254
Office (904) 786-1120 Fax (904) 783-2970

October 24, 2025

McCoy's Creek Channel Improvements

Disposal of Undisclosed Debris

Carl Padgett
GAI Consultants
12574 Flagler Center Blvd
Suite 202
Jacksonville, FL 32258

Project Name: McCoy's Creek Channel Improvements
County: Duval
COJ Contract #: 70646-23
Re: Disposal of Undisclosed Debris
Dear Mr. Padgett:

During the excavation within the proposed channel, JBCCI encountered a large amount of undisclosed debris. Due to the location that it was found, this debris had to be removed and transported to Trail Ridge Landfill per the specifications. This debris was not anticipated nor shown on the project drawings. JBCCI had to remove the material, stockpile, condense and load the material into trucks. The total cost for this unforeseen scope of work is $102,308.68.

If you have any questions, please do not hesitate to contact me.

Respectfully,

**J. B. COXWELL CONTRACTING, INC.**

Garrett Harrison
Director of Structures

Docusign Envelope ID: F54DB230-A150-452A-B3F0-14C4A48C193C

J. B. COXWELL CONTRACTING, INC.
6741 Lloyd Road West, Jacksonville, FL 32254-1249
Telephone (904) 786-1120 * Fax (904) 783-2970

**FORCE ACCOUNT**
**DAILY TIME REPORT**

NAME: Carl Padgett GAI Consultants
MAILING ADDRESS: 12574 Flagler Center Blvd Suite 202
CITY: Jacksonville, FL 32258

Date: June 9, 2025
Our Job No.: 2335
Location: Mccoy's Creek Channel Improvements

Load/Transport/Disposal of Contaminated Debris within Section 2 and 3

Idle Equipment Rate Charged at 50% Blue Book Value

## LABOR

| EMP. NO. | | EMPLOYEE'S NAME | OCCUPATION | HOURS | RATE | AMOUNT |
|---|---|---|---|---|---|---|
| 1 | | William Oecid | Foreman | 10.0 | $ 31.00 | $ 310.00 |
| 2 | | Daniel Suarez | Laborer | 10.0 | $ 18.00 | $ 180.00 |
| 3 | | Andy Gutierrez | Operator | 10.0 | $ 23.00 | $ 230.00 |
| 4 | | Jammon Sanders | Operator | 10.0 | $ 25.00 | $ 250.00 |
| 5 | | | | | | $ - |
| 6 | | | | | | $ - |
| 7 | | | | | | $ - |
| 8 | | | | | | $ - |
| 9 | | | | | | $ - |
| 10 | | | | | | $ - |
| | | | | SUBTOTAL | | $ 970.00 |
| | | | | BURDEN (44.52%) | | $ 431.84 |
| | | | | JBCCI MU 15.0% | | $ 210.28 |
| | | | | LABOR TOTAL | | $ 1,612.12 |

## EQUIPMENT

| EQUIP. NO. | | TYPE OF EQUIPMENT | HOURS | RATE | AMOUNT |
|---|---|---|---|---|---|
| 1 | | 336 Excavator | 10.0 | $ 113.84 | $ 1,138.40 |
| 2 | | Hydraulic Breaker for 323 | 10.0 | $ 28.61 | $ 286.10 |
| 3 | | 323 Excavator | 10.0 | $ 133.37 | $ 1,333.70 |
| 4 | | 938 Front End Loader | 10.0 | $ 62.19 | $ 621.90 |
| 5 | | Ford F-350 | 10.0 | $ 31.44 | $ 314.40 |
| 6 | | | | | $ - |
| 7 | | | | | $ - |
| 8 | | | | | $ - |
| | | | | | |
| | | | | EQUIPMENT SUBTOTAL | $ 3,694.50 |
| | | | | JBCCI MU 15.0% | $ 554.18 |
| | | | | EQUIPMENT TOTAL | $ 4,248.68 |

## MATERIALS

| | DESCRIPTION | QUANTITY | UNIT | PRICE | AMOUNT |
|---|---|---|---|---|---|
| 1 | | | | | $ - |
| 2 | | | | | $ - |
| 3 | | | | | $ - |
| 4 | | | | | $ - |
| 5 | | | | | $ - |
| | | | | MATERIALS SUBTOTAL | $ - |
| | | | | Sales Tax (7.5%) | $ - |
| | | | | MATERIALS Mark Up (15.0%) | $ - |
| | | | | MATERIALS TOTAL | $ - |

## SUBCONTRACTORS

| | DESCRIPTION | QUANTITY | UNIT | PRICE | AMOUNT |
|---|---|---|---|---|---|
| 1 | | | | | $ - |
| | | | | | $ - |
| | | | | SUBCONTRACTS SUBTOTAL | $ - |
| | | | | SUBCONTRACTS MU (10%) | $ - |
| | | | | SUBCONTRACTS TOTAL | $ - |

**DESCRIPTION OF WORK:** Load/Transport/Disposal of Contaminated Debris within Section 2 and 3

| | | |
|---|---|---|
| SUBTOTAL | $ | 5,860.80 |
| 0.53% Bond | $ | 31.06 |
| **GRAND TOTAL** | **$** | **5,891.86** |

Report Submitted by: _____

Docusign Envelope ID: F54DB230-A150-452A-B3F0-14C4A48C193C

J. B. COXWELL CONTRACTING, INC.
6741 Lloyd Road West, Jacksonville, FL 32254-1249
Telephone (904) 786-1120 * Fax (904) 783-2970

**FORCE ACCOUNT**
**DAILY TIME REPORT**

NAME: Carl Padgett GAI Consultants
MAILING ADDRESS: 12574 Flagler Center Blvd Suite 202
CITY: Jacksonville, FL 32258

Date: June 10, 2025
Our Job No.: 2336
Location: Mccoy's Creek Channel Improvements

Load/Transport/Disposal of Contaminated Debris within Section 2 and 3

Idle Equipment Rate Charged at 50% Blue Book Value

## LABOR

| EMP. NO. | | EMPLOYEE'S NAME | OCCUPATION | HOURS | RATE | AMOUNT |
|---|---|---|---|---|---|---|
| 1 | | William Decid | Foreman | 10.0 | $ 31.00 | $ 310.00 |
| 2 | | Daniel Suarez | Laborer | 10.0 | $ 18.00 | $ 180.00 |
| 3 | | Andy Gutierrez | Operator | 10.0 | $ 23.00 | $ 230.00 |
| 4 | | Jammon Sanders | Operator | 10.0 | $ 25.00 | $ 250.00 |
| 5 | | | | | | $ - |
| 6 | | | | | | $ - |
| 7 | | | | | | $ - |
| 8 | | | | | | $ - |
| 9 | | | | | | $ - |
| 10 | | | | | | $ - |
| | | | | SUBTOTAL | | $ 970.00 |
| | | | | BURDEN (44.52%) | | $ 431.84 |
| | | | | JBCCI MU 15.0% | | $ 210.28 |
| | | | | LABOR TOTAL | | $ 1,612.12 |

## EQUIPMENT

| EQUIP. NO. | | TYPE OF EQUIPMENT | HOURS | RATE | AMOUNT |
|---|---|---|---|---|---|
| 1 | | 336 Excavator | 10.0 | $ 113.84 | $ 1,138.40 |
| 2 | | Hydraulic Breaker for 323 | 10.0 | $ 28.61 | $ 286.10 |
| 3 | | 323 Excavator | 10.0 | $ 133.37 | $ 1,333.70 |
| 4 | | 936 Front End Loader | 10.0 | $ 62.19 | $ 621.90 |
| 5 | | Ford F-350 | 10.0 | $ 31.44 | $ 314.40 |
| 6 | | | | | $ - |
| 7 | | | | | $ - |
| 8 | | | | | $ - |
| | | | | | |
| | | | EQUIPMENT SUBTOTAL | | $ 3,694.50 |
| | | | JBCCI MU 15.0% | | $ 554.18 |
| | | | EQUIPMENT TOTAL | | $ 4,248.68 |

## MATERIALS

| | DESCRIPTION | QUANTITY | UNIT | PRICE | AMOUNT |
|---|---|---|---|---|---|
| 1 | | | | | $ - |
| 2 | | | | | $ - |
| 3 | | | | | $ - |
| 4 | | | | | $ - |
| 5 | | | | | $ - |
| | | | MATERIALS SUBTOTAL | | $ - |
| | | | Sales Tax (7.5%) | | $ - |
| | | | MATERIALS Mark Up (15.0%) | | $ - |
| | | | MATERIALS TOTAL | | $ - |

## SUBCONTRACTORS

| | DESCRIPTION | QUANTITY | UNIT | PRICE | AMOUNT |
|---|---|---|---|---|---|
| 1 | | | | | $ - |
| | | | | | $ - |
| | | | SUBCONTRACTS SUBTOTAL | | $ - |
| | | | SUBCONTRACTS MU (10%) | | $ - |
| | | | SUBCONTRACTS TOTAL | | $ - |

**DESCRIPTION OF WORK:** Load/Transport/Disposal of Contaminated Debris within Section 2 and 3

| | | |
|---|---|---|
| SUBTOTAL | $ | 5,860.80 |
| 0.53% Bond | $ | 31.06 |
| **GRAND TOTAL** | **$** | **5,891.86** |

Report Submitted by:

Docusign Envelope ID: F54DB230-A150-452A-B3F0-14C4A48C193C

J. B. COXWELL CONTRACTING, INC.
6741 Lloyd Road West, Jacksonville, FL 32254-1249
Telephone (904) 786-1120 * Fax (904) 783-2970

**FORCE ACCOUNT**
**DAILY TIME REPORT**

NAME: Carl Padgett GAI Consultants
MAILING ADDRESS: 12574 Flagler Center Blvd Suite 202
CITY: Jacksonville, FL 32258

Date: June 11, 2025
Our Job No.: 2335
Location: Mccoy's Creek Channel Improvements

Load/Transport/Disposal of Contaminated Debris within Section 2 and 3

Idle Equipment Rate Charged at 50% Blue Book Value

## LABOR

| EMP. NO. | | EMPLOYEE'S NAME | OCCUPATION | HOURS | RATE | AMOUNT |
|---|---|---|---|---|---|---|
| 1 | | William Decid | Foreman | 10.0 | $ 31.00 | $ 310.00 |
| 2 | | Daniel Suarez | Laborer | 10.0 | $ 18.00 | $ 180.00 |
| 3 | | Andy Gutierrez | Operator | 10.0 | $ 23.00 | $ 230.00 |
| 4 | | Jammon Sanders | Operator | 10.0 | $ 25.00 | $ 250.00 |
| 5 | | | | | | $ - |
| 6 | | | | | | $ - |
| 7 | | | | | | $ - |
| 8 | | | | | | $ - |
| 9 | | | | | | $ - |
| 10 | | | | | | $ - |
| | | | | | SUBTOTAL | $ 970.00 |
| | | | | | BURDEN (44.52%) | $ 431.84 |
| | | | | | JBCCI MU 15.0% | $ 210.28 |
| | | | | | LABOR TOTAL | $ 1,612.12 |

## EQUIPMENT

| EQUIP. NO. | | TYPE OF EQUIPMENT | HOURS | RATE | AMOUNT |
|---|---|---|---|---|---|
| 1 | | 336 Excavator | 10.0 | $ 113.84 | $ 1,138.40 |
| 2 | | Hydraulic Breaker for 323 | 10.0 | $ 28.61 | $ 286.10 |
| 3 | | 323 Excavator | 10.0 | $ 133.37 | $ 1,333.70 |
| 4 | | 938 Front End Loader | 10.0 | $ 62.19 | $ 621.90 |
| 5 | | Ford F-350 | 10.0 | $ 31.44 | $ 314.40 |
| 6 | | | | | $ - |
| 7 | | | | | $ - |
| 8 | | | | | $ - |
| | | | | | |
| | | | | EQUIPMENT SUBTOTAL | $ 3,694.50 |
| | | | | JBCCI MU 15.0% | $ 554.18 |
| | | | | EQUIPMENT TOTAL | $ 4,248.68 |

## MATERIALS

| | DESCRIPTION | QUANTITY | UNIT | PRICE | AMOUNT |
|---|---|---|---|---|---|
| 1 | | | | | $ - |
| 2 | | | | | $ - |
| 3 | | | | | $ - |
| 4 | | | | | $ - |
| 5 | | | | | $ - |
| | | | | MATERIALS SUBTOTAL | $ - |
| | | | | Sales Tax (7.5%) | $ - |
| | | | | MATERIALS Mark Up (15.0%) | $ - |
| | | | | MATERIALS TOTAL | $ - |

## SUBCONTRACTORS

| | DESCRIPTION | QUANTITY | UNIT | PRICE | AMOUNT |
|---|---|---|---|---|---|
| 1 | | | | | $ - |
| | | | | | $ - |
| | | | | SUBCONTRACTS SUBTOTAL | $ - |
| | | | | SUBCONTRACTS MU (10%) | $ - |
| | | | | SUBCONTRACTS TOTAL | $ - |

**DESCRIPTION OF WORK:** Load/Transport/Disposal of Contaminated Debris within Section 2 and 3

| | | |
|---|---|---|
| SUBTOTAL | $ | 5,860.80 |
| 0.53% Bond | $ | 31.06 |
| **GRAND TOTAL** | **$** | **5,891.86** |

Report Submitted by:

Docusign Envelope ID: F54DB230-A150-452A-B3F0-14C4A48C193C

J. B. COXWELL CONTRACTING, INC.
6741 Lloyd Road West, Jacksonville, FL 32254-1249
Telephone (904) 786-1120 * Fax (904) 783-2970

**FORCE ACCOUNT**
**DAILY TIME REPORT**

NAME: Carl Padgett GAI Consultants
MAILING ADDRESS: 12574 Flagler Center Blvd Suite 202
CITY: Jacksonville, FL 32258

Date: June 12, 2025
Our Job No.: 2335
Location: Mccoy's Creek Channel Improvements

Load/Transport/Disposal of Contaminated Debris within Section 2 and 3

Idle Equipment Rate Charged at 50% Blue Book Value

## LABOR

| EMP. NO. | | EMPLOYEE'S NAME | OCCUPATION | HOURS | RATE | AMOUNT |
|---|---|---|---|---|---|---|
| 1 | | William Decid | Foreman | 10.0 | $ 31.00 | $ 310.00 |
| 2 | | Daniel Suarez | Laborer | 10.0 | $ 18.00 | $ 180.00 |
| 3 | | Andy Gutierrez | Operator | 10.0 | $ 23.00 | $ 230.00 |
| 4 | | Jammon Sanders | Operator | 10.0 | $ 25.00 | $ 250.00 |
| 5 | | | | | | $ - |
| 6 | | | | | | $ - |
| 7 | | | | | | $ - |
| 8 | | | | | | $ - |
| 9 | | | | | | $ - |
| 10 | | | | | | $ - |
| | | | | | SUBTOTAL | $ 970.00 |
| | | | | | BURDEN (44.52%) | $ 431.84 |
| | | | | | JBCCI MU 15.0% | $ 210.28 |
| | | | | | LABOR TOTAL | $ 1,612.12 |

## EQUIPMENT

| EQUIP. NO. | | TYPE OF EQUIPMENT | HOURS | RATE | AMOUNT |
|---|---|---|---|---|---|
| 1 | | 336 Excavator | 10.0 | $ 113.84 | $ 1,138.40 |
| 2 | | Hydraulic Breaker for 323 | 10.0 | $ 28.61 | $ 286.10 |
| 3 | | 323 Excavator | 10.0 | $ 133.37 | $ 1,333.70 |
| 4 | | 938 Front End Loader | 10.0 | $ 62.19 | $ 621.90 |
| 5 | | Ford F-350 | 10.0 | $ 31.44 | $ 314.40 |
| 6 | | | | | $ - |
| 7 | | | | | $ - |
| 8 | | | | | $ - |
| | | | | | |
| | | | | EQUIPMENT SUBTOTAL | $ 3,694.50 |
| | | | | JBCCI MU 15.0% | $ 554.18 |
| | | | | EQUIPMENT TOTAL | $ 4,248.68 |

## MATERIALS

| | DESCRIPTION | QUANTITY | UNIT | PRICE | AMOUNT |
|---|---|---|---|---|---|
| 1 | | | | | $ - |
| 2 | | | | | $ - |
| 3 | | | | | $ - |
| 4 | | | | | $ - |
| 5 | | | | | $ - |
| | | | | MATERIALS SUBTOTAL | $ - |
| | | | | Sales Tax (7.6%) | $ - |
| | | | | MATERIALS Mark Up (15.0%) | $ - |
| | | | | MATERIALS TOTAL | $ - |

## SUBCONTRACTORS

| | DESCRIPTION | QUANTITY | UNIT | PRICE | AMOUNT |
|---|---|---|---|---|---|
| 1 | | | | | $ - |
| | | | | | $ - |
| | | | | SUBCONTRACTS SUBTOTAL | $ - |
| | | | | SUBCONTRACTS MU (10%) | $ - |
| | | | | SUBCONTRACTS TOTAL | $ - |

DESCRIPTION OF WORK: Load/Transport/Disposal of Contaminated Debris within Section 2 and 3

| | | |
|---|---|---|
| SUBTOTAL | $ | 5,860.80 |
| 0.53% Bond | $ | 31.06 |
| **GRAND TOTAL** | **$** | **5,891.86** |

Report Submitted by: _____

Jacksonville
Where Florida Begins.

# INVOICE

CITY OF JACKSONVILLE, FLORIDA

**GENERAL ACCOUNTING DIVISION**

INVOICE NUMBER: ARDO25011181

**BILL TO**

**J. B. COXWELL CONTRACTING, INC**
**6741 LLOYD RD WEST**
**JACKSONVILLE, FL 32254**

REQUESTS FOR TICKET CORRECTIONS MUST BE SUBMITTED WITHIN 30 DAYS OF INVOICE DATE

| | |
|---|---|
| INVOICE NUMBER | ARDO25011181 |
| REFERENCE NUMBER | 11,181 |
| CLOSING DATE | 06/30/2025 |
| CUSTOMER NUMBER | 16756-17267 |
| AMOUNT ENCLOSED | |

**RETURN THIS PORTION OF INVOICE WITH PAYMENT**
FOLD ON THE LINE BELOW

To pay online with a credit card, debit card or e-check, visit: <https://fps.coj.net>

**TAX COLLECTOR'S USE ONLY:**
SOLID WASTE DISPOSAL

| Ticket / Check # | Date | Description | Weight in Pounds | Amount |
|---|---|---|---|---|
| 2087410 | 06/09/2025 | 7-Special Waste | 33,054 | $684.71 |
| 2087455 | 06/09/2025 | 7-Special Waste | 28,280 | $585.82 |
| 2087457 | 06/09/2025 | 7-Special Waste | 25,920 | $536.93 |
| 2087465 | 06/09/2025 | 7-Special Waste | 23,820 | $493.43 |
| 2087560 | 06/09/2025 | 7-Special Waste | 36,094 | $747.69 |
| 2087581 | 06/09/2025 | 7-Special Waste | 40,080 | $830.26 |
| 2087597 | 06/09/2025 | 7-Special Waste | 39,400 | $816.17 |
| 2087610 | 06/09/2025 | 7-Special Waste | 39,060 | $809.13 |
| 2087764 | 06/09/2025 | 7-Special Waste | 32,154 | $666.07 |
| 2087772 | 06/09/2025 | 7-Special Waste | 38,960 | $807.06 |
| 2087804 | 06/09/2025 | 7-Special Waste | 33,020 | $684.01 |
| 2087850 | 06/09/2025 | 7-Special Waste | 39,880 | $826.11 |
| 2087926 | 06/09/2025 | 7-Special Waste | 40,980 | $848.90 |
| 2088065 | 06/10/2025 | 7-Special Waste | 41,607 | $861.89 |
| 2088074 | 06/10/2025 | 7-Special Waste | 40,174 | $832.20 |
| 2088077 | 06/10/2025 | 7-Special Waste | 33,320 | $690.22 |
| 2088085 | 06/10/2025 | 7-Special Waste | 39,907 | $826.67 |
| 2088152 | 06/10/2025 | 7-Special Waste | 43,280 | $896.55 |
| 2088171 | 06/10/2025 | 7-Special Waste | 39,294 | $813.98 |
| 2088178 | 06/10/2025 | 7-Special Waste | 45,907 | $950.96 |
| 2088184 | 06/10/2025 | 7-Special Waste | 40,547 | $839.93 |
| 2088245 | 06/10/2025 | 7-Special Waste | 41,100 | $851.39 |
| 2088257 | 06/10/2025 | 7-Special Waste | 44,814 | $928.32 |
| 2088261 | 06/10/2025 | 7-Special Waste | 44,887 | $929.83 |
| 2088267 | 06/10/2025 | 7-Special Waste | 44,827 | $928.59 |
| 2088407 | 06/10/2025 | 7-Special Waste | 41,700 | $863.82 |
| 2088412 | 06/10/2025 | 7-Special Waste | 33,107 | $685.81 |
| 2088425 | 06/10/2025 | 7-Special Waste | 33,474 | $693.41 |
| 2088480 | 06/10/2025 | 7-Special Waste | 34,987 | $724.76 |
| 2088530 | 06/10/2025 | 7-Special Waste | 28,160 | $583.33 |
| 2088539 | 06/10/2025 | 7-Special Waste | 33,707 | $698.24 |
| 2088548 | 06/10/2025 | 7-Special Waste | 34,194 | $708.33 |
| 2088734 | 06/11/2025 | 7-Special Waste | 32,620 | $675.72 |

Jacksonville
Where Florida Begins.

# INVOICE

CITY OF JACKSONVILLE, FLORIDA

**GENERAL ACCOUNTING DIVISION**

INVOICE NUMBER: ARDO25011181

**BILL TO**

**J. B. COXWELL CONTRACTING, INC**
**6741 LLOYD RD WEST**
**JACKSONVILLE, FL 32254**

REQUESTS FOR TICKET CORRECTIONS MUST BE SUBMITTED WITHIN 30 DAYS OF INVOICE DATE

| | |
|---|---|
| INVOICE NUMBER | ARDO25011181 |
| REFERENCE NUMBER | 11,181 |
| CLOSING DATE | 06/30/2025 |
| CUSTOMER NUMBER | 16756-17267 |
| AMOUNT ENCLOSED | |

**RETURN THIS PORTION OF INVOICE WITH PAYMENT**
FOLD ON THE LINE BELOW

**TAX COLLECTOR'S USE ONLY:**
SOLID WASTE DISPOSAL

To pay online with a credit card, debit card or e-check, visit: <https://fips.coj.net>

| Ticket / Check # | Date | Description | Weight in Pounds | Amount |
|---|---|---|---|---|
| 2088737 | 06/11/2025 | 7-Special Waste | 33,087 | $685.40 |
| 2088739 | 06/11/2025 | 7-Special Waste | 31,680 | $656.25 |
| 2088742 | 06/11/2025 | 7-Special Waste | 34,080 | $705.97 |
| 2088786 | 06/11/2025 | 7-Special Waste | 38,027 | $787.73 |
| 2088798 | 06/11/2025 | 7-Special Waste | 31,494 | $652.40 |
| 2088804 | 06/11/2025 | 7-Special Waste | 37,380 | $774.33 |
| 2088811 | 06/11/2025 | 7-Special Waste | 36,280 | $751.54 |
| 2088813 | 06/11/2025 | 7-Special Waste | 35,687 | $739.26 |
| 2088823 | 06/11/2025 | 7-Special Waste | 33,900 | $702.24 |
| 2088872 | 06/11/2025 | 7-Special Waste | 44,287 | $917.41 |
| 2088890 | 06/11/2025 | 7-Special Waste | 36,040 | $746.57 |
| 2088905 | 06/11/2025 | 7-Special Waste | 34,927 | $723.51 |
| 2088912 | 06/11/2025 | 7-Special Waste | 38,540 | $798.36 |
| 2088919 | 06/11/2025 | 7-Special Waste | 33,294 | $689.69 |
| 2088939 | 06/11/2025 | 7-Special Waste | 37,260 | $771.84 |
| 2088996 | 06/11/2025 | 7-Special Waste | 39,087 | $809.69 |
| 2089021 | 06/11/2025 | 7-Special Waste | 37,080 | $768.11 |
| 2089035 | 06/11/2025 | 7-Special Waste | 32,867 | $680.84 |
| 2089052 | 06/11/2025 | 7-Special Waste | 34,654 | $717.86 |
| 2089063 | 06/11/2025 | 7-Special Waste | 42,660 | $883.70 |
| 2089065 | 06/11/2025 | 7-Special Waste | 37,040 | $767.28 |
| 2089152 | 06/11/2025 | 7-Special Waste | 36,187 | $749.61 |
| 2089180 | 06/11/2025 | 7-Special Waste | 38,300 | $793.38 |
| 2089190 | 06/11/2025 | 7-Special Waste | 39,434 | $816.88 |
| 2089192 | 06/11/2025 | 7-Special Waste | 36,100 | $747.81 |
| 2089201 | 06/11/2025 | 7-Special Waste | 37,820 | $783.44 |
| 2089350 | 06/12/2025 | 7-Special Waste | 35,727 | $740.08 |
| 2089354 | 06/12/2025 | 7-Special Waste | 34,880 | $722.54 |
| 2089355 | 06/12/2025 | 7-Special Waste | 30,480 | $631.39 |
| 2089361 | 06/12/2025 | 7-Special Waste | 33,974 | $703.77 |
| 2089368 | 06/12/2025 | 7-Special Waste | 35,007 | $725.17 |
| 2089369 | 06/12/2025 | 7-Special Waste | 36,687 | $759.97 |
| 2089375 | 06/12/2025 | 7-Special Waste | 34,460 | $713.84 |

Jacksonville
Where Florida Begins.

# INVOICE

CITY OF JACKSONVILLE, FLORIDA

**GENERAL ACCOUNTING DIVISION**

INVOICE NUMBER: ARDO25011181

**BILL TO**

**J. B. COXWELL CONTRACTING, INC**
**6741 LLOYD RD WEST**
**JACKSONVILLE, FL 32254**

| | |
|---|---|
| INVOICE NUMBER | ARDO25011181 |
| REFERENCE NUMBER | 11,181 |
| CLOSING DATE | 06/30/2025 |
| CUSTOMER NUMBER | 16756-17267 |
| AMOUNT ENCLOSED | |

REQUESTS FOR TICKET CORRECTIONS MUST BE SUBMITTED WITHIN 30 DAYS OF INVOICE DATE

**RETURN THIS PORTION OF INVOICE WITH PAYMENT**
FOLD ON THE LINE BELOW

**TAX COLLECTOR'S USE ONLY:**
SOLID WASTE DISPOSAL

To pay online with a credit card, debit card or e-check, visit: <https://fps.coj.net>

| Ticket / Check # | Date | Description | Weight in Pounds | Amount |
|---|---|---|---|---|
| 2089388 | 06/12/2025 | 7-Special Waste | 34,400 | $712.60 |
| 2089429 | 06/12/2025 | 7-Special Waste | 39,267 | $813.42 |
| 2089431 | 06/12/2025 | 7-Special Waste | 37,900 | $785.10 |
| 2089433 | 06/12/2025 | 7-Special Waste | 36,300 | $751.95 |
| 2089439 | 06/12/2025 | 7-Special Waste | 40,334 | $835.52 |
| 2089444 | 06/12/2025 | 7-Special Waste | 40,107 | $830.82 |
| 2089449 | 06/12/2025 | 7-Special Waste | 37,867 | $784.41 |
| 2089452 | 06/12/2025 | 7-Special Waste | 40,020 | $829.01 |
| 2089474 | 06/12/2025 | 7-Special Waste | 40,640 | $841.86 |
| 2089500 | 06/12/2025 | 7-Special Waste | 38,947 | $806.79 |
| 2089506 | 06/12/2025 | 7-Special Waste | 38,200 | $791.31 |
| 2089508 | 06/12/2025 | 7-Special Waste | 40,920 | $847.66 |
| 2089511 | 06/12/2025 | 7-Special Waste | 37,914 | $785.39 |
| 2089519 | 06/12/2025 | 7-Special Waste | 42,987 | $890.48 |
| 2089533 | 06/12/2025 | 7-Special Waste | 39,507 | $818.39 |
| 2089536 | 06/12/2025 | 7-Special Waste | 37,860 | $784.27 |
| 2089577 | 06/12/2025 | 7-Special Waste | 40,340 | $835.64 |
| 2089585 | 06/12/2025 | 7-Special Waste | 39,540 | $819.07 |
| 2089586 | 06/12/2025 | 7-Special Waste | 38,407 | $795.60 |
| 2089650 | 06/12/2025 | 7-Special Waste | 37,780 | $782.61 |
| 2089658 | 06/12/2025 | 7-Special Waste | 41,467 | $858.99 |
| 2089659 | 06/12/2025 | 7-Special Waste | 35,894 | $743.54 |
| 2089670 | 06/12/2025 | 7-Special Waste | 38,547 | $798.50 |
| 2089706 | 06/12/2025 | 7-Special Waste | 41,840 | $866.72 |
| 2089727 | 06/12/2025 | 7-Special Waste | 45,760 | $947.92 |
| 2089731 | 06/12/2025 | 7-Special Waste | 39,280 | $813.69 |
| 2089794 | 06/12/2025 | 7-Special Waste | 44,280 | $917.26 |
| 2089802 | 06/12/2025 | 7-Special Waste | 37,194 | $770.47 |
| 2089806 | 06/12/2025 | 7-Special Waste | 42,927 | $889.23 |
| 2089815 | 06/12/2025 | 7-Special Waste | 38,007 | $787.32 |
| 2089971 | 06/13/2025 | 7-Special Waste | 43,767 | $906.63 |
| 2089979 | 06/13/2025 | 7-Special Waste | 39,827 | $825.02 |
| 2089986 | 06/13/2025 | 7-Special Waste | 33,134 | $686.37 |

Jacksonville
Where Florida Begins.

# INVOICE

CITY OF JACKSONVILLE, FLORIDA

**GENERAL ACCOUNTING DIVISION**

INVOICE NUMBER: ARDO25011181

**BILL TO**

**J. B. COXWELL CONTRACTING, INC**
**6741 LLOYD RD WEST**
**JACKSONVILLE, FL 32254**

REQUESTS FOR TICKET CORRECTIONS MUST BE SUBMITTED WITHIN 30 DAYS OF INVOICE DATE

| | |
|---|---|
| INVOICE NUMBER | ARDO25011181 |
| REFERENCE NUMBER | 11,181 |
| CLOSING DATE | 06/30/2025 |
| CUSTOMER NUMBER | 16756-17267 |
| AMOUNT ENCLOSED | |

**RETURN THIS PORTION OF INVOICE WITH PAYMENT**
FOLD ON THE LINE BELOW

To pay online with a credit card, debit card or e-check, visit: <https://fips.coj.net>

**TAX COLLECTOR'S USE ONLY:**
SOLID WASTE DISPOSAL

| Ticket / Check # | Date | Description | Weight in Pounds | Amount |
|---|---|---|---|---|
| 2089997 | 06/13/2025 | 7-Special Waste | 48,000 | $994.32 |
| 2090065 | 06/13/2025 | 7-Special Waste | 41,287 | $855.26 |
| | | | **3,801,170** | **$78,741.24** |

**CREDIT**
GENERAL LEDGER ACCOUNT:
115000 115231

**PLEASE PAY THIS AMOUNT** **$78,741.24**

REMITTANCE ADDRESS:

TAX COLLECTOR
231 E. FORSYTH ST. ROOM 141
JACKSONVILLE, FLORIDA 32202

FOR INFORMATION REGARDING THIS INVOICE CALL 904.255.7500

EquipmentWatch.

www.equipmentwatch.com

# Rental Rate Blue Book®, O&O Rates Report for NPK M-38K in JBC Fleet

April 4, 2024

**NPK M-38K**
Hydraulic Shears

Size Class:
**25 - 30 in**
Weight:
**9370 lbs**

## Configuration for M-38K

| | | | |
|---|---|---|---|
| Jaw Opening | **30.2'** | Power Mode | **Hydraulic** |
| Type | **Shear** | | |

## Blue Book Rates

** FHWA Rate is equal to the monthly ownership cost divided by 176 plus the hourly estimated operating cost.

| | Ownership Costs | | | | Estimated Operating Costs | FHWA Rate** |
|---|---|---|---|---|---|---|
| | **Monthly** | **Weekly** | **Daily** | **Hourly** | **Hourly** | **Hourly** |
| Published Rates | USD $2,080.00 | USD $585.00 | USD $145.00 | USD $22.00 | USD $16.72 | USD $28.54 |
| **Adjustments** | | | | | | |
| Region ( Jacksonville, Florida: 100.6%) | USD $12.48 | USD $3.51 | USD $0.87 | USD $0.13 | | |
| Model Year (2023: 99.97%) | (USD $0.64) | (USD $0.18) | (USD $0.04) | (USD $0.01) | | |
| Adjusted Hourly Ownership Cost (100%) | - | - | - | - | | |
| Hourly Operating Cost (100%) | | | | | - | |
| **Total:** | **USD $2,091.84** | **USD $588.33** | **USD $145.83** | **USD $22.13** | **USD $16.72** | **USD $28.61** |

## Non-Active Use Rates

| | **Hourly** |
|---|---|
| Standby Rate | USD $6.18 |
| Idling Rate | USD $11.89 |

## Rate Element Allocation

| **Element** | **Percentage** | **Value** |
|---|---|---|
| Depreciation (ownership) | 25% | USD $520.00/mo |
| Overhaul (ownership) | 48% | USD $998.40/mo |
| CFC (ownership) | 12% | USD $249.60/mo |
| Indirect (ownership) | 15% | USD $312.00/mo |

Fuel cost data is not available for these rates.

Revised Date: 2nd quarter 2024

www.equipmentwatch.com

All material herein © 2003-2024 Randall-Reilly All rights reserved.

Docusign Envelope ID: F54DB230-A150-452A-B3F0-14C4A48C193C

EquipmentWatch.

www.equipmentwatch.com

# Rental Rate Blue Book®, O&O Rates Report for CAT 323 in JBC Fleet

January 24, 2024

**Caterpillar 323**
Crawler Mounted Hydraulic Excavators

Size Class:
**24.5 - 28.4 mt**
Weight:
**N/A**

## Configuration for 323

| | | | |
|---|---|---|---|
| Bucket Capacity | **1.8 cu yd** | Horsepower | **162 hp** |
| Operating Weight | **56200 lbs** | Power Mode | **Diesel** |

## Blue Book Rates

** FHWA Rate is equal to the monthly ownership cost divided by 176 plus the hourly estimated operating cost.

| | Ownership Costs | | | | Estimated Operating Costs | FHWA Rate** |
|---|---|---|---|---|---|---|
| | **Monthly** | **Weekly** | **Daily** | **Hourly** | **Hourly** | **Hourly** |
| Published Rates | USD $15,185.00 | USD $4,250.00 | USD $1,065.00 | USD $160.00 | USD $47.64 | USD $133.92 |
| **Adjustments** | | | | | | |
| Region ( Jacksonville, Florida: 99.4%) | (USD $91.11) | (USD $25.50) | (USD $6.39) | (USD $0.96) | | |
| Model Year (2023: 99.97%) | (USD $4.85) | (USD $1.36) | (USD $0.34) | (USD $0.05) | | |
| Adjusted Hourly Ownership Cost (100%) | - | - | - | - | | |
| Hourly Operating Cost (100%) | | | | | - | |
| **Total:** | **USD $15,089.04** | **USD $4,223.14** | **USD $1,058.27** | **USD $158.99** | **USD $47.64** | **USD $133.37** |

## Non-Active Use Rates

| | Hourly |
|---|---|
| Standby Rate | USD $47.15 |
| Idling Rate | USD $98.57 |

## Rate Element Allocation

| Element | Percentage | Value |
|---|---|---|
| Depreciation (ownership) | 30% | USD $4,555.50/mo |
| Overhaul (ownership) | 45% | USD $6,833.25/mo |
| CFC (ownership) | 15% | USD $2,277.75/mo |
| Indirect (ownership) | 10% | USD $1,518.50/mo |
| Fuel (operating) @ USD 4.15 | 26.95% | USD $12.84/hr |

Revised Date: 1st quarter 2024

www.equipmentwatch.com

All material herein © 2003-2024 Randall-Reilly All rights reserved.

Docusign Envelope ID: F54DB230-A150-452A-B3F0-14C4A48C193C

EquipmentWatch.

www.equipmentwatch.com

# Rental Rate Blue Book®, O&O Rates Report for CAT 336E L in JBC Fleet

April 4, 2024

**Caterpillar 336E L (disc. 2017)**
Crawler Mounted Hydraulic Excavators

Size Class:
**33.5 - 40.4 mt**
Weight:
**80620 lbs**

## Configuration for 336E L (disc. 2017)

| | | | |
|---|---|---|---|
| Horsepower | **291.0 hp** | Operating Weight | **36.6 mt** |
| Power Mode | **Diesel** | | |

## Blue Book Rates

** FHWA Rate is equal to the monthly ownership cost divided by 176 plus the hourly estimated operating cost.

| | Ownership Costs | | | | Estimated Operating Costs | FHWA Rate** |
|---|---|---|---|---|---|---|
| | **Monthly** | **Weekly** | **Daily** | **Hourly** | **Hourly** | **Hourly** |
| Published Rates | USD $11,255.00 | USD $3,150.00 | USD $790.00 | USD $120.00 | USD $50.27 | USD $114.22 |
| **Adjustments** | | | | | | |
| Region ( Jacksonville, Florida: 99.4%) | (USD $67.53) | (USD $18.90) | (USD $4.74) | (USD $0.72) | | |
| Model Year (2017: 100%) | - | - | - | - | | |
| Adjusted Hourly Ownership Cost (100%) | - | - | - | - | | |
| Hourly Operating Cost (100%) | | | | | - | |
| **Total:** | **USD $11,187.47** | **USD $3,131.10** | **USD $785.26** | **USD $119.28** | **USD $50.27** | **USD $113.84** |

## Non-Active Use Rates

| | Hourly |
|---|---|
| Standby Rate | USD $38.77 |
| Idling Rate | USD $85.84 |

## Rate Element Allocation

| Element | Percentage | Value |
|---|---|---|
| Depreciation (ownership) | 33% | USD $3,714.15/mo |
| Overhaul (ownership) | 39% | USD $4,389.45/mo |
| CFC (ownership) | 17% | USD $1,913.35/mo |
| Indirect (ownership) | 11% | USD $1,238.05/mo |
| Fuel (operating) @ USD 4.03 | 44.3% | USD $22.27/hr |

Revised Date: 2nd quarter 2024

www.equipmentwatch.com

All material herein © 2003-2024 Randall-Reilly All rights reserved.

Docusign Envelope ID: F54DB230-A150-452A-B3F0-14C4A48C193C

EquipmentWatch.

www.equipmentwatch.com

# Rental Rate Blue Book®, O&O Rates Report for Ford F-350 Pipe Truck in JBC Fleet

April 4, 2024

**Ford F-350 SD**
On-Highway Light Duty Trucks

Size Class:
**300 hp & Over**
Weight:
**N/A**

## Configuration for F-350 SD

| | | | |
|---|---|---|---|
| Axle Configuration | **4.0 X 2.0** | Cab Type | **Crew** |
| Horsepower | **362.0 hp** | Power Mode | **Gasoline** |
| Ton Rating | **1.0** | | |

## Blue Book Rates

** FHWA Rate is equal to the monthly ownership cost divided by 176 plus the hourly estimated operating cost.

| | Ownership Costs | | | | Estimated Operating Costs | FHWA Rate** |
|---|---|---|---|---|---|---|
| | **Monthly** | **Weekly** | **Daily** | **Hourly** | **Hourly** | **Hourly** |
| Published Rates | USD $580.00 | USD $165.00 | USD $41.00 | USD $6.00 | USD $28.14 | USD $31.44 |
| **Adjustments** | | | | | | |
| Region ( Jacksonville, Florida: 100.2%) | USD $1.16 | USD $0.33 | USD $0.08 | USD $0.01 | | |
| Model Year (2023: 99.97%) | (USD $0.16) | (USD $0.05) | (USD $0.01) | (USD $0.00) | | |
| Adjusted Hourly Ownership Cost (100%) | - | - | - | - | | |
| Hourly Operating Cost (100%) | | | | | - | |
| **Total:** | **USD $581.00** | **USD $165.28** | **USD $41.07** | **USD $6.01** | **USD $28.14** | **USD $31.44** |

## Non-Active Use Rates

| | **Hourly** |
|---|---|
| Standby Rate | USD $2.18 |
| Idling Rate | USD $27.05 |

## Rate Element Allocation

| **Element** | **Percentage** | **Value** |
|---|---|---|
| Depreciation (ownership) | 35% | USD $203.00/mo |
| Overhaul (ownership) | 34% | USD $197.20/mo |
| CFC (ownership) | 13% | USD $75.40/mo |
| Indirect (ownership) | 18% | USD $104.40/mo |
| Fuel (operating) @ USD 3.45 | 84.4% | USD $23.75/hr |

Revised Date: 2nd quarter 2024

www.equipmentwatch.com

All material herein © 2003-2024 Randall-Reilly All rights reserved.

Docusign Envelope ID: F54DB230-A150-452A-B3F0-14C4A48C193C

EquipmentWatch.

www.equipmentwatch.com

January 24, 2024

## Rental Rate Blue Book®, O&O Rates Report for CAT 938H in JBC Fleet

**Caterpillar 938H (disc. 2012)**
4-Wd Articulated Wheel Loaders

Size Class:
175 - 199 hp
Weight:
33190 lbs

### Configuration for 938H (disc. 2012)

| | | | |
|---|---|---|---|
| Operator Protection | EROPS | Power Mode | Diesel |

### Blue Book Rates

** FHWA Rate is equal to the monthly ownership cost divided by 176 plus the hourly estimated operating cost.

| | Ownership Costs | | | | Estimated Operating Costs | FHWA Rate** |
|---|---|---|---|---|---|---|
| | Monthly | Weekly | Daily | Hourly | Hourly | Hourly |
| Published Rates | USD $5,485.00 | USD $1,335.00 | USD $335.00 | USD $58.00 | USD $31.06 | USD $62.22 |
| Adjustments | | | | | | |
| Region ( Jacksonville, Florida: 99.9%) | (USD $5.49) | (USD $1.53) | (USD $0.38) | (USD $0.06) | | |
| Model Year (2012: 100%) | - | - | - | - | | |
| Adjusted Hourly Ownership Cost (100%) | - | - | - | - | | |
| Hourly Operating Cost (100%) | | | | | | |
| Total: | USD $5,479.52 | USD $1,333.46 | USD $334.61 | USD $57.94 | USD $31.06 | USD $62.19 |

### Non-Active Use Rates

| | Hourly |
|---|---|
| Standby Rate | USD $21.17 |
| Idling Rate | USD $44.49 |

### Rate Element Allocation

| Element | Percentage | Value |
|---|---|---|
| Depreciation (ownership) | 39% | USD $2,139.15/mo |
| Overhaul (ownership) | 32% | USD $1,755.20/mo |
| CFC (ownership) | 18% | USD $987.30/mo |
| Indirect (ownership) | 11% | USD $603.35/mo |
| Fuel (operating) @ USD 4.15 | 42.72% | USD $13.27/hr |

Revised Date: 1st quarter 2024

All material herein © 2003-2024 Randall-Reilly All rights reserved.

# CITY OF JACKSONVILLE
# CONTRACTOR'S DAILY REPORT

**CONTRACTOR:** J.B. Coxwell Inc. **Date:** 6.9.25

Superintendent: Jaime Vargas Weather: Sunny / Rain

Job Site: McCoy's Creek #2325 *Temp: A.M.* * P.M. *

Job Safety: Moving Equipment, Overhead Lift, Trench Safety, Heavy Lifting

| | |
|---|---|
| **Supr.** | 1 |
| **Foreman** | 1 |
| **Carpenter** | |
| **Pipe layer** | |
| **Tail man** | |
| **Hillman** | |
| **Finisher** | |
| **Welder** | |
| **Pile Driver** | |
| **Op. Loader** | |
| ***Op. TrackHoe*** | 1 |
| ***Survey*** | |
| ***Laborer*** | 2 |
| **OP. Crane** | |
| Dozer Oper. | |
| **Rod Busters** | |

Deficiencies/Delays

Comments: - Activated Bypass. 2/3/25

Work In Progress: Wilian Delcid crew loaded out contaminated soil from stock pile to trail ridge.

Wilian Delcid crew used 9 trucks. Loaded out 41 Loads to a total of 658.37 tons of Contaminated Soil.

Wilian Delcid crew used 4 trucks. Loaded out 13 Loads to a total of 150.06 tons. of Contaminated Debris

Inspector Comments:

Jaime Vargas

**CONTRACTOR** **INSPECTOR**

Docusign Envelope ID: F54DB230-A150-452A-B3F0-14C4A48C193C

# CITY OF JACKSONVILLE
# CONTRACTOR'S DAILY REPORT

**CONTRACTOR:** J.B. Coxwell Inc. **Date:** 6.10.25

Superintendent: Jaime Vargas Weather: Sunny / Rain

Job Site: McCoy's Creek #2325 *Temp: A.M.* * P.M. *

Job Safety: Moving Equipment, Overhead Lift, Trench Safety, Heavy Lifting

| | |
|---|---|
| **Supr.** | 1 |
| **Foreman** | 1 |
| **Carpenter** | |
| **Pipe layer** | |
| **Tail man** | |
| **Hillman** | |
| **Finisher** | |
| **Welder** | |
| **Pile Driver** | |
| **Op. Loader** | |
| ***Op. TrackHoe*** | 2 |
| ***Survey*** | |
| ***Laborer*** | 2 |
| **OP. Crane** | |
| Dozer Oper. | |
| **Rod Busters** | |

Deficiencies/Delays

Comments: - Activated Bypass. 2/3/25

Work In Progress: Wilian Delcid crew loaded out contaminated debris from stock pile to trail ridge.

Wilian Delcid crew used 5 trucks. Loaded out 19 Loads to a total of 369.48 tons. of Contaminated Debris

Wilian Delcid crew assisted on CSX job site.

Inspector Comments:

Jaime Vargas

**CONTRACTOR** **INSPECTOR**

# CITY OF JACKSONVILLE
# CONTRACTOR'S DAILY REPORT

**CONTRACTOR:** J.B. Coxwell Inc. **Date:** 6.11.25

Superintendent: Jaime Vargas Weather: Sunny / Rain

Job Site: McCoy's Creek #2325 *Temp: A.M.* * P.M. *

Job Safety: Moving Equipment, Overhead Lift, Trench Safety, Heavy Lifting

| | |
|---|---|
| **Supr.** | 1 |
| **Foreman** | 1 |
| **Carpenter** | |
| **Pipe layer** | |
| **Tail man** | |
| **Hillman** | |
| **Finisher** | |
| **Welder** | |
| **Pile Driver** | |
| **Op. Loader** | |
| ***Op. TrackHoe*** | 2 |
| ***Survey*** | |
| ***Laborer*** | 2 |
| **OP. Crane** | |
| Dozer Oper. | |
| **Rod Busters** | |

Deficiencies/Delays

Comments: - Activated Bypass. 2/3/25

Work In Progress: Wilian Delcid crew loaded out contaminated debris from stock pile to trail ridge.

Wilian Delcid crew used 6 trucks. Loaded out 29 Loads to a total of 505.43 tons. of Contaminated Debris

Wilian Delcid crew assisted on CSX job site.

Inspector Comments:

Jaime Vargas

**CONTRACTOR** **INSPECTOR**

# CITY OF JACKSONVILLE
# CONTRACTOR'S DAILY REPORT

**CONTRACTOR:** J.B. Coxwell Inc. **Date:** 6.12.25

Superintendent: Jaime Vargas Weather: Sunny / Rain

Job Site: McCoy's Creek #2325 *Temp: A.M.* * P.M. *

Job Safety: Moving Equipment, Overhead Lift, Trench Safety, Heavy Lifting

| | |
|---|---|
| **Supr.** | 1 |
| **Foreman** | 1 |
| **Carpenter** | |
| **Pipe layer** | |
| **Tail man** | |
| **Hillman** | |
| **Finisher** | |
| **Welder** | |
| **Pile Driver** | |
| **Op. Loader** | |
| ***Op. TrackHoe*** | 2 |
| ***Survey*** | |
| ***Laborer*** | 2 |
| **OP. Crane** | |
| Dozer Oper. | |
| **Rod Busters** | |

Deficiencies/Delays

Comments: - Activated Bypass. 2/3/25

Work In Progress: Wilian Delcid crew loaded out contaminated debris from stock pile to trail ridge.

Wilian Delcid crew used 8 trucks. Loaded out 38 Loads to a total of 709.18 tons. of Contaminated Debris

Wilian Delcid crew assisted on CSX job site.

Inspector Comments:

Jaime Vargas

**CONTRACTOR** **INSPECTOR**

Location of Debris

Docusign Envelope ID: F54DB230-A150-452A-B3F0-14C4A48C193C

# CHANGE ORDER REQUEST #28

# RIVERWALK PEDESTRIAN BRIDGE REBUILD

# MCCOY'S CREEK OUTFALL REALIGNMENT

# COJ CONTRACT NO.: 70646-23

# OCTOBER 27, 2025

Docusign Envelope ID: F54DB230-A150-452A-B3F0-14C4A48C193C

# GAI ENTITLEMENT ANALYSIS

# CHANGE ORDER REQUEST #28

# RIVERWALK PEDESTRIAN BRIDGE REBUILD

# MCCOY'S CREEK OUTFALL REALIGNMENT

# OCTOBER 27, 2025

Docusign Envelope ID: F54DB230-A150-452A-B3F0-14C4A48C193C

# Entitlement Analysis COR #28 - Reconstruction of RiverWalk Pedestrian Bridge

Job Description: McCoy's Creek Outfall Realignment
COJ Contract Number: 70646-23
October 27, 2025

## Entitlement Analysis

The City directed JBCCI to provide a proposal for the reconstruction of the McCoy's Creek Riverwalk Pedestrian Bridge. This scope of work was not included in the original McCoy's Creek Channel Improvement contract, nor was it accounted for in the bid documents, specifications, or original project pricing. In response to the City's request, JBCCI prepared and submitted a budgetary proposal in the amount of $1,961,236.00, based on the 30% design drawings dated November 2024. Because this work constitutes new and additional scope beyond the original contract requirements, JBCCI is entitled to treat the riverwalk reconstruction as a separate change order. JBCCI has incorporated all available design information and reasonable assumptions to establish a complete scope; however, final pricing will be subject to revision upon issuance of the 100% design by the Engineer of Record. Furthermore, the City has communicated that this work is a high-priority effort with an anticipated completion date of December 31, 2025. Meeting this schedule requires JBCCI to begin work prior to the completion of the Channel Improvement Project, utilizing the temporary trestle for access. This directive alters the established sequence of work and resource planning, further supporting JBCCI's entitlement to additional compensation and schedule adjustment. Based on the above, JBCCI is entitled to the full value of the proposed work, subject to final design issuance, as a change to the original contract.

## Impact Analysis

The directive to reconstruct the McCoy's Creek Riverwalk introduces new work elements that were not contemplated within the original contract scope. This added scope requires JBCCI to allocate labor, equipment, materials, and subcontractor resources beyond those planned for the Channel Improvement Project. Because the City intends for the riverwalk reconstruction to be completed by December 31, 2025, JBCCI must initiate the work prior to completion of the active channel construction. This overlap requires continued use of the temporary trestle to support access, equipment staging, and material delivery. Extending the trestle's use and coordinating concurrent work introduces sequencing constraints, production inefficiencies, and operational impacts not included in the original bid schedule. Additionally, the proposal is based on 30% design drawings, requiring JBCCI to make reasonable assumptions for reinforcing steel, electrical allowances, and concrete testing. Any refinements in the 100% design may result in additional adjustments to labor, materials, and production needs. These impacts demonstrate that the riverwalk reconstruction is a distinct scope element requiring separate compensation and schedule consideration.

## Summary of Cost Impacts

Docusign Envelope ID: F54DB230-A150-452A-B3F0-14C4A48C193C

**Description Amount**
Budgetary Proposal – Riverwalk Reconstruction
$1,961,236.00
Included Allowance – Electrical Conduit & Lighting
Included
Included QC Testing for Structural Concrete
Included
Assumed Reinforcing Steel (24,000 lbs.)
Included
Excluded – Compression Verification Testing
$75,000.00 (Not Included)
Excluded – Proof Tests $25,000.00 (Not Included)
Total Budgetary Price $1,961,236.00
*(Final pricing will be revised upon receipt of the 100% design by the EOR.)*

**Conclusion**

At the City's request, JBCCI has prepared and submitted a comprehensive budgetary proposal for the reconstruction of the McCoy's Creek Riverwalk in the amount of $1,961,236.00, based on the 30% design drawings. This work represents new and additional scope not included in the original contract and therefore qualifies as a change order under the McCoy's Creek Channel Improvement Project. JBCCI has incorporated all reasonably foreseeable components required to deliver a complete and functional riverwalk, acknowledging that final pricing will be contingent on the forthcoming 100% design. The City's directive to complete this work by December 31, 2025, and the need to begin work prior to completion of the existing project utilizing the temporary trestle, further supports JBCCI's entitlement to both cost and schedule adjustments. JBCCI remains committed to supporting the City's objectives and delivering this project safely, efficiently, and in accordance with the final approved design.

Docusign Envelope ID: F54DB230-A150-452A-B3F0-14C4A48C193C

# CONTRACTOR'S DOCUMENTATION

# CHANGE ORDER REQUEST #28

# RIVERWALK PEDESTRIAN BRIDGE REBUILD

# MCCOY'S CREEK OUTFALL REALIGNMENT

# OCTOBER 27, 2025

Docusign Envelope ID: F54DB230-A150-452A-B3F0-14C4A48C193C

**J.B. Coxwell Contracting, Inc.**
6741 Lloyd Road West
Jacksonville, Florida 32254
Office (904) 786-1120 Fax (904) 783-2970

October 24, 2025

McCoy's Creek Channel Improvements

Addition of Reconstruction of Pedestrian Riverwalk

Carl Padgett
GAI Consultants
12574 Flagler Center Blvd
Suite 202
Jacksonville, FL 32258

Project Name: McCoy's Creek Channel Improvements
County: Duval
COJ Contract #: 70646-23
Re: RFCO# 28
Addition of Reconstruction of Pedestrian Riverwalk

Dear Mr. Padgett:

Per the City's Direction, JBCCI provided a proposal to reconstruct the Pedestrian Riverwalk. The proposal was accepted and JBCCI has moved forward with design and acquisition of the materials. This scope of work was not part of the original contract and is being treated as a change order to the McCoy's Creek Channel Improvement project. The total budgetary price for the reconstruction of the Pedestrian Riverwalk is $1,961,236.00.

If you have any questions, please do not hesitate to contact me.

Respectfully,

**J. B. COXWELL CONTRACTING, INC.**

Garrett Harrison
Director of Structures


An Equal Opportunity Employer

Docusign Envelope ID: F54DB230-A150-452A-B3F0-14C4A48C193C

**J.B. Coxwell Contracting, Inc.**
6741 Lloyd Road West
Jacksonville, Florida 32254
Office (904) 786-1120 Fax (904) 783-2970

May 14, 2025

Project Name: McCoy's Creek
Riverwalk Reconstruction

Location: Jacksonville, FL

Dear Ms. Reed:

As requested, J.B. Coxwell is pleased to provide you with a budgetary proposal for the reconstruction of the riverwalk located at McCoy's Creek for $1,961,236.00.

Our proposal is strictly budgetary, and final pricing will be based on the 100% design by the EOR. JBCCI has tried to incorporate all necessary items to produce a complete scope as well as a successful project. JBCCI understands that this project is a high priority, and we will make every effort to meet the city's anticipated schedule of completion by December 31st, 2025.

***Inclusions/Assumptions***

- Budgetary Pricing is based on 30% plan submittal drawings dated November 2024
- JBC assumed a quantity of 24,000 lbs of reinforcing steel
- An allowance of $25,000 was included in our proposal for electrical conduit and lighting
- JBC has included QC testing for all structural concrete.
- This work shall commence prior to the completion of McCoy's Creek Channel Improvement project due to the use of the temporary trestle for the required equipment and materials.

***Exclusions***

- Permits
- Final Design
- Compression Verification Testing ($75,000.00)
- Proof Tests ($25,000.00)

Please let us know if you have any questions regarding the above budgetary proposal. We appreciate the opportunity and look forward to working with you.

Respectfully,
***J.B. Coxwell Contracting, Inc.***

Garrett Harrison,
Project Manager

Docusign Envelope ID: F54DB230-A150-452A-B3F0-14C4A48C193C

# RIVERWALK REBUILD PLANS

# CHANGE ORDER REQUEST #28

# RIVERWALK PEDESTRIAN BRIDGE REBUILD

# MCCOY'S CREEK OUTFALL REALIGNMENT

# OCTOBER 27, 2025

Docusign Envelope ID: F54DB230-A150-452A-B3F0-14C4A48C193C

# CITY OF JACKSONVILLE NOTES

## GENERAL

All construction shall be performed in accordance with the approved plans and comply with all standard city policies and practices. City approval is contingent upon any required state or federal permit approvals such as those from the Department of Environmental Protection or the St. Johns River Water Management District (SJRWMD).

## UTILITY WORK

Plan approval through Development Services does not include utilities. Proposed water, sewer or electric construction must be approved separately through the respective utility company. In most cases, this will be:

JEA
JEA Tower - 4th Floor
21 W. Church Street
Jacksonville, FL 32202
http://www.jea.com/business/services/developandbuild/developers.asp

## WORK WITHIN THE RIGHT-OF-WAY

CITY: Except for new subdivision infrastructure construction, all work performed within a City of Jacksonville right-of-way or easement requires a Right-of-way Permit. The contractor performing the proposed work must have a current Right-of-way Bond on file with Development Services. Right-of-way Permit applications are processed at:

Development Services Customer Service Counter
Edward Ball Building, 2nd Floor
214 N. Hogan St.
Jacksonville, FL 32202
(904) 255-8310
https://jacksonville.com/Home/Contact

STATE: All work performed within a state right-of-way requires a permit from the Florida Department of Transportation (FDOT). It is the developer's responsibility to obtain required FDOT permits or maintenance-of-traffic approvals for work within FDOT right-of-ways. The FDOT regional office can be contacted at (904) 360-5200 Any changes to the approved plans needed for FDOT approval must be submitted to Development Services as revisions.

Adjacent State Roads: _____

RAILROAD: Railroad companies may require special approvals or permits to work within their right-of-ways. It is the developer's responsibility to obtain permission from any railroad right-of-way owner before performing any work within their right-of-way.

## STORMWATER

Annual reports in compliance with the SJRWMD stormwater permits are required from the maintenance entity of all stormwater management facilities. Send copies of the reports to:

Engineering and Construction Management
Edward Ball Building, 10th Floor
214 N. Hogan St.
Jacksonville, FL 32202
https://www.jacksonville.gov/departments/public-works/engineering-and-construction-management.aspx

The owner of any project one (1) acre or larger is required to provide a Notice of Intent (NOI) in accordance with criteria set forth in the city's NPDES permit within 48 hours of beginning construction. Send NOI and NOI fee to:

Florida Department of Environmental Protection
PO Box 3070
Tallahassee Florida 32316
https://floridadep.gov/water/stormwater/content/construction-activity

The contractor shall contact the Environmental Quality Division, Erosion and Sedimentation Control Section (ESC) to provide verification that applicable stormwater permits have been obtained and to schedule a pre-construction ESC site inspection:

Environmental Quality Division
407 North Laura Street, Third Floor
Jacksonville, FL 32202
(904) 255-7522

## FIRE MARSHALL

Plan review and approval does not relieve the contractor of complying with all applicable State Fire Codes.

Underground mains and hydrants shall be installed, completed, and in service prior to construction work.

Underground contractor shall submit to the Fire Marshall for approval complete specs for all underground pipe and fittings relating to fire protection PRIOR to installation and inspection. Contractor shall include manufacturer's name and pipe ID along with contractor's state license number.

## LANDSCAPE

A Site Work Permit is required for this project.

- Tree Fund payment is due: _____ inches at $_____ = $_____
- Article 25 funds are due: _____ inches at $_____ = $_____

## TRAFFIC ENGINEERING

TRAFFIC SIGNS

Metro Name (each) _____

Standard (each) _____

Stop/Yield (each) _____

Design (per plat) 1 per plat

Installation (per hour) 1 per 2 signs (rounded up)

_____ Streetlights Required

NOTE: Traffic sign costs change from time to time. Consult Attachment 8 of the Land Development Procedures Manual (http://ldpm.jaxdev.com/) for the current rates before paying for any sign installations.

No lane closures allowed from 7 a.m. till 9 a.m. and from 4 p.m. till 6 p.m.

PROPOSED STRUCTURE PLANS FOR

# MODIFICATION OF NORTHBANK PEDESTRIAN BRIDGE OVER MCCOYS CREEK OUTFALL DUVAL COUNTY

## INDEX OF STRUCTURE PLANS


| SHEET NO. | SHEET DESCRIPTION |
|---|---|
| B-1 | KEY SHEET |
| B-2 | SIGNATURE SHEET |
| B-3 | GENERAL NOTES |
| B-4 | PLAN AND ELEVATION |
| B-5 | TYPICAL SECTIONS |
| B-6 | REPORT OF CORE BORINGS |
| B-7 | PROJECT CONTROL |
| B-8 | FOUNDATION LAYOUT |
| B-9 | PIER 1 - COLUMN 1 CAP |
| B-10 | PIER 1 - COLUMN 2 CAP |
| B-11 | PIER 2 - COLUMN 1 CAP |
| B-12 | PIER 2 - COLUMN 2 CAP |
| B-13 | PIER CAP DETAILS (1 OF 2) |
| B-14 | PIER CAP DETAILS (2 OF 2) |
| B-15 | COLUMN AND FOOTING DETAILS (1 OF 2) |
| B-16 | COLUMN AND FOOTING DETAILS (2 OF 2) |
| B-17 | FINISH GRADE ELEVATIONS |
| B-18 | SUPERSTRUCTURE PLAN |
| B-19 | SUPERSTRUCTURE SECTIONS |
| B-20 | SUPERSTRUCTURE DETAILS (1 OF 2) |
| B-21 | SUPERSTRUCTURE DETAILS (2 OF 2) |
| B-22 | AASHTO TYPE II BEAM - TABLE OF BEAM VARIABLES |
| B-23 | BEARING DETAILS |
| B-24 | REINFORCING BAR LIST (1 OF 2) |
| B-25 | REINFORCING BAR LIST (2 OF 2) |
| L-1 | LIGHTING DETAILS |


## STANDARD PLANS FOR BRIDGE CONSTRUCTION

| | |
|---|---|
| 400-510 | COMPOSITE ELASTOMERIC BEARING PADS - PRESTRESSED FLORIDA-I & AASHTO TYPE II BEAM |
| 415-001 | BAR BENDING DETAILS (STEEL) |
| 450-120 | AASHTO TYPE II BEAM |
| 450-199 | PRESTRESSED I-BEAM BUILD-UP & DEFLECTION DATA |
| 450-512 | BEARING PLATES (TYPE 2) - PRESTRESSED FLORIDA-I AND AASHTO TYPE II BEAMS |
| 458-110 | EXPANSION JOINT SYSTEM - POURED JOINT WITH BACKER ROD |
| 630-010 | CONDUIT DETAILS - EMBEDDED |

## EXISTING BRIDGE PLANS

BX-1 THRU BX-8 EXISTING BRIDGE PLANS

PROJECT LOCATION

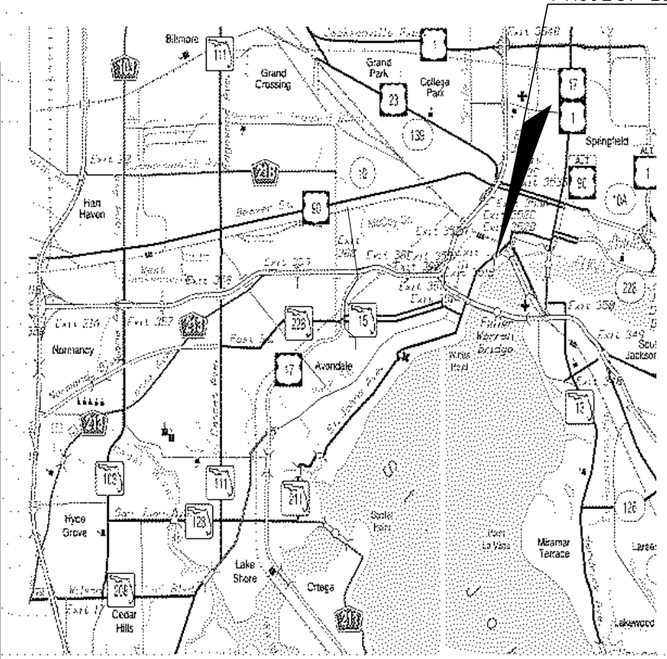


## VICINITY MAP

NTS

PREPARED FOR

CITY OF JACKSONVILLE
DUVAL COUNTY, FLORIDA

MAYOR: DONNA DEEGAN
COJ ENGINEERING: SCOTT CARTER, P.E.

214 NORTH HOGAN STREET
JACKSONVILLE, FLORIDA 32202

FINAL PLANS SUBMITTAL
AUGUST 2025

## PLAN APPROVAL

_____ Date _____ Development Services Division (Chief)

_____ Date _____ Review Group (Reviewer)

Plan approval is valid for five years after the initial approval date. Revisions made after the initial approval date do not extend this five-year time frame.

PLAN APPROVAL IS SUBJECT TO THE FOLLOWING NOTES AND CONDITIONS:

## GENERAL PROJECT INFORMATION

| | |
|---|---|
| GENERAL | |
| City Development Number | 6256.484 |
| Concurrency Application Number | |
| Property Appraiser Number (RE #) | |
| Zoning Designation | |
| Zoning Application(s) (if any) | |
| PUD Ordinance Number | |
| FIRM – Community – Panel | |
| Flood Zones (Show in Plans) | |
| Base Flood Elev. (Show in Plans) | |
| Vertical Datum Used for Project | NAVD-88 |
| JEA Availability Number | |
| SUBDIVISION | |
| PSD Number | |
| City or Private Inspection | |
| Public or Private Roads | |
| Subdivision ("911") Disk Provided? | |
| NON-SUBDIVISION | |
| North American Industry Classification System (NAICS) | |
| Impervious Area (Sq. Ft.) | |

NOTE:
GOVERNING STANDARD PLANS:
-CITY OF JACKSONVILLE STANDARD PLANS
-FL DEPT. OF TRANSPORTATION STANDARD PLANS FOR ROAD AND BRIDGE CONST.

PROJECT NO. CDN 6256.484

4345 SOUTHPOINT BLVD. SUITE 200
Jacksonville, FL 32256
(904) 730-9777

KEY SHEET

MODIFICATION OF NORTHBANK PEDESTRIAN BRIDGE OVER MCCOYS CREEK OUTFALL

SHEET NUMBER

B-1

THE OFFICIAL RECORD OF THIS SHEET IS THE ELECTRONIC FILE DIGITALLY SIGNED AND SEALED UNDER RULE 61G15-23.004, F.A.C.

Docusign Envelope ID: F54DB230-A150-452A-B3F0-14C4A48C193C

BHUSHAN A. GODBOLE
LICENSE
No 54325
STATE OF
FLORIDA
PROFESSIONAL ENGINEER

THIS ITEM HAS BEEN DIGITALLY SIGNED AND SEALED BY:

ON THE DATE ADJACENT TO THE SEAL.

PRINTED COPIES OF THIS DOCUMENT ARE NOT CONSIDERED SIGNED AND SEALED AND THE SIGNATURE MUST BE VERIFIED ON ANY ELECTRONIC COPIES.

STV INCORPORATED
4345 Southpoint Blvd, Suite 200
Jacksonville, Florida 32216
Bhushan A. Godbole, P.E. No. 54325

THE ABOVE NAMED PROFESSIONAL ENGINEER SHALL BE RESPONSIBLE FOR THE FOLLOWING SHEETS IN ACCORDANCE WITH RULE 61G15-23.004, F.A.C.

| SHEET NO. | SHEET DESCRIPTION |
|---|---|
| B-1 | KEY SHEET |
| B-2 | SIGNATURE SHEET |
| B-3 | GENERAL NOTES |
| B-4 | PLAN AND ELEVATION |
| B-5 | TYPICAL SECTIONS |
| B-7 | PROJECT CONTROL |
| B-8 | FOUNDATION LAYOUT |
| B-9 | PIER 1 - COLUMN 1 CAP |
| B-10 | PIER 1 - COLUMN 2 CAP |
| B-11 | PIER 2 - COLUMN 1 CAP |
| B-12 | PIER 2 - COLUMN 2 CAP |
| B-13 | PIER CAP DETAILS (1 OF 2) |
| B-14 | PIER CAP DETAILS (2 OF 2) |
| B-15 | COLUMN AND FOOTING DETAILS (1 OF 2) |
| B-16 | COLUMN AND FOOTING DETAILS (2 OF 2) |
| B-17 | FINISH GRADE ELEVATIONS |
| B-18 | SUPERSTRUCTURE PLAN |
| B-19 | SUPERSTRUCTURE SECTIONS |
| B-20 | SUPERSTRUCTURE DETAILS (1 OF 2) |
| B-21 | SUPERSTRUCTURE DETAILS (2 OF 2) |
| B-22 | AASHTO TYPE II BEAM - TABLE OF BEAM VARIABLES |
| B-23 | BEARING DETAILS |
| B-24 | REINFORCING BAR LIST (1 OF 2) |
| B-25 | REINFORCING BAR LIST (2 OF 2) |

JOHN B. KIMBERLY IV
LICENSE
No 49866
STATE OF
FLORIDA
PROFESSIONAL ENGINEER

THIS ITEM HAS BEEN DIGITALLY SIGNED AND SEALED BY:

ON THE DATE ADJACENT TO THE SEAL.

PRINTED COPIES OF THIS DOCUMENT ARE NOT CONSIDERED SIGNED AND SEALED AND THE SIGNATURE MUST BE VERIFIED ON ANY ELECTRONIC COPIES.

TERRACON
8001 Baymeadows Way, Suite 1
Jacksonville, Florida 32256
John B. Kimberly IV, P.E. No. 49866

THE ABOVE NAMED PROFESSIONAL ENGINEER SHALL BE RESPONSIBLE FOR THE FOLLOWING SHEETS IN ACCORDANCE WITH RULE 61G15-23.004, F.A.C.

| SHEET NO. | SHEET DESCRIPTION |
|---|---|
| B-2 | SIGNATURE SHEET |
| B-6 | REPORT OF CORE BORINGS |

JORGE LEON
LICENSE
No 68705
STATE OF
FLORIDA
PROFESSIONAL ENGINEER

THIS ITEM HAS BEEN DIGITALLY SIGNED AND SEALED BY:

ON THE DATE ADJACENT TO THE SEAL.

PRINTED COPIES OF THIS DOCUMENT ARE NOT CONSIDERED SIGNED AND SEALED AND THE SIGNATURE MUST BE VERIFIED ON ANY ELECTRONIC COPIES.

STV INCORPORATED
4345 Southpoint Blvd, Suite 200
Jacksonville, Florida 32216
Jorge Leon, P.E. No. 68705

THE ABOVE NAMED PROFESSIONAL ENGINEER SHALL BE RESPONSIBLE FOR THE FOLLOWING SHEETS IN ACCORDANCE WITH RULE 61G15-23.004, F.A.C.

| SHEET NO. | SHEET DESCRIPTION |
|---|---|
| B-2 | SIGNATURE SHEET |
| L-1 | LIGHTING DETAILS |

Docusign Envelope ID: F54DB230-A150-452A-B3F0-14C4A48C193C

DESIGN SPECIFICATIONS:
FDOT Structures Manual dated January 2025.

American Association of State Highway and Transportation Officials (AASHTO) Load and Resistance Factor (LRFD) Bridge Design Specifications, 9th Edition (2020).

AASHTO LRFD Guide Specifications for the Design of Pedestrian Bridges (2009) with 2015 Interims

FDOT Design Manual dated January 2025.

GOVERNING STANDARDS AND CONSTRUCTION SPECIFICATIONS:
Florida Department of Transportation, FY 2025-26 Standard Plans and revised Index Drawings as appended herein, and 2025-26 Standard Specifications for Road and Bridge Construction, as amended by Contract Documents.

VERTICAL DATUM:
Vertical Datum used is NAVD 88.

ENVIRONMENT:
Superstructure: Extremely Aggressive
Substructure:

Steel: Extremely Aggressive
Concrete: Extremely Aggressive

Within 2,500 feet of a body of water with chloride concentrations in excess of 6,000 ppm.

DESIGN METHODOLOGY:
Load and Resistance Factor Design (LRFD) method using strength, service, extreme event, and fatigue limit states.

DESIGN LOADINGS:
1. Live Loads

| | |
|---|---|
| Pedestrian Traffic | 90 psf |
| Maintenance Vehicle (No Dynamic Load Allowance) | H-10 Truck |

2. Dead Loads

| | |
|---|---|
| Bridge Pedestrian/Bicycle Railing (Steel) | 30 plf |
| Stay-In-Place Forms | 20 psf |
| Reinforced Concrete | 150 pcf |

3. Utilities
No allowance for utility loads has been included in the design.

MATERIALS:
1. REINFORCING STEEL:
All reinforcing steel shall be Grade 60 carbon steel per Specifications Section 931.

2. CONCRETE:
All concrete shall be in accordance with Section 346 of the FDOT Specifications.

| Concrete Class | Min. 28-day Compressive Strength (psi) | Location of Concrete in Structure |
|---|---|---|
| I | 3,000 | C.I.P. Concrete Topping |
| IV | 5,500 | C.I.P. Concrete Deck |
| III | 5,000 | Hollow Core Slabs |
| IV* | 5,500 | C.I.P. Substructure |
| VI | 8,500 | Prestressed AASHTO Type II Concrete Beams |

* Concrete for Pier Caps, Columns and Footings shall consisted of use of Highly Reactive Pozzolans such as Metakaolin or Ultrafine Flyash. Use of Silica fume is not permitted.

3. CONCRETE COVER:

| | |
|---|---|
| Cast-In-Place Superstructure | 2" |
| Precast Prestressed Beams (Except Top Surface) | 2" |
| Top Surface of Beam Top Flange | ¾" |
| Cast-In-Place Substructure (Cast Against Earth and In Contact with Water) | 4½" |
| Cast-In-Place Substructure (Formed Surfaces) | 4" |
| Cast-In-Place Substructure (Top of Beam Pedestals) | 2" |

Concrete cover dimensions shown in the plans do not include placement and fabrication tolerances unless shown as "minimum cover". See Specifications Section 415 for allowable tolerances. All dimensions pertaining to the location of reinforcing steel are to centerline of bar except where clear dimension is noted to face of concrete.

PRESTRESSING STRANDS:
All prestressing strands shall be ASTM A416, Grade 270, low relaxation strands (fpu = 270 ksi).

CONCRETE SURFACE FINISH:
Pedestrian Walkway surface shall be painted to restore the original mural pattern. No existing plans are available. Refer to illustration below of prior condition before demolition of existing 4 bridge spans. Coordinate with City of Jacksonville for directions and approval.

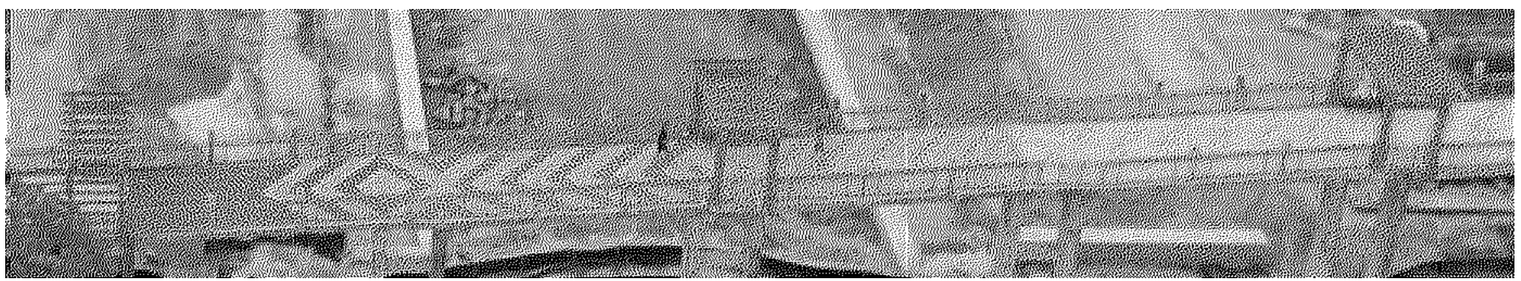

STAY-IN-PLACE DECK FORMS:
Design includes allowance for 20 psf over the projected plan area of the metal forms for the unit weight of the metal forms and the concrete required to fill the form flutes. Stay-in-place forms are not allowed at deck cantilevers

PLAN DIMENSIONS:
All dimensions in these plans are measured in feet either horizontally or vertically unless otherwise noted and need to be field verified.

UTILITIES:
For Plan locations of existing utilities, see Plan and Elevation Sheet. Locations of utilities shown in the plans are approximate.

JOINTS IN CONCRETE:
Construction joints will be permitted only at the locations indicated in the plans. Additional construction joints or alterations to those shown shall require approval of the Engineer.

DIMENSION VERIFICATION:
Unless otherwise noted, existing dimensions, elevations, and intersecting angles shown are based on the information as detailed in the existing bridge plans and may not represent as-built conditions. It is the Contractor's responsibility to verify existing conditions before beginning construction and notify the Engineer of any discrepancies.

PROTECTION OF EXISTING STRUCTURES:
1. Monitor existing structures during construction in accordance with Specifications Section 108.
2. Vibratory equipment shall not be permitted during pile installation.

ABBREVIATIONS:
The following abbreviations are used in the plans in addition to those provided on the Standard Plans Abbreviations sheet:

EF = "Each Face"
FF = "Front Face"
NF = "Near Face"
UON = "Unless Otherwise Noted"
EJ = "Expansion Joint"
E = "Expansion Bearing"
CJ = "Construction Joint"
OH = "Overhang"

PAY ITEM NOTES:
1. The cost of installation of welded wire fabric in 2" topping and expansion filler material at joints including material and labor is incidental to topping concrete and shall be included with Topping Concrete.
2. The cost of installation of the existing arbor structure including material and labor shall be incidental to Site Preparation and included with Item 4 COJ Site Preparation.
3. All costs related to the Material, Design and Installation of micropile foundations including verification Testing shall be included with Item 455-39-10 Micropiles, Furnish and Install, 10".
4. Costs of moving and/or replacing existing riprap around the proposed pier footings to facilitate installation shall be considered incidental to Item, 400-4-25 Concrete Class IV, Mass-substructure.
5. The cost of aesthetic treatment on the pedestrian walkway surface to install the painted mural pattern is incidental to Superstructure and shall be included with Item 400-4-4 Concrete Class IV, Superstructure.
6. It is the intent of this contract to reuse and match all existing railing, arbor and light fixtures which have been removed from the original bridge and stored at the adjacent construction site. However, it will be the responsibility of the contractor to inspect the condition for reuse and factor that into bid price for respective pay items. Cost of material and labor necessary for new sections of railings at the landings is incidental to the railings.
7. The cost of minor structures removal necessary is considered incidental to the project and shall be included with Item 4 COJ Site Preparation.

NOTICE: THE OFFICIAL RECORD OF THIS SHEET IS THE ELECTRONIC FILE DIGITALLY SIGNED AND SEALED UNDER RULE 61G15-23.004, F.A.C.

REVISIONS

| DATE | BY | DESCRIPTION | DATE | BY | DESCRIPTION |
|---|---|---|---|---|---|
| | | | | | |

Bhushan Godbole, P.E.
P.E. NO.: 54325
STV Incorporated
4345 Southpoint Blvd., Suite 200
Jacksonville, Florida 32216



DRAWN BY: HGD 06-25
CHECKED BY: MBH 06-25
DESIGNED BY: MBH 06-25
CHECKED BY: BAG 06-25

CITY OF JACKSONVILLE, FLORIDA
DEPARTMENT OF PUBLIC WORKS

PROJECT #: CDN 6256.484

SHEET TITLE: GENERAL NOTES

PROJECT NAME: MODIFICATION OF NORTHBANK PEDESTRIAN BRIDGE OVER MCCOYS CREEK OUTFALL

REF. DWG. NO.

SHEET NO. B-3

Docusign Envelope ID: F54DB230-A150-452A-B3F0-14C4A48C193C

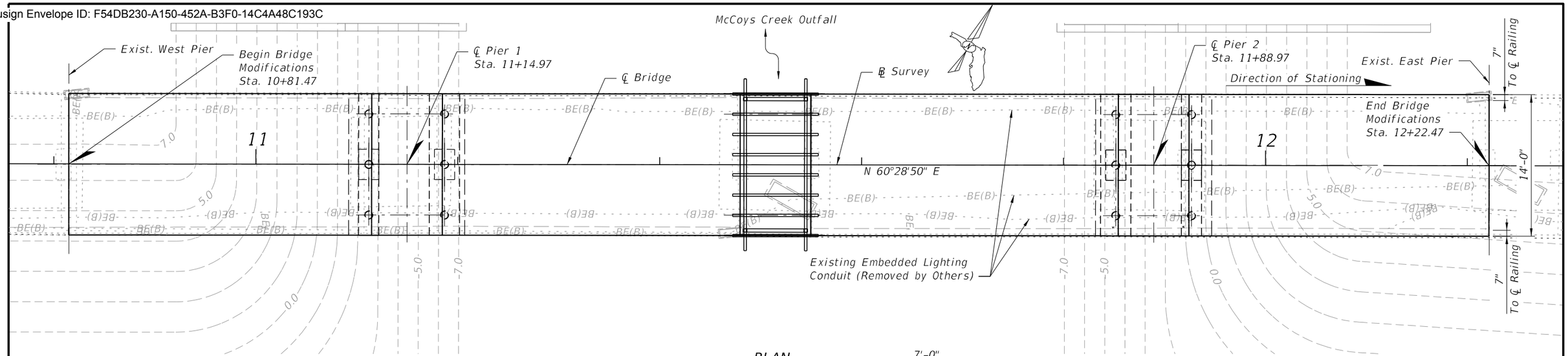


PLAN

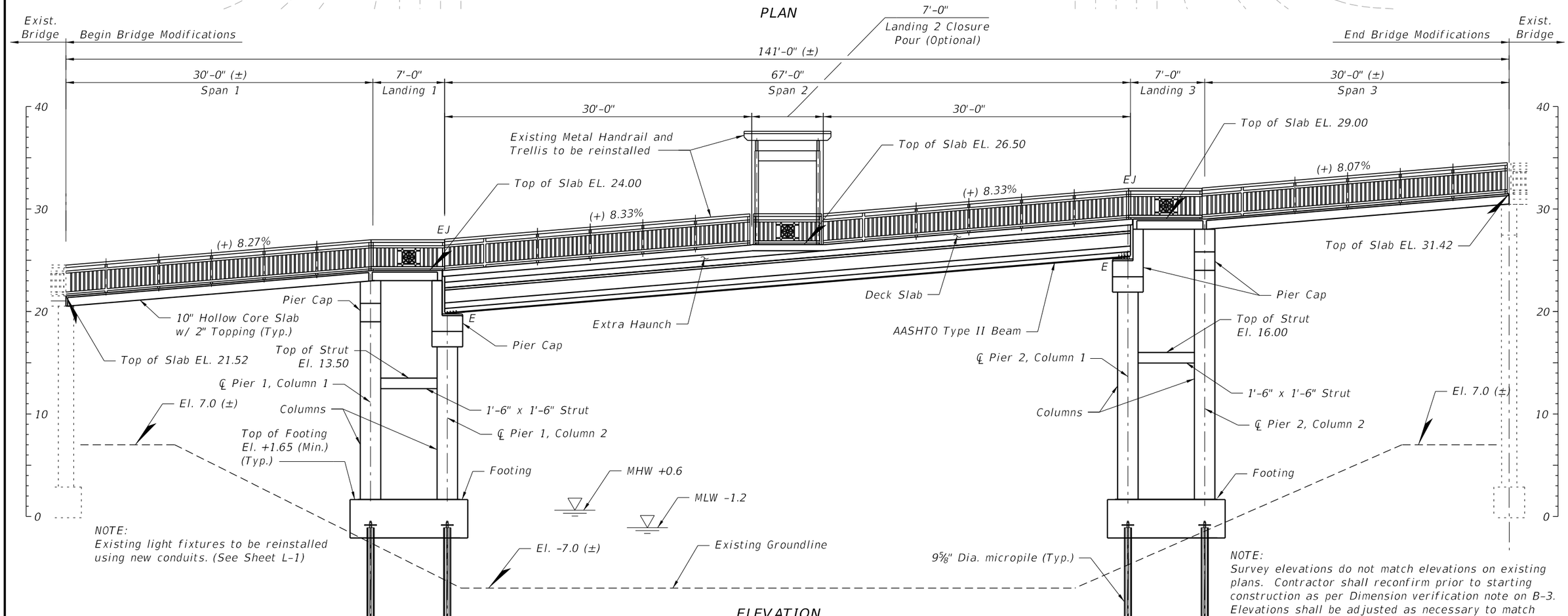


NOTE:
Existing light fixtures to be reinstalled using new conduits. (See Sheet L-1)

NOTE:
Survey elevations do not match elevations on existing plans. Contractor shall reconfirm prior to starting construction as per Dimension verification note on B-3. Elevations shall be adjusted as necessary to match existing structure.

ELEVATION

| REVISIONS | | | | | |
|---|---|---|---|---|---|
| DATE | BY | DESCRIPTION | DATE | BY | DESCRIPTION |
| | | | | | |

Bhushan Godbole, P.E.
P.E. NO.: 54325
STV Incorporated
4345 Southpoint Blvd., Suite 200
Jacksonville, Florida 32216



DRAWN BY: HGD 06-25
CHECKED BY: MBH 06-25
DESIGNED BY: MBH 06-25
CHECKED BY: BAG 06-25

CITY OF JACKSONVILLE, FLORIDA
DEPARTMENT OF PUBLIC WORKS

PROJECT #: CDN 6256.484

SHEET TITLE: PLAN AND ELEVATION

PROJECT NAME: MODIFICATION OF NORTHBANK PEDESTRIAN BRIDGE OVER MCCOYS CREEK OUTFALL

REF. DWG. NO.

SHEET NO. B-4

NOTICE: THE OFFICIAL RECORD OF THIS SHEET IS THE ELECTRONIC FILE DIGITALLY SIGNED AND SEALED UNDER RULE 61G15-23.004, F.A.C.

Docusign Envelope ID: F54DB230-A150-452A-B3F0-14C4A48C193C

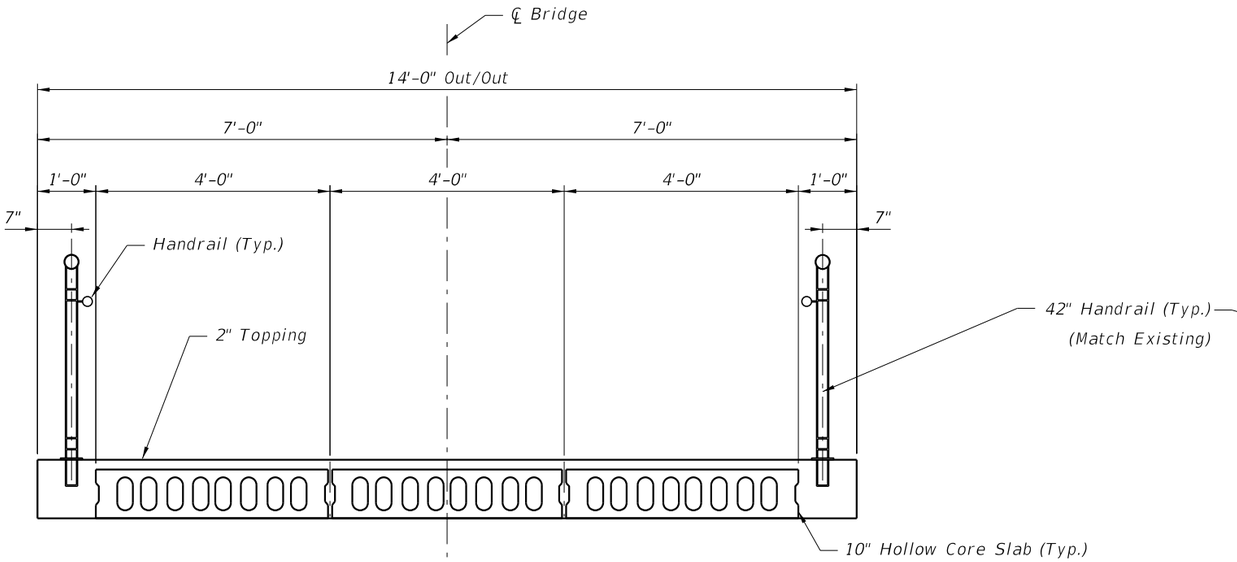


TYPICAL SECTION AT SPANS 1 & 3
AND LANDINGS 1 & 3

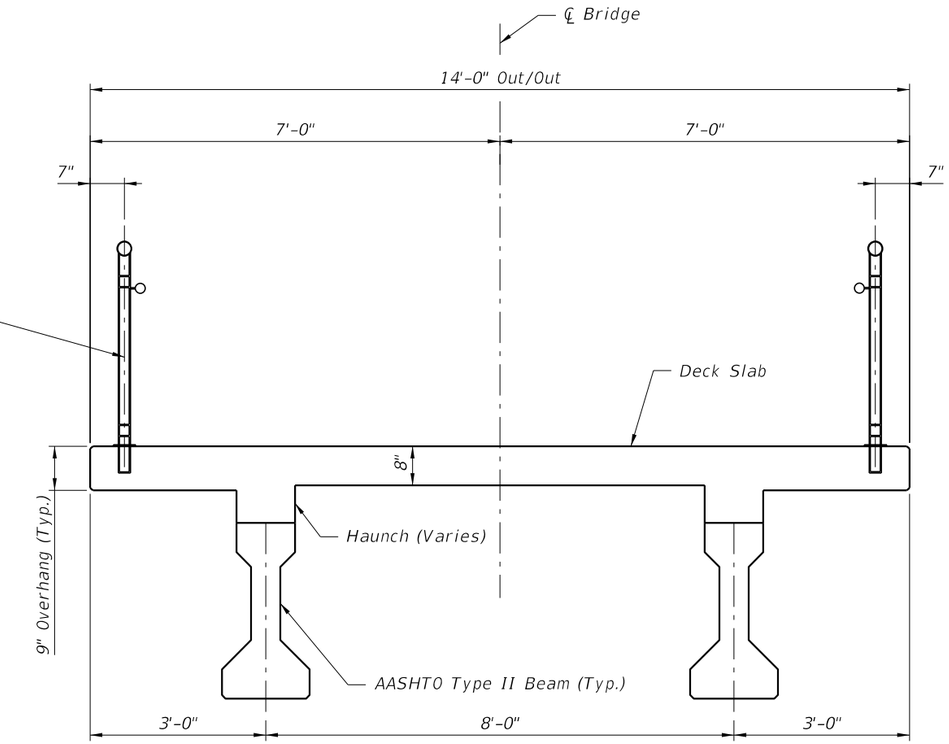


TYPICAL SECTION AT SPAN 2

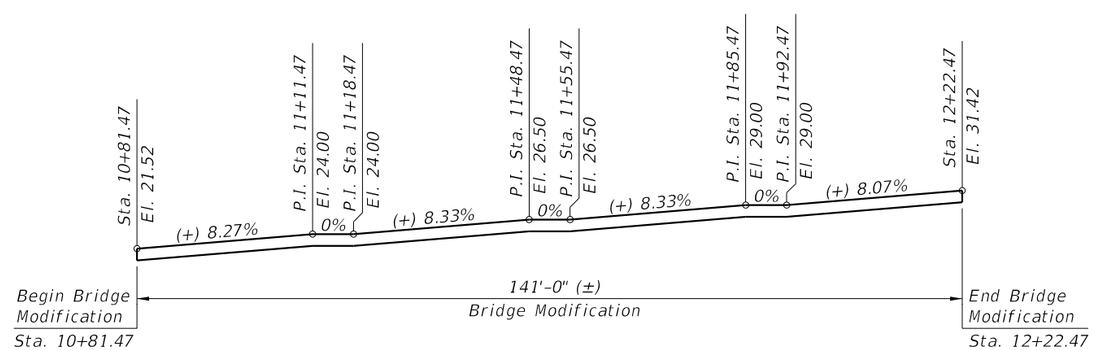


VERTICAL CURVE DATA

| REVISIONS | | | | | |
|---|---|---|---|---|---|
| DATE | BY | DESCRIPTION | DATE | BY | DESCRIPTION |
| | | | | | |

Bhushan Godbole, P.E.
P.E. NO.: 54325
STV Incorporated
4345 Southpoint Blvd., Suite 200
Jacksonville, Florida 32216



DRAWN BY: HGD 06-25
CHECKED BY: MBH 06-25
DESIGNED BY: MBH 06-25
CHECKED BY: BAG 06-25

CITY OF JACKSONVILLE, FLORIDA
DEPARTMENT OF PUBLIC WORKS

PROJECT #: CDN 6256.484

SHEET TITLE: TYPICAL SECTIONS

PROJECT NAME: MODIFICATION OF NORTHBANK PEDESTRIAN BRIDGE OVER MCCOYS CREEK OUTFALL

REF. DWG. NO.

SHEET NO. B-5

NOTICE: THE OFFICIAL RECORD OF THIS SHEET IS THE ELECTRONIC FILE DIGITALLY SIGNED AND SEALED UNDER RULE 61G15-23.004, F.A.C.

Docusign Envelope ID: F54DB230-A150-452A-B3F0-14C4A48C193C

0 20 100
Feet

LEGEND

APPROXIMATE LOCATION OF SPT BORING

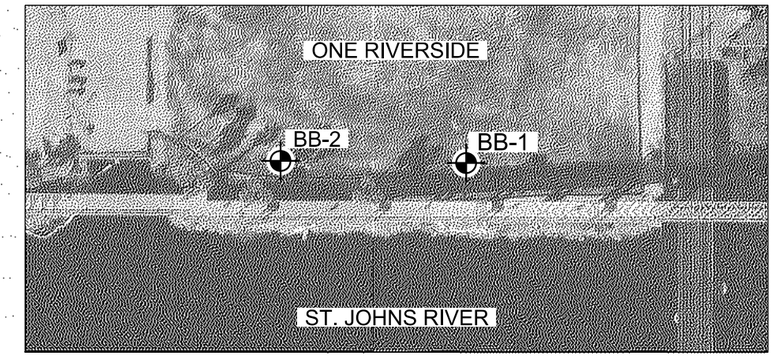


BORING No.: BB-1
LATITUDE: 30.323761°
LONGITUDE: -81.666783°
ELEVATION: +5.0'

ELEVATION IN FEET: +10, +5, 0, -5, -10, -15, -20, -25, -30, -35, -40, -45, -50, -55, -60, -65, -70, -75, -80, -85, -90, -95, -100

| Elevation | N | Description |
|---|---|---|
| | 20, 32, 22, 30, 40 | BROWN TO GRAY FINE SAND WITH SILT AND CONCRETE, BRICK AND OTHER DEBRIS (SP-SM) |
| | 12, 7, 7 | DARK GRAY FINE TO MEDIUM GRAINED SAND WITH SILT AND PEA-SIZED GRAVEL (SP-SM) |
| | 11, 10, 7 | DARK GRAY SILTY SAND WITH TRACE CLAY, FEW WOOD PIECES AND SHELL FRAGMENTS (SM) |
| | 5, 2, 7 | BROWN TO GRAY FINE SAND (SP) |
| | 9, 8 | GRAY SILTY SAND (SM) |
| | 15, 24, 50/3", 50/2" | TAN FINE SAND FEW WEATHERED LIMESTONE FRAGMENTS (SP) |
| | 33, 30, 32, 32, 26, 26, 17, 17, 15, 12 | GRAY SILTY SAND, FEW WEATHERED LIMEROCK FRAGMENTS (SM) |
| | 13, 13, 11, 13, 11, 11, 14, 13, 11, 12, 14 | GRAY SILTY CLAY (CH) |
| | | GREENISH GRAY CLAYEY SAND, FEW SHELL FRAGMENTS (SC) |
| | | DARK GREENISH GRAY CLAYEY SAND (SC) |

6-14-24
W=19 | -200=11
W=138 | -200=17 | OC=2.8
W=47 | -200=22
W=29 | -200=26
W=35 | -200=84 | LL=69 | PI=42
W=39 | -200=16 | LL=42 | PI=17

BORING TERM. @ 100.0'
CASING: 25'
GROUNDWATER @ 5.0'
BORING DRILLED: 6-14-24
HAMMER TYPE: AUTOMATIC
RIG TYPE: D-50
DRILLED BY: M. WALLER

BORING No.: BB-2
LATITUDE: 30.323596°
LONGITUDE: -81.667122°
ELEVATION: +5.0'

| N | Description |
|---|---|
| 15, 18, 29, 8, 35 | BROWN FINE SAND WITH TRACE SHELL AND LIMEROCK FRAGMENTS (SP) |
| 27, 28, 20, 20, 30 | BROWN TO GRAY FINE SAND (SP) |
| 22, 24, 28, 44 | GRAY TO BROWN FINE SAND WITH SILT AND CONCRETE AND BRICK DEBRIS (SP-SM) |
| 50/3", 22, 20 | GRAY TO BROWN FINE SAND WITH SILT (SP-SM) |
| 50/5", 50/4" | TAN SILTY SAND, FEW WEATHERED LIMESTONE FRAGMENTS (SM) |
| 28, 19, 21, 19, 30, 40, 23, 25, 13, 13, 14, 13, 11, 12, 12, 14, 12, 12, 12, 12, 14, 13 | GRAY CLAYEY SILTY SAND, TRACE WEATHERED LIMESTONE FRAGMENTS (SC-SM) |
| | NO RECOVERY 41.0' TO 46.0' |
| | BROWN TO GRAY SILTY CLAY (CH) |
| | GRAY TO LIGHT GRAY SILTY SAND (SM) |
| | GREENISH GRAY CLAYEY SAND, FEW SHELL FRAGMENTS (SC) |
| | GREENISH GRAY CLAYEY SAND (SC) |

6-11-24
W=23 | -200=3
W=25 | -200=7 | OC=0.3
W=25 | -200=28 | LL=25 | PI=6
W=30 | -200=20
W=70 | -200=23 | LL=49 | PI=23

BORING TERM. @ 100.0'
CASING: 35'
GROUNDWATER @ 5.0'
BORING DRILLED: 6-11-24
HAMMER TYPE: AUTOMATIC
RIG TYPE: D-50
DRILLED BY: M. WALLER

LEGEND

SAND — CLAYEY SAND
SILTY SAND — SILTY CLAY

(SP) UNIFIED SOIL CLASSIFICATION GROUP SYMBOL
6-14-24 ENCOUNTERED GROUNDWATER LEVEL (DATE OF READING)
W=0 -200=0 LL=0 PI=0 OC=0 — NATURAL MOISTURE CONTENT (%); FINES PASSING No. 200 SIEVE (%); LIQUID LIMIT (%); PLASTICITY INDEX (%); ORGANIC CONTENT (%)
N STANDARD PENETRATION RESISTANCE IN BLOWS PER FOOT UNLESS OTHERWISE NOTED
LOSS OF DRILLING FLUID CIRCULATION
50/6" NUMBER OF BLOWS REQUIRED (50) TO DRIVE SAMPLING SPOON (6) INCHES
TEMPORARY CASING

AUTOMATIC HAMMER

STANDARD PENETRATION TEST DATA

| | |
|---|---|
| SPOON INSIDE DIA. | 1 3/8 in. |
| SPOON OUTSIDE DIA. | 2 in. |
| ASTM STANDARD DROP | AUTOMATIC HAMMER |
| AVG. HAMMER DROP | 30 in. |
| HAMMER WEIGHT | 140 lbs. |

GRANULAR MATERIALS

| RELATIVE DENSITY | SPT (BLOWS/FOOT) |
|---|---|
| VERY LOOSE | LESS THAN 3 |
| LOOSE | 3-8 |
| MEDIUM DENSE | 8-24 |
| DENSE | 24-40 |
| VERY DENSE | GREATER THAN 40 |

SILTS AND CLAYS

| CONSISTENCY | SPT (BLOWS/FOOT) |
|---|---|
| VERY SOFT | LESS THAN 1 |
| SOFT | 1-3 |
| FIRM | 3-6 |
| STIFF | 6-12 |
| VERY STIFF | 12-24 |
| HARD | GREATER THAN 24 |

NOTES:

1) LAYER BOUNDARIES ARE APPROXIMATE AND REPRESENT SOIL LAYERS AT EACH TEST HOLE LOCATION ONLY. SUBSURFACE VARIATIONS BETWEEN BORINGS SHOULD BE ANTICIPATED.

2) ELEVATION ESTIMATED USING GOOGLE EARTH PRO

ENVIRONMENTAL CLASSIFICATION:

SUPERSTRUCTURE: EXTREMELY AGGRESSIVE
SUBSTRUCTURE:
STEEL: EXTREMELY AGGRESSIVE
CONCRETE: EXTREMELY AGGRESSIVE

WITHIN 2,500 FEET OF A BODY OF WATER WITH CHLORIDE CONCENTRATIONS IN EXCESS OF 6,000 ppm.

THE OFFICIAL RECORD OF THIS SHEET IS THE ELECTRONIC FILE DIGITALLY SIGNED AND SEALED UNDER RULE 61G15-23.004, F.A.C.

REVISIONS

| DATE | BY | DESCRIPTION | DATE | BY | DESCRIPTION |
|---|---|---|---|---|---|
| | | | | | |

JOHN B. KIMBERLY IV, P.E.
P.E. LICENSE NUMBER 49866
TERRACON
8001 BAYMEADOWS WAY - SUITE 1
JACKSONVILLE, FLORIDA 32256

DRAWN BY: PC 7-23-24
CHECKED BY: TH 7-23-24
DESIGNED BY:
CHECKED BY:

CITY OF JACKSONVILLE, FLORIDA
DEPARTMENT OF PUBLIC WORKS

PROJECT #: 674767-24

SHEET TITLE: REPORT OF CORE BORINGS

PROJECT NAME: MODIFICATION OF NORTHBANK PEDESTRIAN BRIDGE OVER MCCOYS CREEK OUTFALL

REF. DWG. NO.

SHEET NO. B-6

Docusign Envelope ID: F54DB230-A150-452A-B3F0-14C4A48C193C

SET3

PROJECT CONTROL NOTES

1. THE PURPOSE OF THIS CONTROL IS TO SUPPORT THE DESIGN EFFORTS FOR A PORTION OF THE NORTHBANK PEDESTRIAN BRIDGE ABOVE McCOYS CREEK AT THE CONFLUENCE WITH THE St. JOHNS RIVER.

2. HORIZONTAL COORDINATES ARE HELD ON THE NORTH AMERICAN DATUM OF 1983, 2011 ADJUSTMENT (NAD83/11) FLORIDA STATE PLANE COORDINATES, EAST ZONE (901).ALL UNITS ARE IN US SURVEY FEET UNLESS OTHERWISE NOTED.

3. ELEVATIONS SHOWN FOR THIS SURVEY WERE PERFORMED ON THE NORTH AMERICAN VERTICAL DATUM OF 1988 (NAVD88) THE CONVERSION BETWEEN NAVD88 AND NGVD29 SHOWN WAS DETERMINED UTILIZING THE NATIONAL GEODETIC SURVEY'S (NGS) COORDINATE TRANSFORMATION TOOL: NAVD+1.09'=NGVD

SET1

0 50 100 200 300

Scale: 1" = 100'

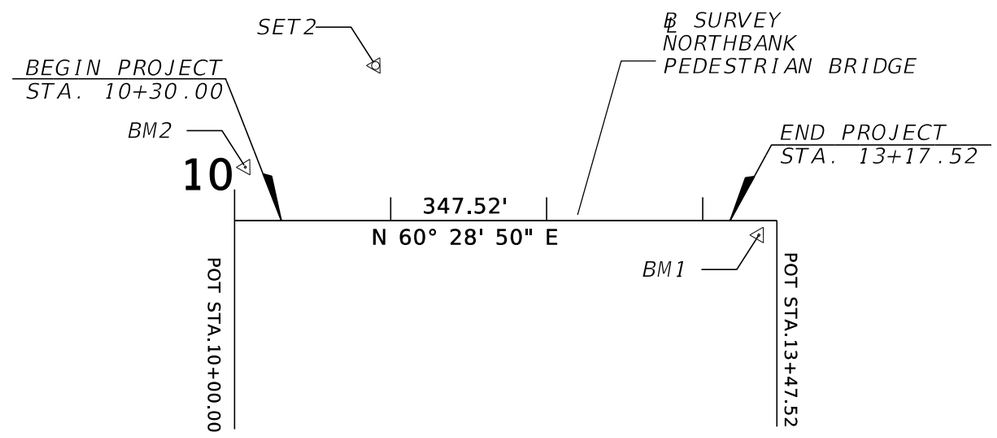


## HORIZONTAL AND VERTICAL CONTROL NORTHBANK PEDESTRIAN BRIDGE

| POINT ID | ℄ STATION | OFFSET | NORTHING (Y) | EASTING (X) | DESCRIPTION | ELEVATION (NAVD88) | ELEVATION (NGVD29) |
|---|---|---|---|---|---|---|---|
| BM1 | 13+35.95 | 9.15 RT | 2178315.51 | 445916.51 | NLD - SET MAG NAIL AND DISK "DRMP BENCHMARK" | 4.90 | 5.99 |
| BM2 | 10+06.90 | 34.31 (LT) | 2178191.19 | 445608.75 | NLD - SET MAG NAIL AND DISK "DRMP TRAVERSE" | 7.60 | 8.69 |
| SET1 | 13+28.37 | 290.73 (LT) | 2178572.72 | 445762.15 | IRC- SET 5/8" IRON ROD AND CAP DRMP TRAVERSE | 8.36 | 9.45 |
| SET2 | 10+90.33 | 99.34 (LT) | 2178288.89 | 445649.31 | IRC- SET 5/8" IRON ROD AND CAP DRMP TRAVERSE | 6.94 | 8.03 |
| SET3 | OffChain | OffChain | 2178403.99 | 445315.60 | NLD - SET NAIL AND DISK DRMP TRAVERSE | 23.77 | 24.86 |

REVISIONS

| DATE | BY | DESCRIPTION | DATE | BY | DESCRIPTION |
|---|---|---|---|---|---|
| | | | | | |

Bhushan Godbole, P.E.
P.E. NO.: 54325
STV Incorporated
4345 Southpoint Blvd., Suite 200
Jacksonville, Florida 32216

DRAWN BY: HGD 06-25
CHECKED BY: MBH 06-25
DESIGNED BY: MBH 06-25
CHECKED BY: BAG 06-25

CITY OF JACKSONVILLE, FLORIDA
DEPARTMENT OF PUBLIC WORKS

PROJECT # CDN 6256.484

SHEET TITLE: PROJECT CONTROL

PROJECT NAME: MODIFICATION OF NORTHBANK PEDESTRIAN BRIDGE OVER MCCOYS CREEK OUTFALL

REF. DWG. NO.

SHEET NO. B-7



DangHG 8/22/2025 2:11:19 PM I:\Projects\4020666\4020666_2000\50_Deliverables & Submittals\Northbank ped bridge\survey\ALGNRD01.dgn

NOTICE: THE OFFICIAL RECORD OF THIS SHEET IS THE ELECTRONIC FILE DIGITALLY SIGNED AND SEALED UNDER RULE 61G15-23.004, F.A.C.

Docusign Envelope ID: F54DB230-A150-452A-B3F0-14C4A48C193C

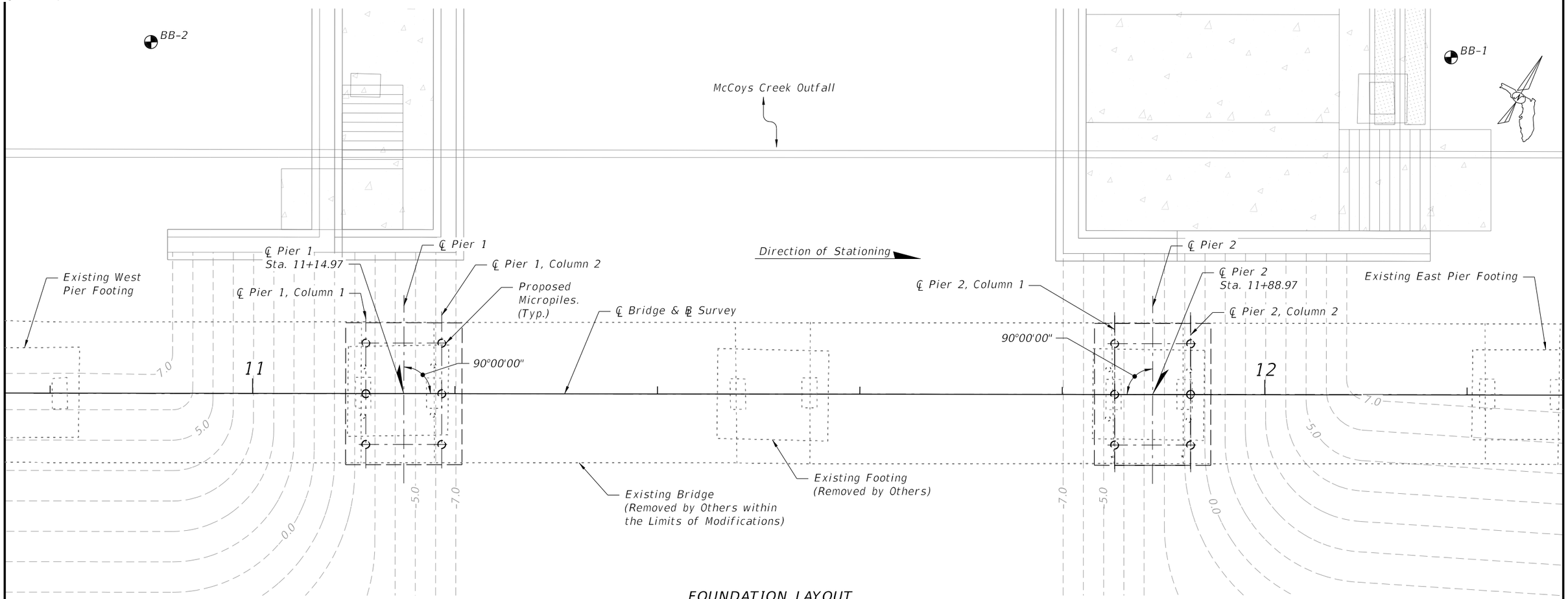


FOUNDATION LAYOUT

## LEGEND:

- denotes Proposed 9⅜"∅ Micropile
- denotes Existing 6"(±)∅ Micropile
- denotes Soil Boring Location

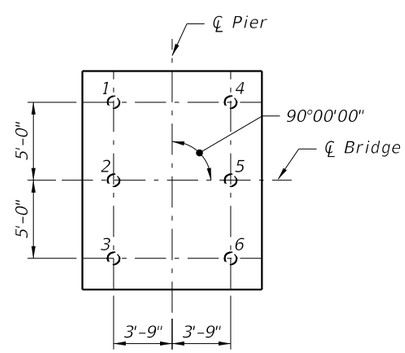


TYPICAL PIER FOOTING PILE LAYOUT

## NOTES:

1. Proposed Micropile Max. Factored Design Load (FDL): 60 tons (Compression)
   Service Design Load (SDL): 45 tons (Compression)
2. The test micropile should be an extra, non-production micropile ideally located within 10' of one of the Terracon borings.
3. Refer to Terracon Geotechnical BDR Report (EQ245022) dated September 20, 2024 , and to the Micropile Technical Special Provision prepared by Terracon dated June 10, 2025, for more information.
4. The general area of the site along the banks of the St. Johns River often contains rubble fill that can consist of concrete pipe sections and slabs, steel, bricks, wood, and other materials. The rubble fill zone can extend below elevation -20 feet. Robust installation equipment will be required to penetrate these materials.
5. The borings performed for this study encountered drilling fluid losses at elevations -6 feet, -14 feet, -21 feet, and -33 feet, indicating porous conditions in the rubble fill zone and underlying natural limestone formation.
6. The micropile permanent casing tip elevation should extend no deeper than elevation -35 feet so that the bond zone can be created within the limestone and marl formations. The micropile contractor is responsible for determining the final casing length as part of their design.
7. Micropile installation equipment should be selected such that the anticipated rubble fill materials and underlying cemented limestone can be penetrated to the design tip elevation without delays and added cost.
8. The micropile drilled holes should be properly cleaned out such that a proper bond can be developed between the grout and soil/rock in the bond zone

| REVISIONS | | | | | |
|---|---|---|---|---|---|
| DATE | BY | DESCRIPTION | DATE | BY | DESCRIPTION |
| | | | | | |

Bhushan Godbole, P.E.
P.E. NO.: 54325
STV Incorporated
4345 Southpoint Blvd., Suite 200
Jacksonville, Florida 32216



DRAWN BY: HGD 06-25
CHECKED BY: MBH 06-25
DESIGNED BY: MBH 06-25
CHECKED BY: BAG 06-25

CITY OF JACKSONVILLE, FLORIDA
DEPARTMENT OF PUBLIC WORKS

PROJECT #: CDN 6256.484

SHEET TITLE: FOUNDATION LAYOUT

PROJECT NAME: MODIFICATION OF NORTHBANK PEDESTRIAN BRIDGE OVER MCCOYS CREEK OUTFALL

REF. DWG. NO.

SHEET NO. B-8

DangHG 8/22/2025 2:11:21 PM I:\Projects\4020666\4020666_2000\50_Deliverables & Submittals\Northbank ped bridge\struct\B1FoundLayout01.dgn

NOTICE: THE OFFICIAL RECORD OF THIS SHEET IS THE ELECTRONIC FILE DIGITALLY SIGNED AND SEALED UNDER RULE 61G15-23.004, F.A.C.

Docusign Envelope ID: F54DB230-A150-452A-B3F0-14C4A48C193C

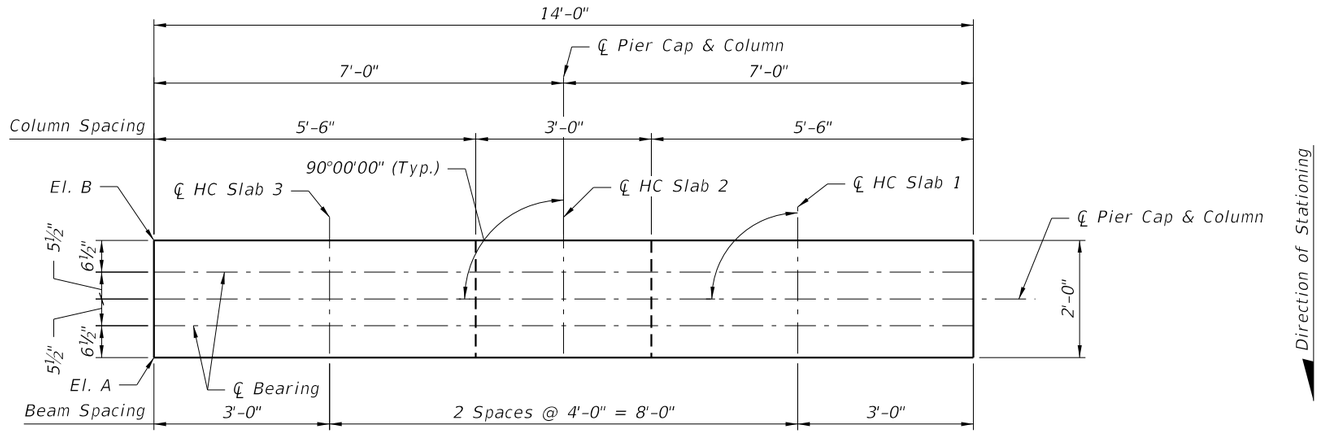


PLAN

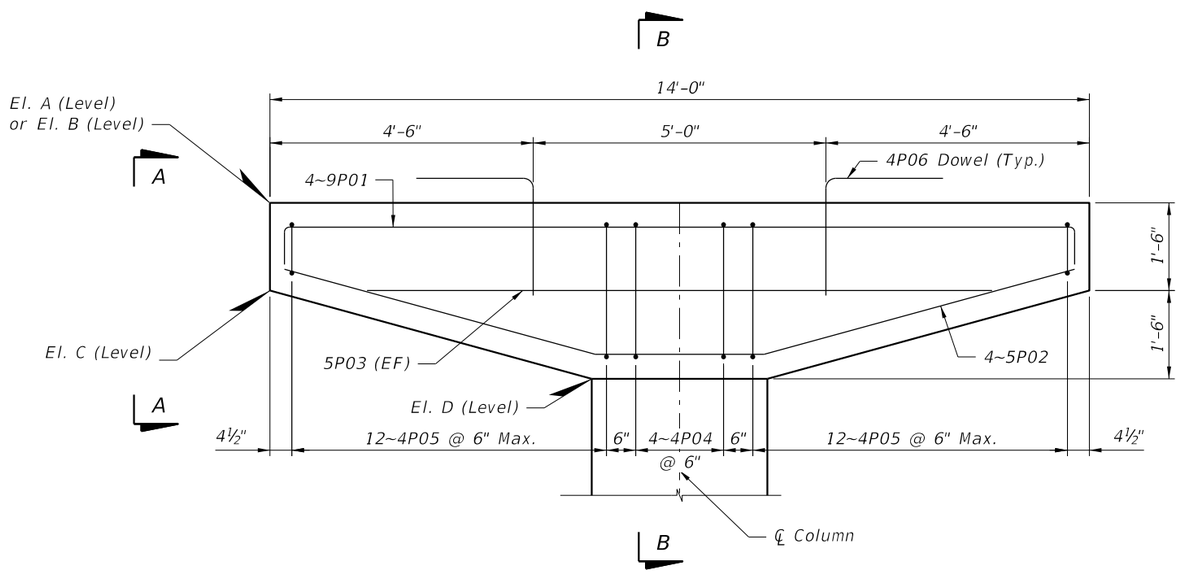


NOTE:
1. For elevations, View A-A and Section B-B refer to sheet B-13.

ELEVATION
(Pier Column shown at 30'-0" Span)

| REVISIONS | | | | | |
|---|---|---|---|---|---|
| DATE | BY | DESCRIPTION | DATE | BY | DESCRIPTION |
| | | | | | |

Bhushan Godbole, P.E.
P.E. NO.: 54325
STV Incorporated
4345 Southpoint Blvd., Suite 200
Jacksonville, Florida 32216



DRAWN BY: HGD 06-25
CHECKED BY: MBH 06-25
DESIGNED BY: MBH 06-25
CHECKED BY: BAG 06-25

CITY OF JACKSONVILLE, FLORIDA
DEPARTMENT OF PUBLIC WORKS

PROJECT #: CDN 6256.484

SHEET TITLE: PIER 1 - COLUMN 1 CAP

PROJECT NAME: MODIFICATION OF NORTHBANK PEDESTRIAN BRIDGE OVER MCCOYS CREEK OUTFALL

REF. DWG. NO.

SHEET NO. B-9

DangHG 8/22/2025 2:11:22 PM I:\Projects\4020666\4020666_2000\50_Deliverables & Submittals\Northbank ped bridge\struct\B1Pier01.dgn

NOTICE: THE OFFICIAL RECORD OF THIS SHEET IS THE ELECTRONIC FILE DIGITALLY SIGNED AND SEALED UNDER RULE 61G15-23.004, F.A.C.

Docusign Envelope ID: F54DB230-A150-452A-B3F0-14C4A48C193C

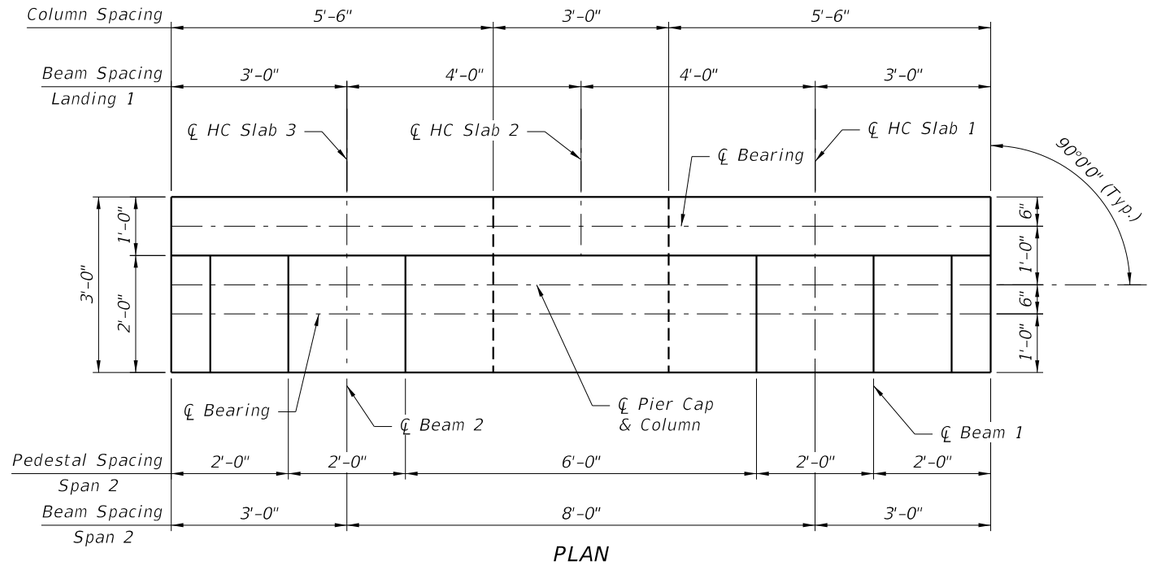


PLAN

Direction of Stationing

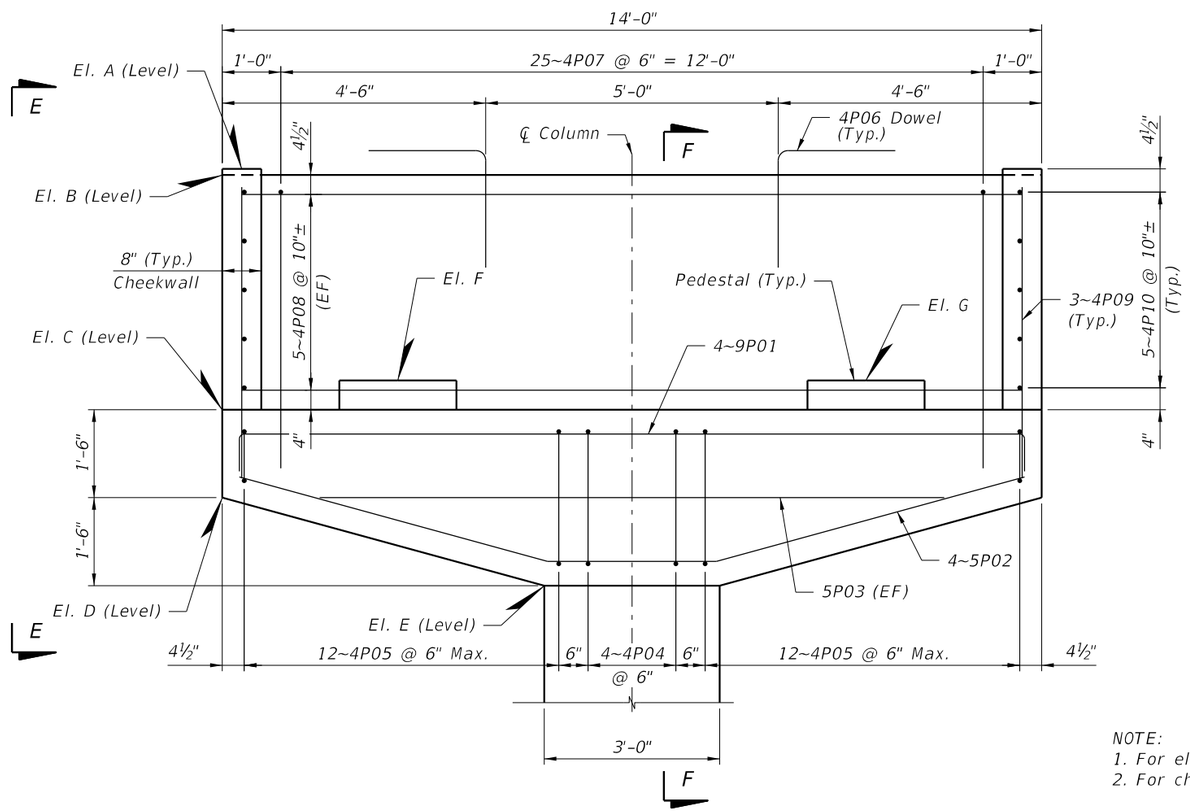


SECTION AT PIER
(Pier Column shown at 67'-0" Span)

NOTE:
1. For elevations, View E-E and Section F-F refer to B-14 sheet.
2. For cheekwall reinforcing refer to sheet B-14 for reinforcing details.

| REVISIONS | | | | | |
|---|---|---|---|---|---|
| DATE | BY | DESCRIPTION | DATE | BY | DESCRIPTION |
| | | | | | |

Bhushan Godbole, P.E.
P.E. NO.: 54325
STV Incorporated
4345 Southpoint Blvd., Suite 400
Jacksonville, Florida 32216

DRAWN BY: HGD 06-25
CHECKED BY: MBH 06-25
DESIGNED BY: MBH 06-25
CHECKED BY: BAG 06-25

CITY OF JACKSONVILLE, FLORIDA
DEPARTMENT OF PUBLIC WORKS

PROJECT #: CDN 6256.484

SHEET TITLE: PIER 1 - COLUMN 2 CAP

PROJECT NAME: MODIFICATION OF NORTHBANK PEDESTRIAN BRIDGE OVER MCCOYS CREEK OUTFALL

REF. DWG. NO.

SHEET NO. B-10



DangHG 8/22/2025 2:11:23 PM I:\Projects\4020666\4020666_2000\50_Deliverables & Submittals\Northbank ped bridge\struct\B1Pier02.dgn

NOTICE: THE OFFICIAL RECORD OF THIS SHEET IS THE ELECTRONIC FILE DIGITALLY SIGNED AND SEALED UNDER RULE 61G15-23.004, F.A.C.

Docusign Envelope ID: F54DB230-A150-452A-B3F0-14C4A48C193C

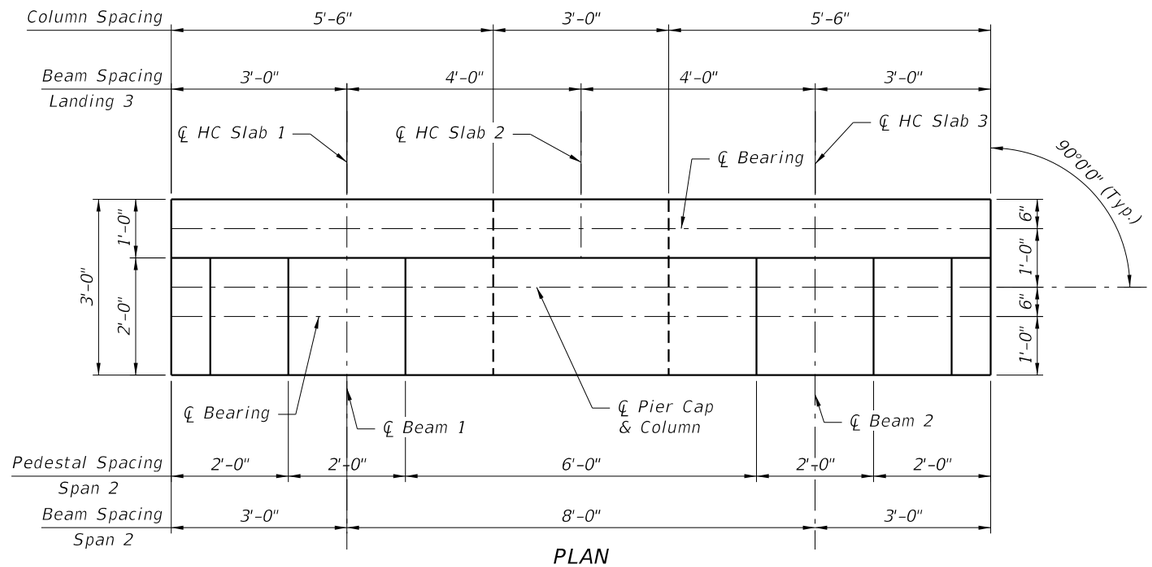


PLAN

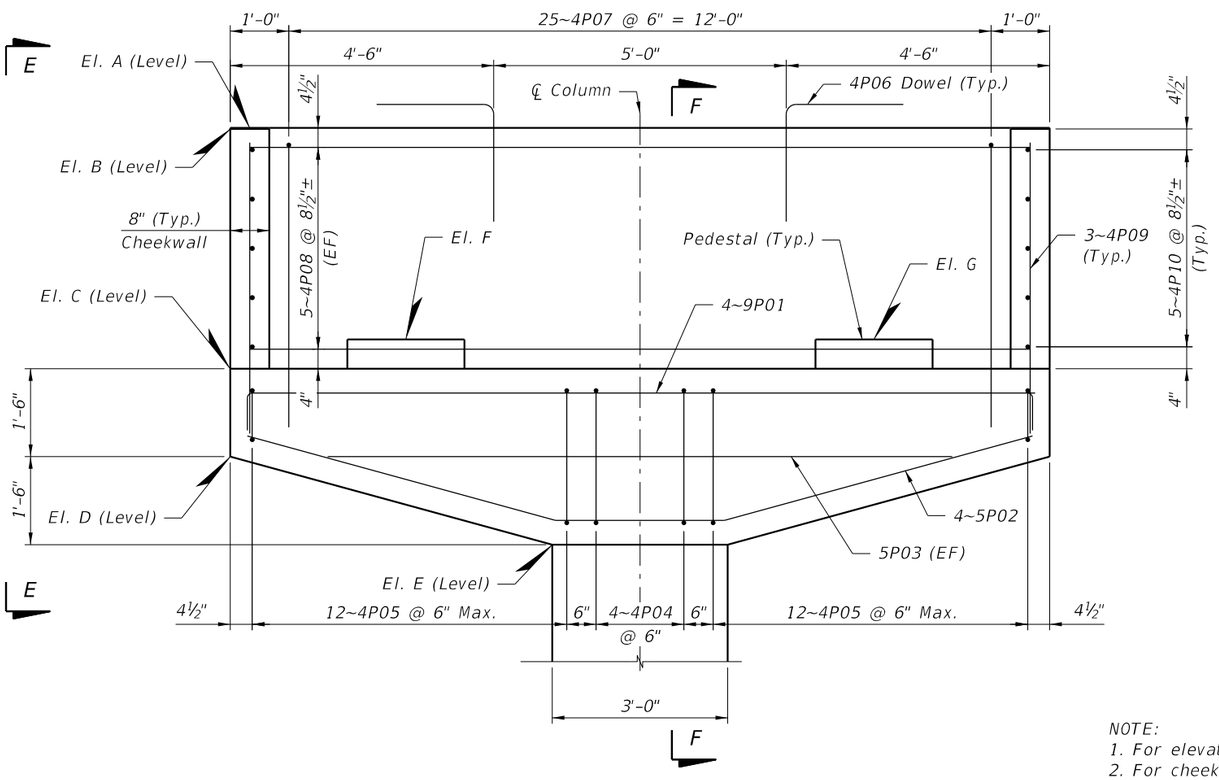


SECTION AT PIER

(Pier Column shown at 67'-0" Span)

NOTE:
1. For elevations, View E-E and Section F-F refer to B-14 sheet.
2. For cheekwall reinforcing refer to sheet B-14 for reinforcing details.

Direction of Stationing

| REVISIONS | | | | | |
|---|---|---|---|---|---|
| DATE | BY | DESCRIPTION | DATE | BY | DESCRIPTION |
| | | | | | |

Bhushan Godbole, P.E.
P.E. NO.: 54325
STV Incorporated
4345 Southpoint Blvd., Suite 200
Jacksonville, Florida 32216



DRAWN BY: HGD 06-25
CHECKED BY: MBH 06-25
DESIGNED BY: MBH 06-25
CHECKED BY: BAG 06-25

CITY OF JACKSONVILLE, FLORIDA
DEPARTMENT OF PUBLIC WORKS

PROJECT #: CDN 6256.484

SHEET TITLE: PIER 2 - COLUMN 1 CAP

PROJECT NAME: MODIFICATION OF NORTHBANK PEDESTRIAN BRIDGE OVER MCCOYS CREEK OUTFALL

REF. DWG. NO.

SHEET NO. B-11

NOTICE: THE OFFICIAL RECORD OF THIS SHEET IS THE ELECTRONIC FILE DIGITALLY SIGNED AND SEALED UNDER RULE 61G15-23.004, F.A.C.

Docusign Envelope ID: F54DB230-A150-452A-B3F0-14C4A48C193C

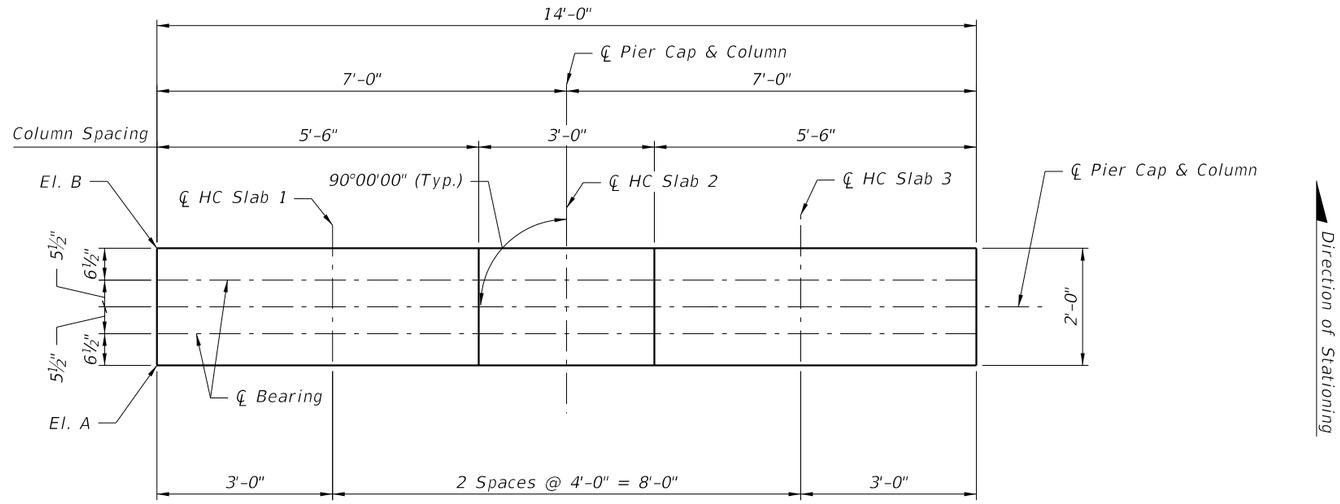


PLAN

Direction of Stationing

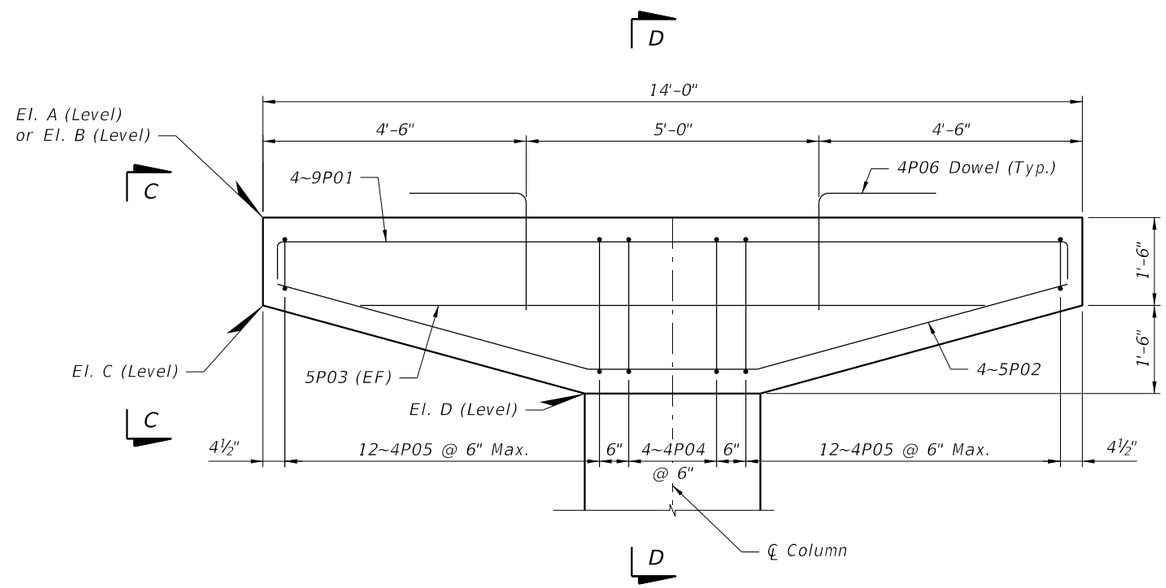


ELEVATION

(Pier Column shown at 30'-0" Span)

NOTE:
1. For elevations, View C-C and Section D-D refer to sheet B-13.

| REVISIONS | | | | | |
|---|---|---|---|---|---|
| DATE | BY | DESCRIPTION | DATE | BY | DESCRIPTION |
| | | | | | |

Bhushan Godbole, P.E.
P.E. NO.: 54325
STV Incorporated
4345 Southpoint Blvd., Suite 200
Jacksonville, Florida 32216



DRAWN BY: HGD 06-25
CHECKED BY: MBH 06-25
DESIGNED BY: MBH 06-25
CHECKED BY: BAG 06-25

CITY OF JACKSONVILLE, FLORIDA
DEPARTMENT OF PUBLIC WORKS

PROJECT #: CDN 6256.484

SHEET TITLE: PIER 2 - COLUMN 2 CAP

PROJECT NAME: MODIFICATION OF NORTHBANK PEDESTRIAN BRIDGE OVER MCCOYS CREEK OUTFALL

REF. DWG. NO.

SHEET NO. B-12

DangHG 8/22/2025 2:11:24 PM I:\Projects\4020666\4020666_2000\50_Deliverables & Submittals\Northbank ped bridge\struct\B1Pier04.dgn

NOTICE: THE OFFICIAL RECORD OF THIS SHEET IS THE ELECTRONIC FILE DIGITALLY SIGNED AND SEALED UNDER RULE 61G15-23.004, F.A.C.

Docusign Envelope ID: F54DB230-A150-452A-B3F0-14C4A48C193C

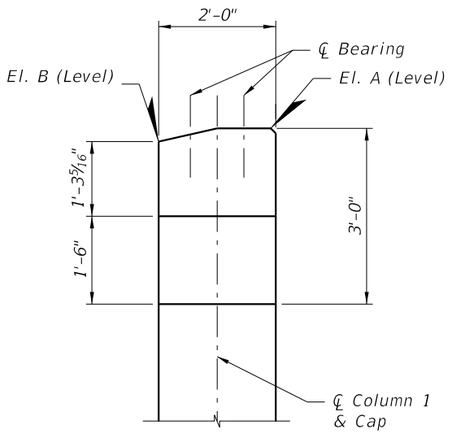


VIEW A-A
(Pier 1, Column 1)

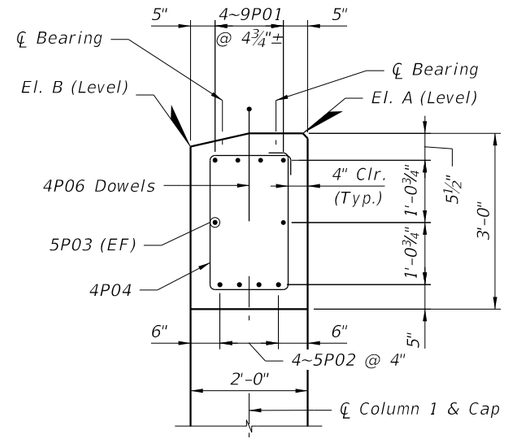


SECTION B-B
(Pier 1, Column 1)
(Column reinforcing not shown for clarity)

| Top of Cap Elevations - Piers | | |
|---|---|---|
| Location | Pier 1, Column 1 | Pier 2, Column 2 |
| El. A | 22.958 | 27.958 |
| El. B | 22.871 | 27.871 |
| El. C | 21.458 | 26.458 |
| El. D | 19.958 | 24.958 |

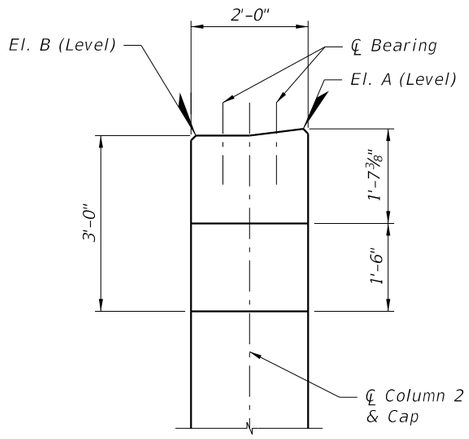


VIEW C-C
(Pier 2, Column 2)

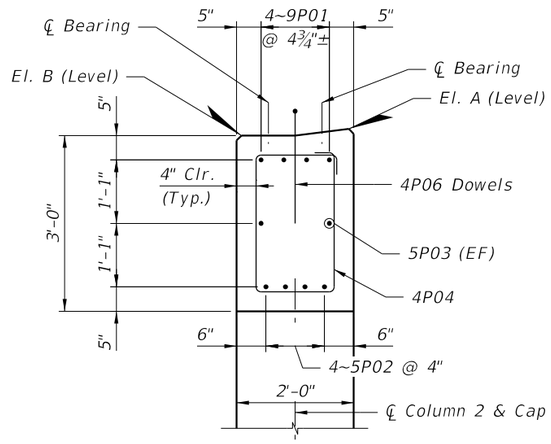


SECTION D-D
(Pier 2, Column 2)
(Column reinforcing not shown for clarity)

NOTE:
For column reinforcing refer to sheets B-15 and B-16.

| REVISIONS | | | | | |
|---|---|---|---|---|---|
| DATE | BY | DESCRIPTION | DATE | BY | DESCRIPTION |
| | | | | | |

Bhushan Godbole, P.E.
P.E. NO.: 54325
STV Incorporated
4345 Southpoint Blvd., Suite 200
Jacksonville, Florida 32216



DRAWN BY: HGD 06-25
CHECKED BY: MBH 06-25
DESIGNED BY: MBH 06-25
CHECKED BY: BAG 06-25

CITY OF JACKSONVILLE, FLORIDA
DEPARTMENT OF PUBLIC WORKS

PROJECT #: CDN 6256.484

SHEET TITLE: PIER CAP DETAILS (1 OF 2)

PROJECT NAME: MODIFICATION OF NORTHBANK PEDESTRIAN BRIDGE OVER MCCOYS CREEK OUTFALL

REF. DWG. NO.

SHEET NO. B-13

NOTICE: THE OFFICIAL RECORD OF THIS SHEET IS THE ELECTRONIC FILE DIGITALLY SIGNED AND SEALED UNDER RULE 61G15-23.004, F.A.C.

Docusign Envelope ID: F54DB230-A150-452A-B3F0-14C4A48C193C

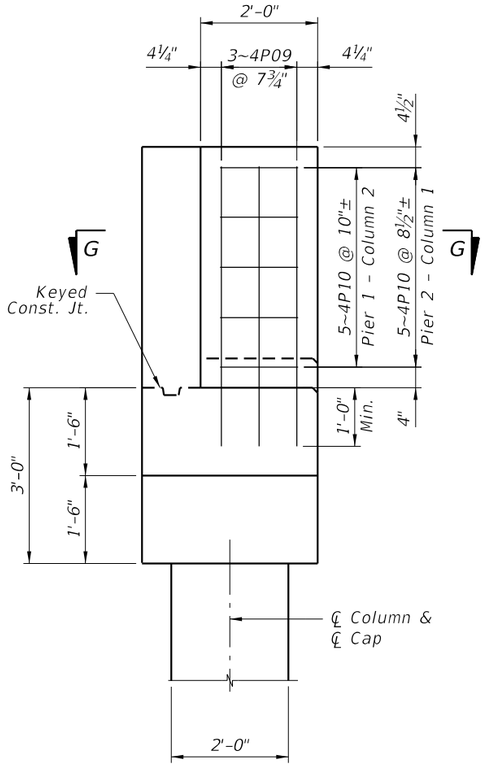


VIEW E-E

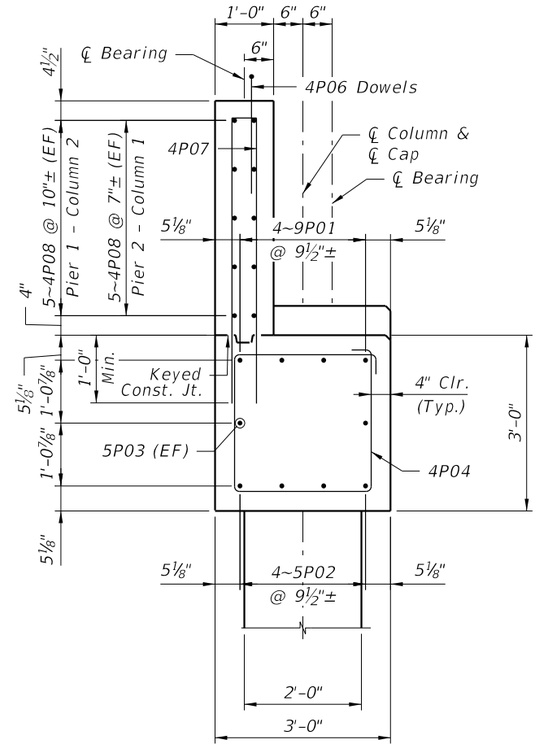


SECTION F-F
(Column reinforcing not shown for clarity)

| Top of Cap Elevations - Piers | | |
|---|---|---|
| Location | Pier 1, Column 2 | Pier 2, Column 1 |
| El. A | 23.083 | 27.958 |
| El. B | 22.958 | 27.958 |
| El. C | 18.971 | 24.399 |
| El. D | 17.471 | 22.899 |
| El. E | 15.971 | 21.399 |
| El. F | 19.471 | 24.899 |
| El. G | 19.471 | 24.899 |

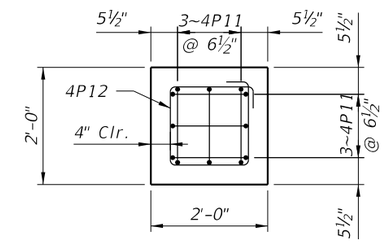


TYPICAL PEDESTAL PLAN

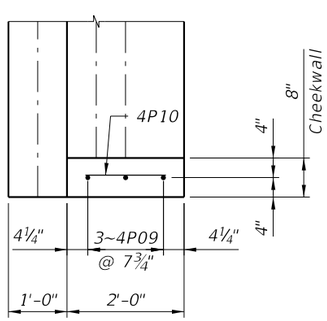


SECTION G-G

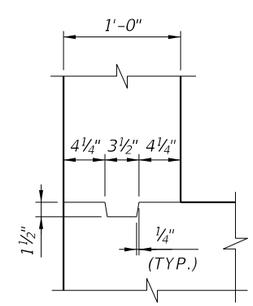


KEYED CONSTRUCTION
JOINT DETAIL

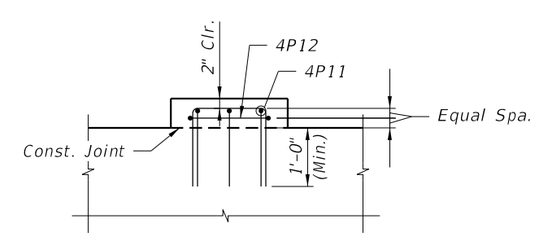


TYPICAL PEDESTAL ELEVATION

NOTE:
For column reinforcing refer to sheets B-15 and B-16.

| REVISIONS | | | | | |
|---|---|---|---|---|---|
| DATE | BY | DESCRIPTION | DATE | BY | DESCRIPTION |
| | | | | | |

Bhushan Godbole, P.E.
P.E. NO.: 54325
STV Incorporated
4345 Southpoint Blvd., Suite 200
Jacksonville, Florida 32216



DRAWN BY: HGD 06-25
CHECKED BY: MBH 06-25
DESIGNED BY: MBH 06-25
CHECKED BY: BAG 06-25

CITY OF JACKSONVILLE, FLORIDA
DEPARTMENT OF PUBLIC WORKS

PROJECT #: CDN 6256.484

SHEET TITLE: PIER CAP DETAILS (2 OF 2)

PROJECT NAME: MODIFICATION OF NORTHBANK PEDESTRIAN BRIDGE OVER MCCOYS CREEK OUTFALL

REF. DWG. NO.

SHEET NO. B-14

DangHG 8/22/2025 2:11:25 PM I:\Projects\4020666\4020666_2000\50_Deliverables & Submittals\Northbank ped bridge\struct\B1PierDet02.dgn

NOTICE: THE OFFICIAL RECORD OF THIS SHEET IS THE ELECTRONIC FILE DIGITALLY SIGNED AND SEALED UNDER RULE 61G15-23.004, F.A.C.

Docusign Envelope ID: F54DB230-A150-452A-B3F0-14C4A48C193C

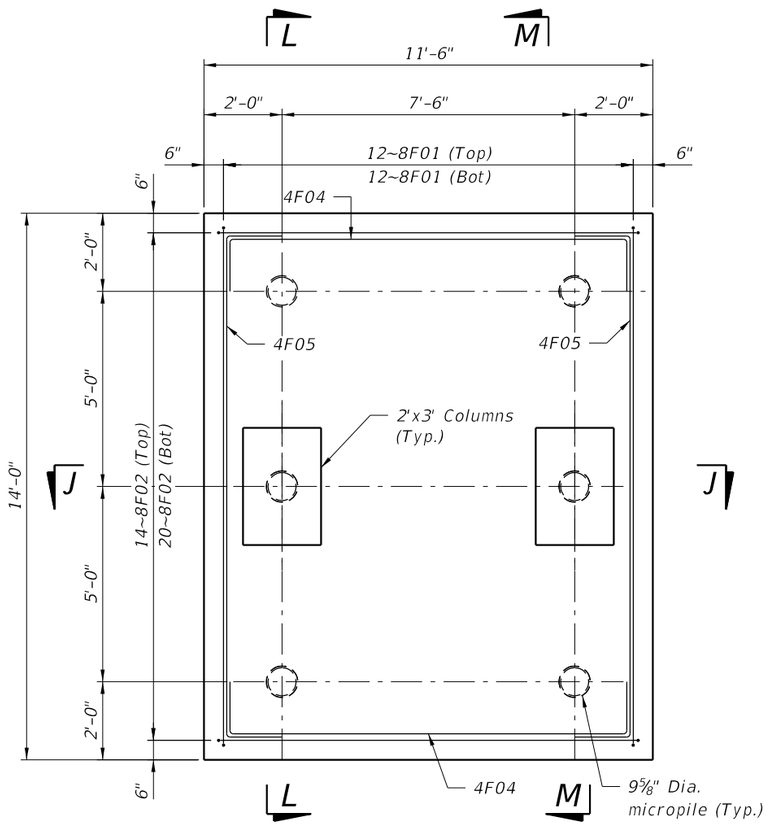


FOOTING PLAN

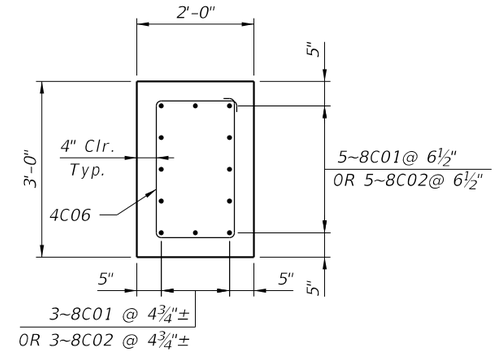


SECTION I-I

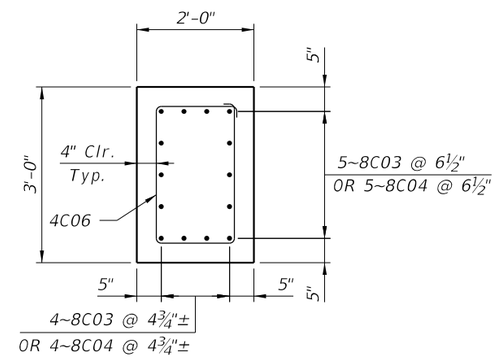


SECTION K-K

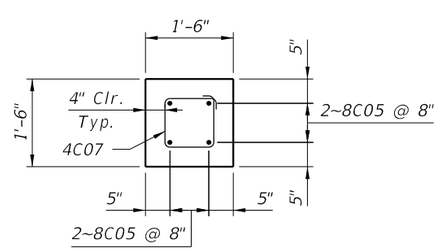


SECTION N-N

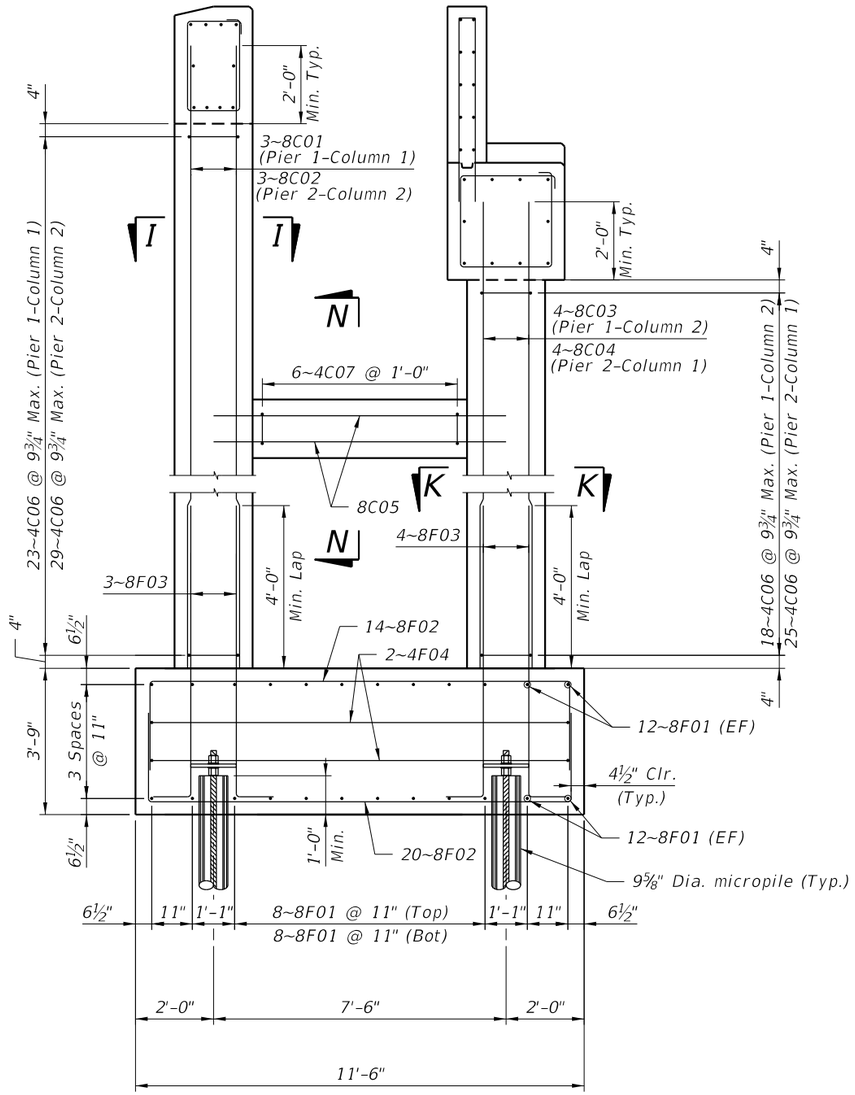


SECTION J-J

(Pier 1 – Columns 1 and 2 Shown, Pier 2 – Columns 1 and 2 Similar)

NOTES:
1. For Sections L-L and M-M, see sheet B-16.
2. Rotate bars 8F03 as required to fit.

| REVISIONS | | | | | |
|---|---|---|---|---|---|
| DATE | BY | DESCRIPTION | DATE | BY | DESCRIPTION |
| | | | | | |

Bhushan Godbole, P.E.
P.E. NO.: 54325
STV Incorporated
4345 Southpoint Blvd., Suite 200
Jacksonville, Florida 32216



DRAWN BY: HGD 06-25
CHECKED BY: MBH 06-25
DESIGNED BY: MBH 06-25
CHECKED BY: BAG 06-25

CITY OF JACKSONVILLE, FLORIDA
DEPARTMENT OF PUBLIC WORKS

PROJECT #: CDN 6256.484

SHEET TITLE: COLUMN & FOOTING DETAILS (1 OF 2)

PROJECT NAME: MODIFICATION OF NORTHBANK PEDESTRIAN BRIDGE OVER MCCOYS CREEK OUTFALL

REF. DWG. NO.

SHEET NO. B-15

NOTICE: THE OFFICIAL RECORD OF THIS SHEET IS THE ELECTRONIC FILE DIGITALLY SIGNED AND SEALED UNDER RULE 61G15-23.004, F.A.C.

Docusign Envelope ID: F54DB230-A150-452A-B3F0-14C4A48C193C

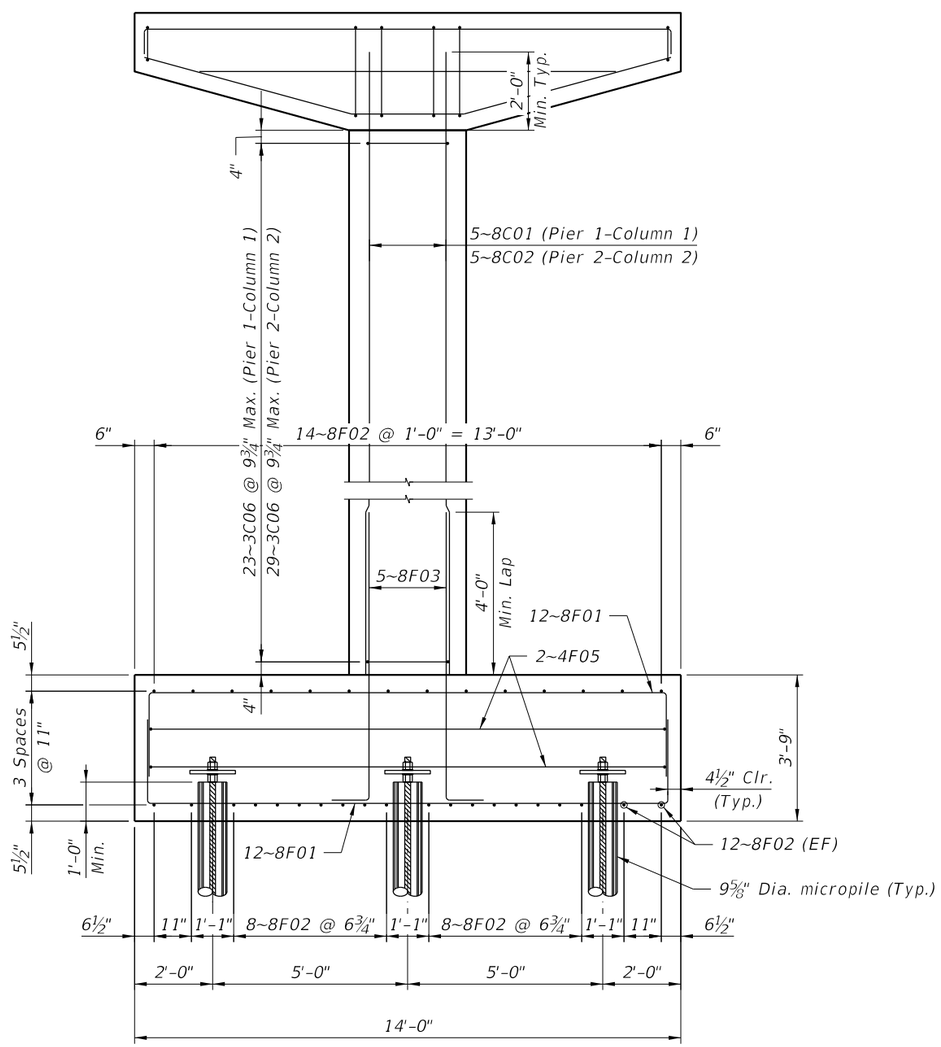


## SECTION L-L

Pier 1 – Column 1 Shown, Pier 2 – Column 2 Similar

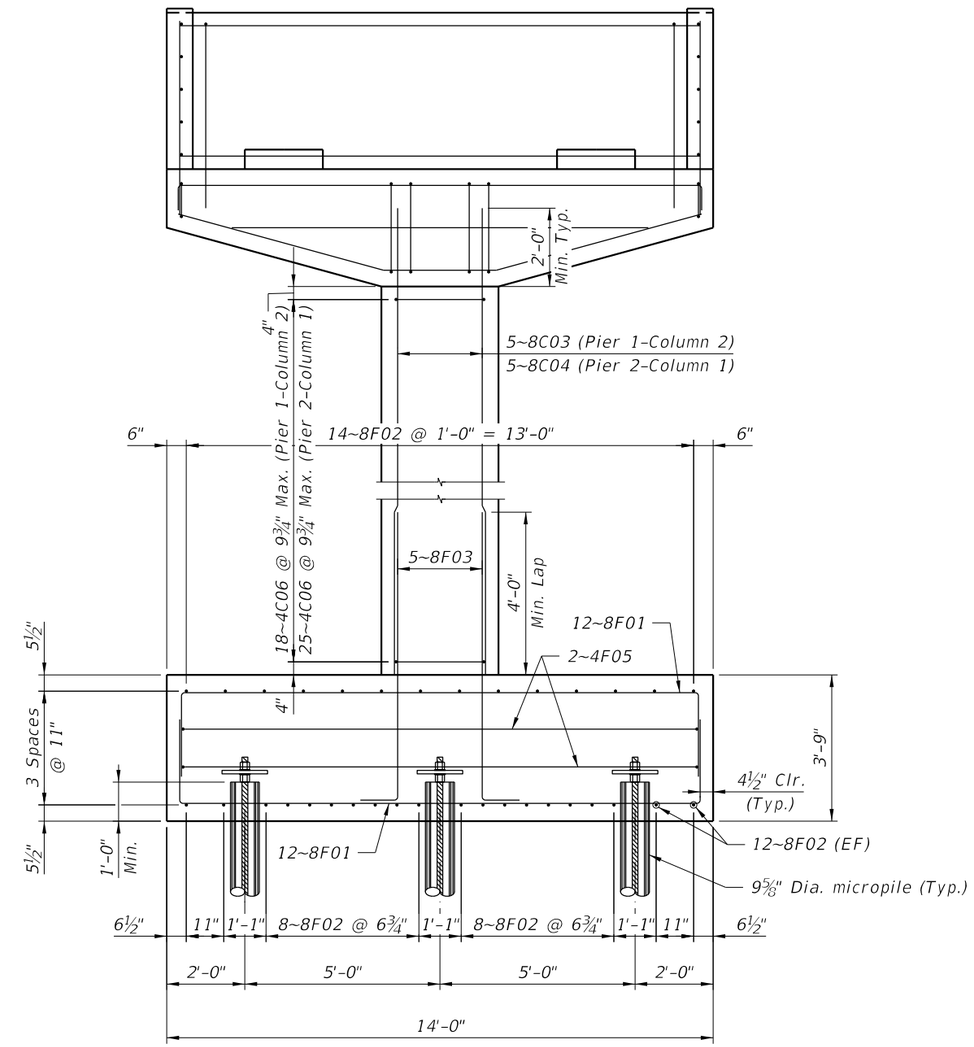


## SECTION M-M

Pier 1– Column 2 Shown, Pier 2 – Column 1 Similar

| REVISIONS | | | | | |
|---|---|---|---|---|---|
| DATE | BY | DESCRIPTION | DATE | BY | DESCRIPTION |
| | | | | | |

Bhushan Godbole, P.E.
P.E. NO.: 54325
STV Incorporated
4345 Southpoint Blvd., Suite 200
Jacksonville, Florida 32216



DRAWN BY: HGD 06-25
CHECKED BY: MBH 06-25
DESIGNED BY: MBH 06-25
CHECKED BY: BAG 06-25

CITY OF JACKSONVILLE, FLORIDA
DEPARTMENT OF PUBLIC WORKS

PROJECT #: CDN 6256.484

SHEET TITLE: COLUMN & FOOTING DETAILS (2 OF 2)

PROJECT NAME: MODIFICATION OF NORTHBANK PEDESTRIAN BRIDGE OVER MCCOYS CREEK OUTFALL

REF. DWG. NO.

SHEET NO. B-16

DangHG 8/22/2025 2:11:27 PM I:\Projects\4020666\4020666_2000\50_Deliverables & Submittals\Northbank ped bridge\struct\B1FootingDet02.dgn

NOTICE: THE OFFICIAL RECORD OF THIS SHEET IS THE ELECTRONIC FILE DIGITALLY SIGNED AND SEALED UNDER RULE 61G15-23.004, F.A.C.

Docusign Envelope ID: F54DB230-A150-452A-B3F0-14C4A48C193C

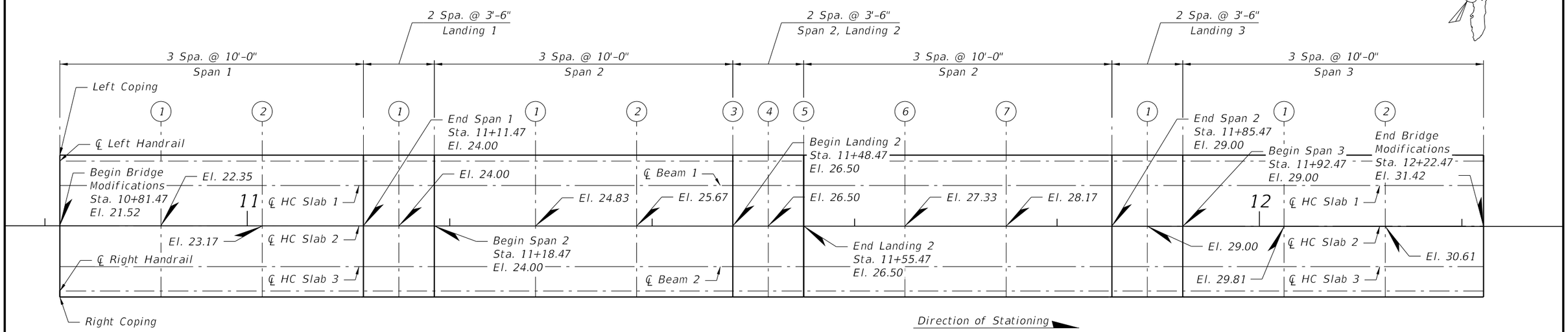


FINISH GRADE PLAN

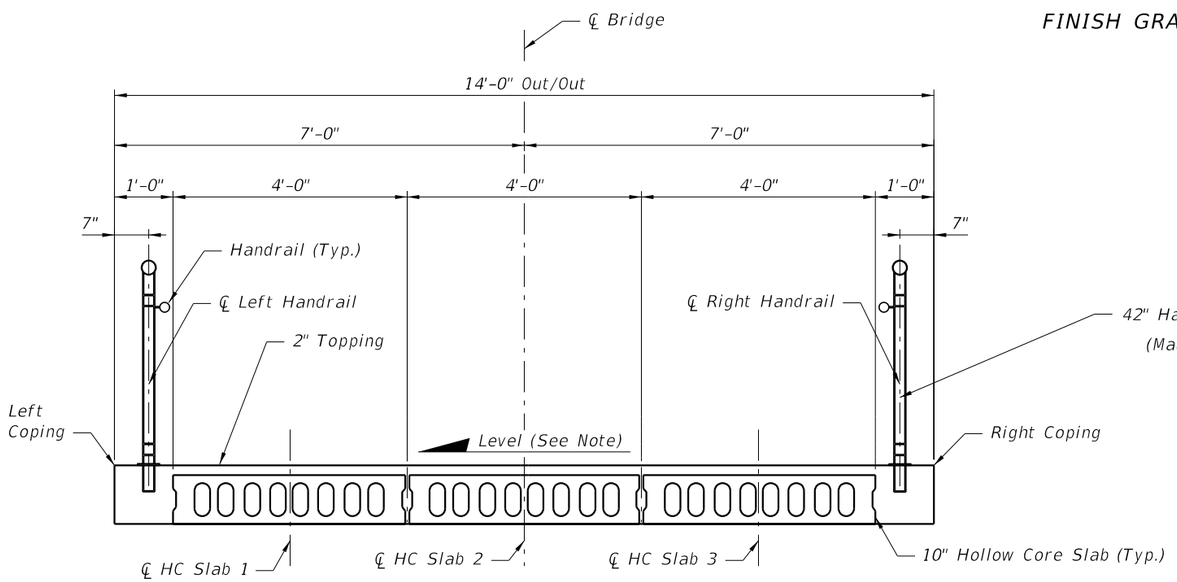


TYPICAL SECTION AT SPANS 1 & 3
AND LANDINGS 1 & 3

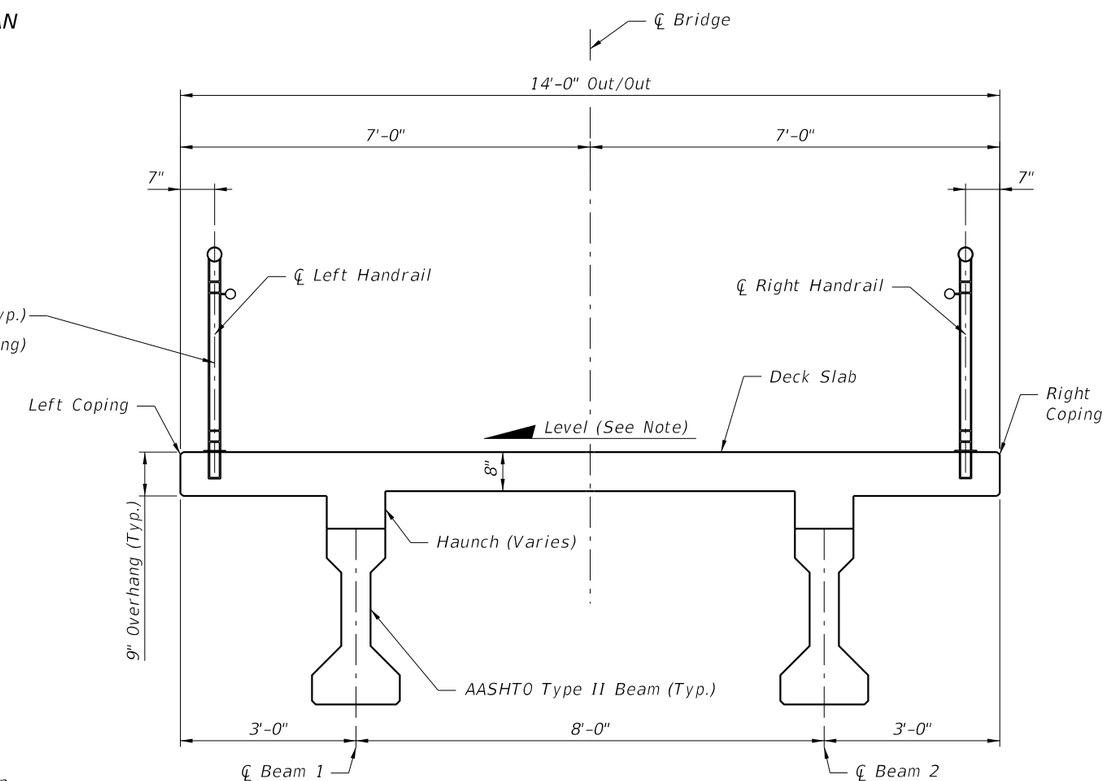


TYPICAL SECTION AT SPAN 2

NOTE:
Finish landing areas to provide positive slope to drain from center to the outside perimeter edge.

| REVISIONS | | | | | |
|---|---|---|---|---|---|
| DATE | BY | DESCRIPTION | DATE | BY | DESCRIPTION |
| | | | | | |

Bhushan Godbole, P.E.
P.E. NO.: 54325
STV Incorporated
4345 Southpoint Blvd., Suite 200
Jacksonville, Florida 32216



DRAWN BY: HGD 06-25
CHECKED BY: MBH 06-25
DESIGNED BY: MBH 06-25
CHECKED BY: BAG 06-25

CITY OF JACKSONVILLE, FLORIDA
DEPARTMENT OF PUBLIC WORKS

PROJECT # CDN 6256.484

SHEET TITLE: FINISH GRADE ELEVATIONS

PROJECT NAME: MODIFICATION OF NORTHBANK PEDESTRIAN BRIDGE OVER MCCOYS CREEK OUTFALL

REF. DWG. NO.

SHEET NO. B-17

DangHG 8/22/2025 2:11:28 PM I:\Projects\4020666\4020666_2000\50_Deliverables & Submittals\Northbank ped bridge\struct\B1FinishGrEL01.dgn

NOTICE: THE OFFICIAL RECORD OF THIS SHEET IS THE ELECTRONIC FILE DIGITALLY SIGNED AND SEALED UNDER RULE 61G15-23.004, F.A.C.

Docusign Envelope ID: F54DB230-A150-452A-B3F0-14C4A48C193C

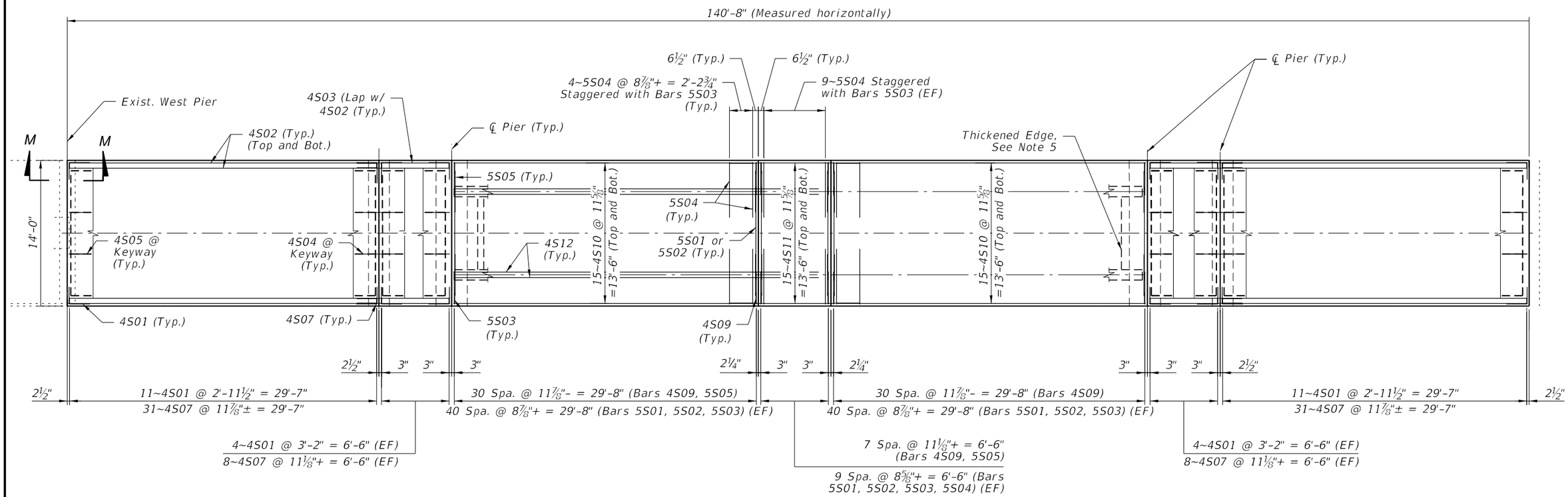


PLAN

## NOTES:

1. See Superstructure Section and Superstructure Details for additional Information.
2. For expansion joint information, see Superstructure Details.
3. No. 4 Min. Lap Splice = 1'-4"
4. 10" Hollow Core Slab with 2" Topping reinforced with 4x4-W4xW4 Welded Wire Fabric at mid height of topping, Typ.
5. For Thickened Edge reinforcement, see Superstructure Details (2 of 2)
6. Dimension measured along CL Bridge account for the superstructure slopes UON.

| REVISIONS | | | | | |
|---|---|---|---|---|---|
| DATE | BY | DESCRIPTION | DATE | BY | DESCRIPTION |
| | | | | | |

Bhushan Godbole, P.E.
P.E. NO.: 54325
STV Incorporated
4345 Southpoint Blvd., Suite 200
Jacksonville, Florida 32216



DRAWN BY: HGD 06-25
CHECKED BY: MBH 06-25
DESIGNED BY: MBH 06-25
CHECKED BY: BAG 06-25

CITY OF JACKSONVILLE, FLORIDA
DEPARTMENT OF PUBLIC WORKS

PROJECT #: CDN 6256.484

SHEET TITLE: SUPERSTRUCTURE PLAN

PROJECT NAME: MODIFICATION OF NORTHBANK PEDESTRIAN BRIDGE OVER MCCOYS CREEK OUTFALL

REF. DWG. NO.

SHEET NO. B-18



NOTICE: THE OFFICIAL RECORD OF THIS SHEET IS THE ELECTRONIC FILE DIGITALLY SIGNED AND SEALED UNDER RULE 61G15-23.004, F.A.C.

Docusign Envelope ID: F54DB230-A150-452A-B3F0-14C4A48C193C

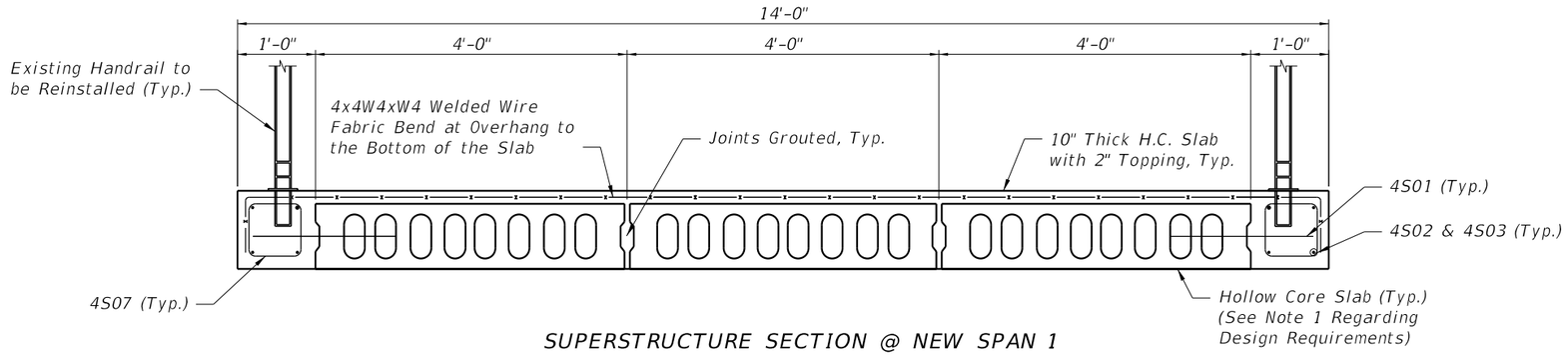


SUPERSTRUCTURE SECTION @ NEW SPAN 1

(Span 3 Similar)

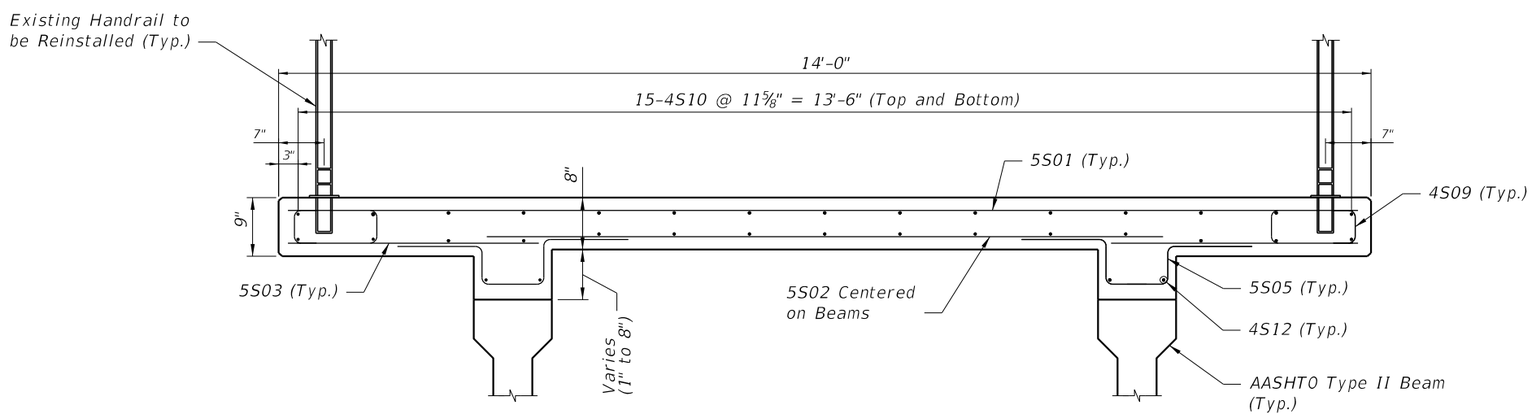


SUPERSTRUCTURE SECTION @ NEW SPAN 2

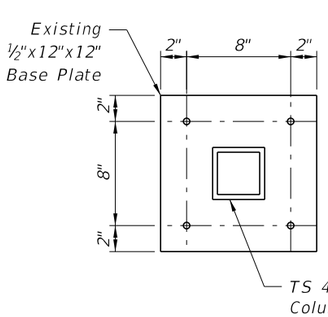


EXISTING BASE PLATE DETAIL

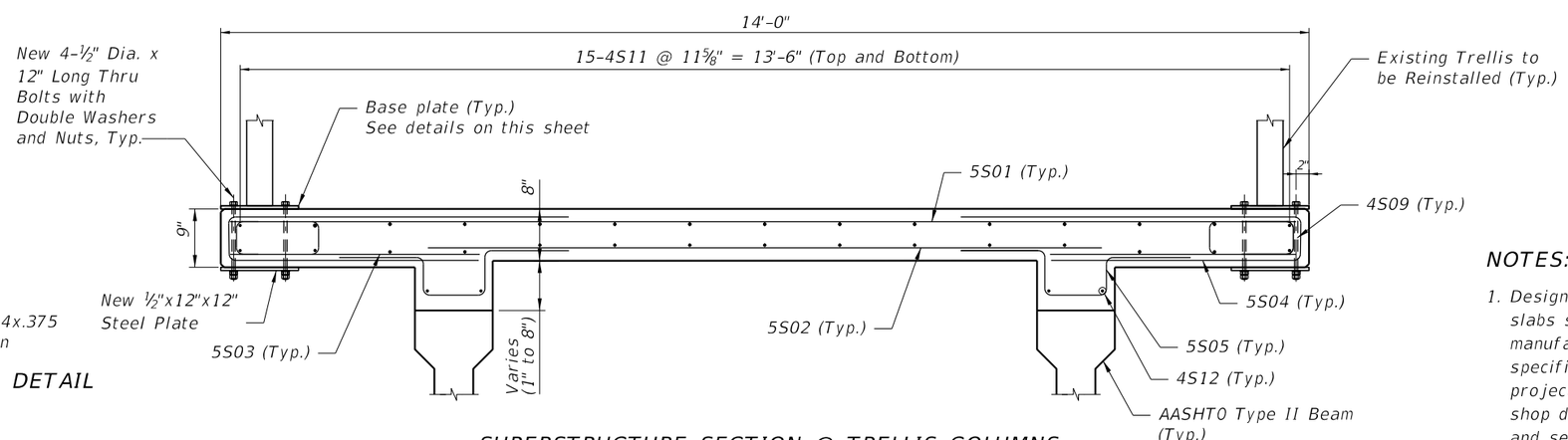


SUPERSTRUCTURE SECTION @ TRELLIS COLUMNS

## NOTES:

1. Design of the Precast Hollow-Core or equal slabs shall be performed by a pre-cast manufacturer using loads and design specifications herein, in accordance with project standards and requirements. Submit shop drawings and design calculations signed and sealed by an engineer registered in the State of Florida to the Engineer of Record for review and approval prior to fabrication.
2. New Base Plate to Match Existing.

| REVISIONS | | | | | |
|---|---|---|---|---|---|
| DATE | BY | DESCRIPTION | DATE | BY | DESCRIPTION |
| | | | | | |

Bhushan Godbole, P.E.
P.E. NO.: 54325
STV Incorporated
4345 Southpoint Blvd., Suite 200
Jacksonville, Florida 32216



DRAWN BY: HGD 06-25
CHECKED BY: MBH 06-25
DESIGNED BY: MBH 06-25
CHECKED BY: BAG 06-25

CITY OF JACKSONVILLE, FLORIDA
DEPARTMENT OF PUBLIC WORKS

PROJECT #: CDN 6256.484

SHEET TITLE: SUPERSTRUCTURE SECTIONS

PROJECT NAME: MODIFICATION OF NORTHBANK PEDESTRIAN BRIDGE OVER MCCOYS CREEK OUTFALL

REF. DWG. NO.

SHEET NO. B-19

DangHG 8/22/2025 2:11:30 PM I:\Projects\4020666\4020666_2000\50_Deliverables & Submittals\Northbank ped bridge\struct\B1BridgeSection01.dgn

NOTICE: THE OFFICIAL RECORD OF THIS SHEET IS THE ELECTRONIC FILE DIGITALLY SIGNED AND SEALED UNDER RULE 61G15-23.004, F.A.C.

Docusign Envelope ID: F54DB230-A150-452A-B3F0-14C4A48C193C

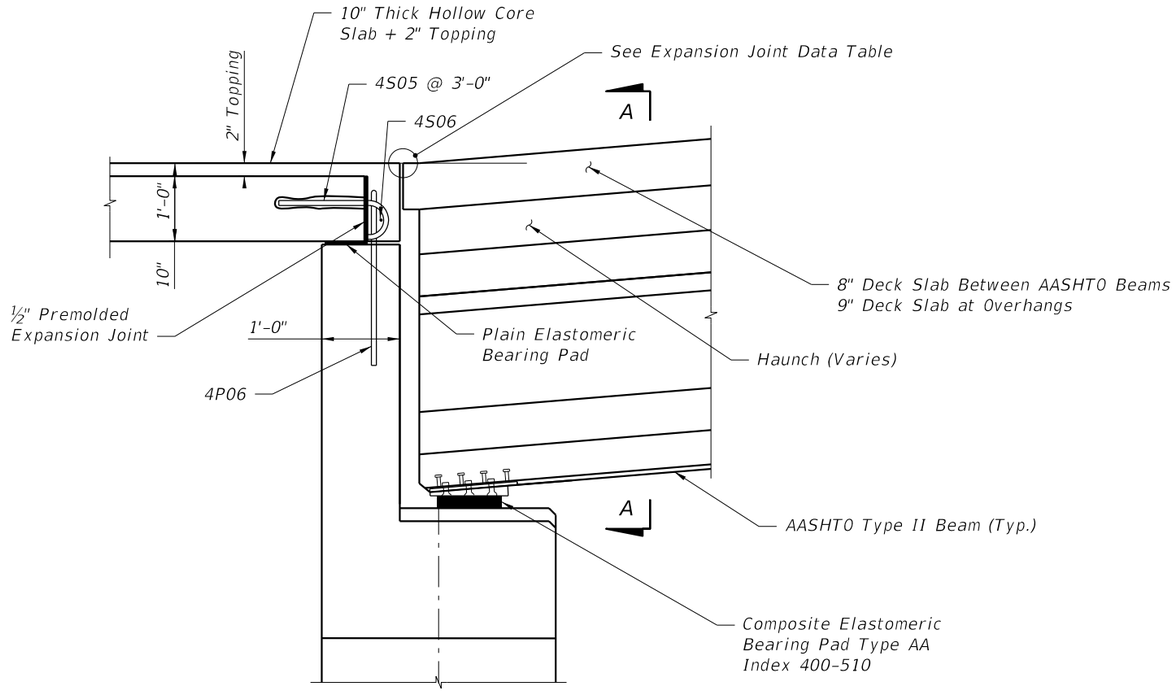


SECTION AT PIER 1 COLUMN 2

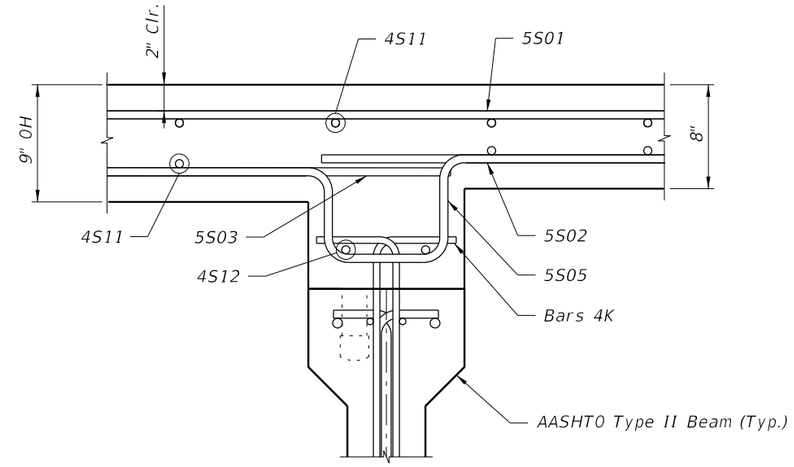


SECTION A-A

| POURED EXPANSION JOINT DATA TABLE INDEX 458-110 | | | Table Date 1-01-09 |
|---|---|---|---|
| LOCATION | DIM. "A" @ 70°F | TOTAL DESIGN MOVEMENT | DIM. "A" ADJUSTMENT PER 10°F |
| Pier 1 Col. 2 & Pier 2 Col. 1 | 1" | ⅛" | 0.013" |

NOTE:
Dim. "A" adjustment per 10°F shown is measured perpendicular to ℄ Expansion Joint. Work this table with Standard Plans Index 458-110.

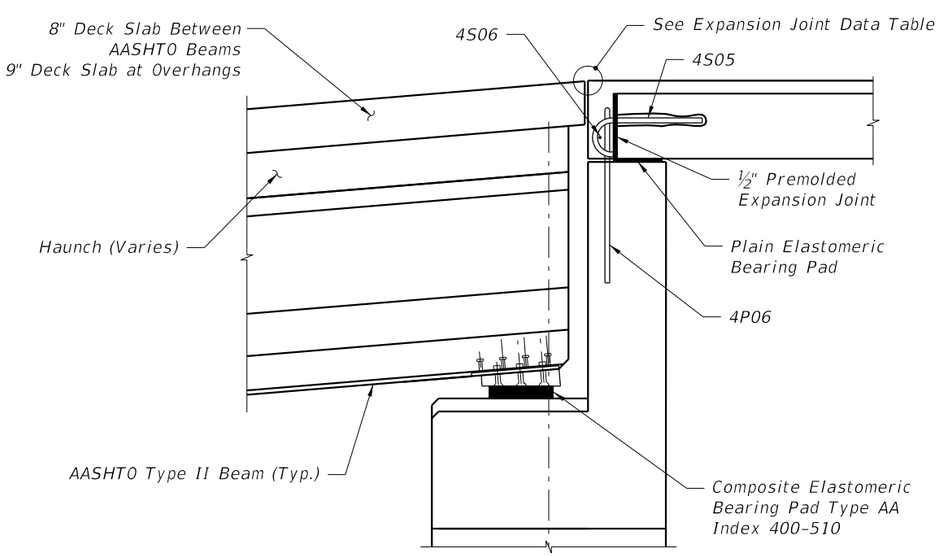


SECTION AT PIER 2 COLUMN 1

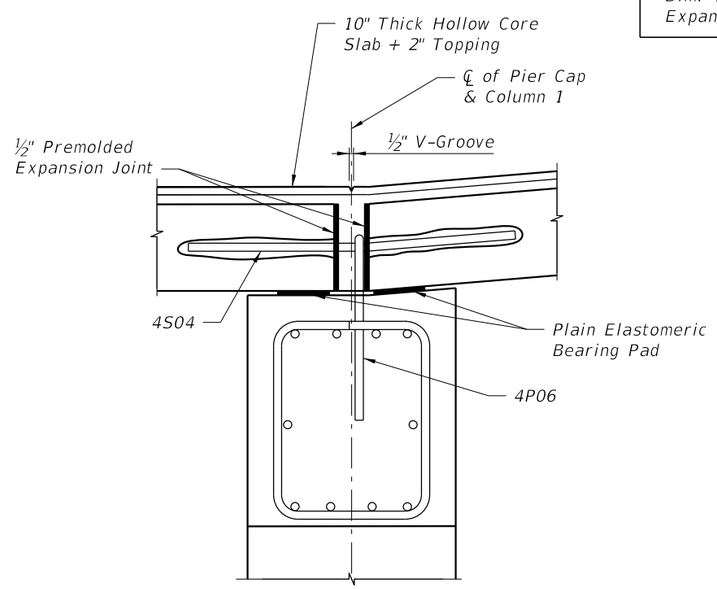


SECTION AT PIER 2 COLUMN 2

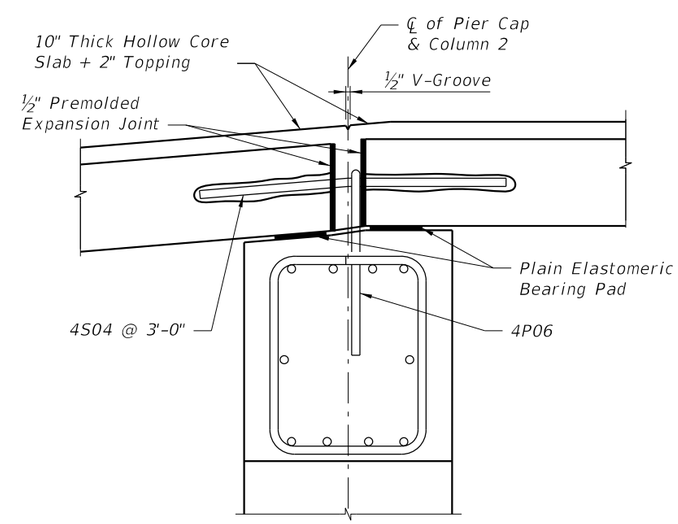


SECTION AT PIER 1 COLUMN 1

| REVISIONS | | | | | |
|---|---|---|---|---|---|
| DATE | BY | DESCRIPTION | DATE | BY | DESCRIPTION |
| | | | | | |

Bhushan Godbole, P.E.
P.E. NO.: 54325
STV Incorporated
4345 Southpoint Blvd., Suite 200
Jacksonville, Florida 32216



DRAWN BY: HGD 06-25
CHECKED BY: MBH 06-25
DESIGNED BY: MBH 06-25
CHECKED BY: BAG 06-25

CITY OF JACKSONVILLE, FLORIDA
DEPARTMENT OF PUBLIC WORKS

PROJECT #: CDN 6256.484

SHEET TITLE: SUPERSTRUCTURE DETAILS (1 OF 2)

PROJECT NAME: MODIFICATION OF NORTHBANK PEDESTRIAN BRIDGE OVER MCCOYS CREEK OUTFALL

REF. DWG. NO.

SHEET NO. B-20

DangHG 8/22/2025 2:11:31 PM I:\Projects\4020666\4020666_2000\50_Deliverables & Submittals\Northbank ped bridge\struct\B1SuperstDet01.DGN

NOTICE: THE OFFICIAL RECORD OF THIS SHEET IS THE ELECTRONIC FILE DIGITALLY SIGNED AND SEALED UNDER RULE 61G15-23.004, F.A.C.

Docusign Envelope ID: F54DB230-A150-452A-B3F0-14C4A48C193C

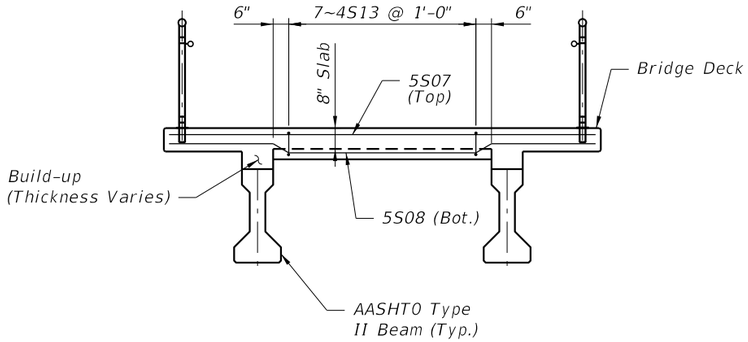


SECTION K-K

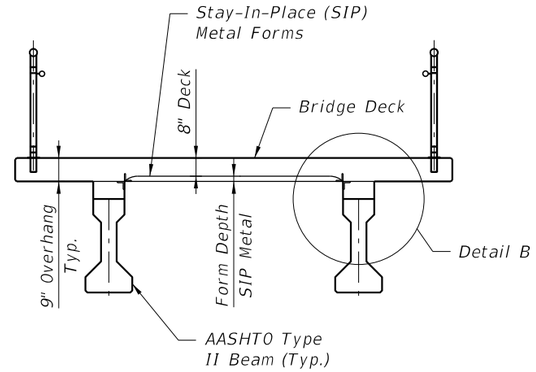


SECTION THRU SUPERSTRUCTURE
(Deck Reinforcement not shown for clarity)

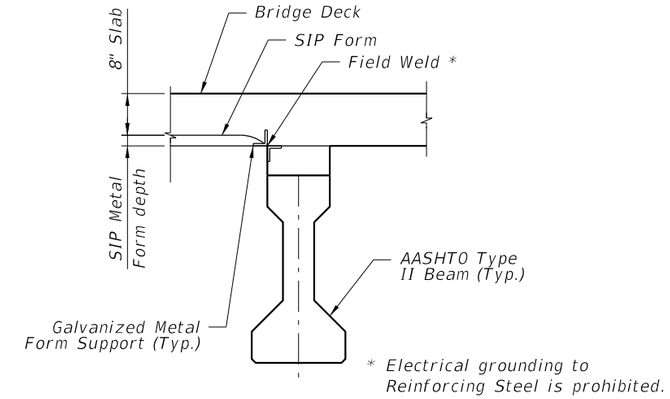


DETAIL "B"

STAY-IN-PLACE METAL FORM DETAILS

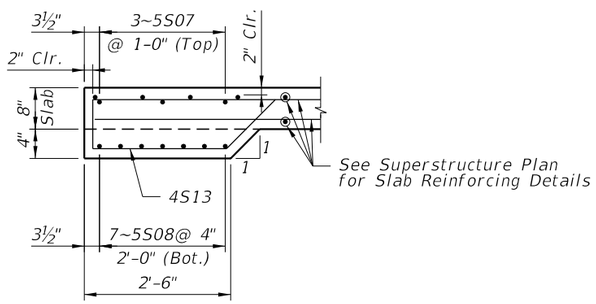


SECTION L-L

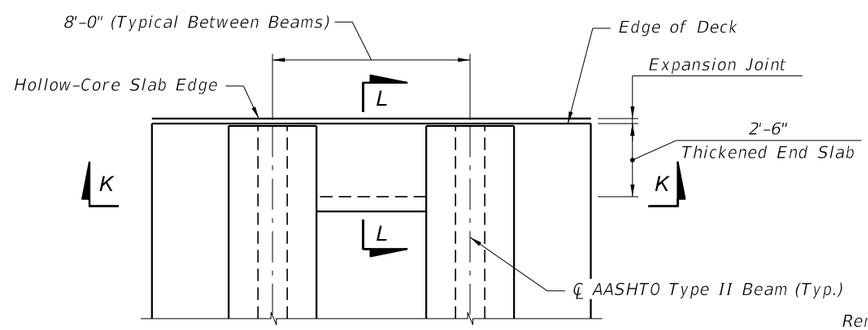


PARTIAL PLAN AT THICKENED END SLAB
(Reinforcement not shown for clarity)

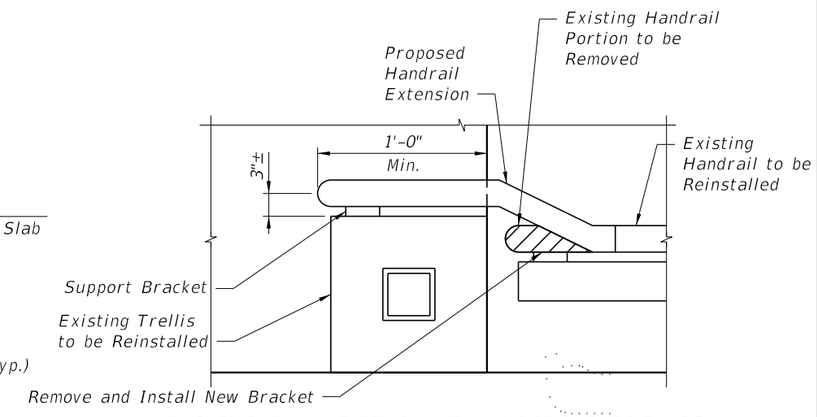


RAILING PLAN DETAIL AT LANDING 2 TRELLIS

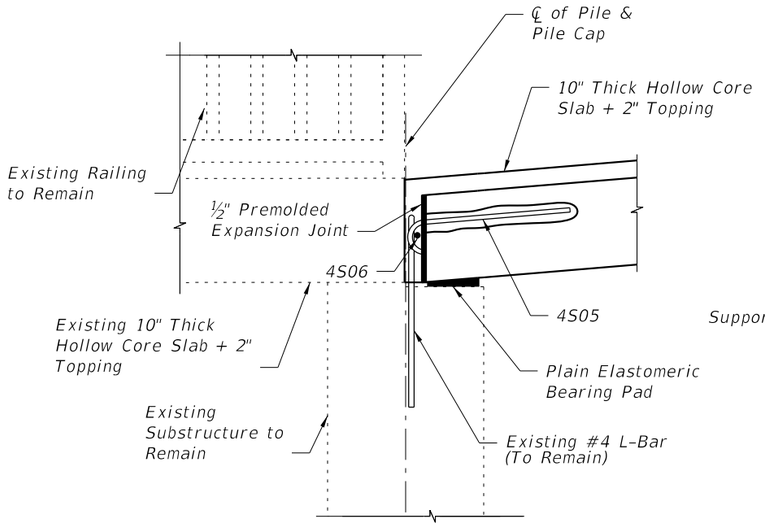


SECTION M-M

RAILING ELEVATION VIEW AT LANDING 1 & 3

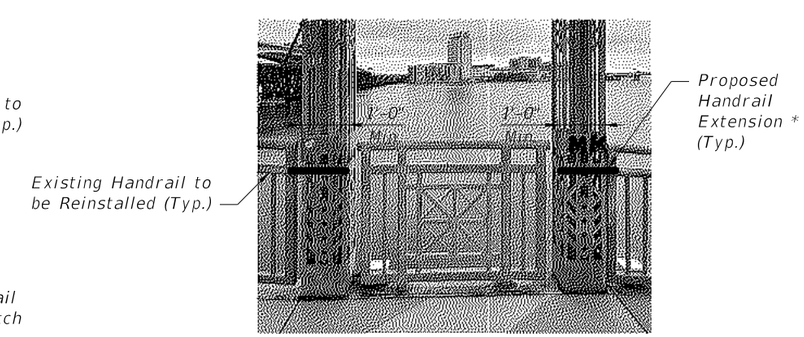


RAILING ELEVATION VIEW AT LANDING 2

* Note: Submit shop drawings for new portions of graspable handrail and attachments to match existing for approval prior to fabrication and installation.

| REVISIONS | | | | | |
|---|---|---|---|---|---|
| DATE | BY | DESCRIPTION | DATE | BY | DESCRIPTION |
| | | | | | |

Bhushan Godbole, P.E.
P.E. NO.: 54325
STV Incorporated
4345 Southpoint Blvd., Suite 200
Jacksonville, Florida 32216



| | |
|---|---|
| DRAWN BY: | HGD 06-25 |
| CHECKED BY: | MBH 06-25 |
| DESIGNED BY: | MBH 06-25 |
| CHECKED BY: | BAG 06-25 |

CITY OF JACKSONVILLE, FLORIDA
DEPARTMENT OF PUBLIC WORKS

PROJECT #: CDN 6256.484

SHEET TITLE: SUPERSTRUCTURE DETAILS (2 OF 2)

REF. DWG. NO.:

PROJECT NAME: MODIFICATION OF NORTHBANK PEDESTRIAN BRIDGE OVER MCCOYS CREEK OUTFALL

SHEET NO.: B-21

NOTICE: THE OFFICIAL RECORD OF THIS SHEET IS THE ELECTRONIC FILE DIGITALLY SIGNED AND SEALED UNDER RULE 61G15-23.004, F.A.C.

Docusign Envelope ID: F54DB230-A150-452A-B3F0-14C4A48C193C

## AASHTO TYPE II BEAM - TABLE OF BEAM VARIABLES

Table Date 01-01-16

| LOCATION | | CONCRETE PROPERTIES | | | STND. | END | PLAN VIEW CASE | | BRG. PLATE MARK *** | | END OF BEAM & BEARING DIMENSIONS ** | | | | | | BEAM DIMENSIONS * | | REINFORCING STEEL | | | | | | | | | | | | |
|---|---|---|---|---|---|---|---|---|---|---|---|---|---|---|---|---|---|---|---|---|---|---|---|---|---|---|---|---|---|---|---|
| SPAN | BEAM | CLASS | STRENGTHS (psi) | | PTRN. | ELEV. | | | | | ANGLE Ø | | DIM P | DIM J | DIM K1 | DIM K2 | | | 3D1 | | 3D2 | | 4K | NO. OF SPACES BARS 4K | | | | SPACING BARS 4K * | | | |
| NO. | NO. | | 28 Day | Release | TYPE | COND. | END 1 | END 2 | END 1 | END 2 | END 1 | END 2 | | | | | DIM L | DIM R | B | Length | B | Length | NO. | S1 | S2 | S3 | S4 | V1 | V2 | V3 | V4 |
| 2 | 1,2 | VI | 8,500 | 6,800 | 1 | 2 | 1 | 1 | P1 | P2 | 90° | 90° | 2⅝" | 9" | 1'-0" | 1'-0" | 66'-9⅛" | ⅜" | 1'-2" | 4'-0" | 1'-2" | 4'-0" | 93 | 7 | 26 | 0 | 1 | 6" | 12" | 0 | 8⅜" |

NOTE: Work this sheet with Standard Plans Index 450-120.

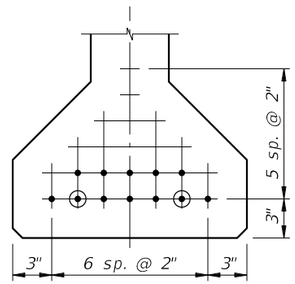


TYPE 1 12 STRANDS

STRAND DESCRIPTION: Use 6/10" Diameter, Grade 270, Low Relaxation Carbon Steel Strands stressed at 43.9 kips each. Area per strand equals 0.217 sq. in.

STRAND PATTERN

### STRAND DEBONDING LEGEND

• - fully bonded strands.

⦿ - strands debonded 6'-0" from end of beam.

NOTE: On beams with skewed ends the debonded length shall be measured along the debonded strand.

### DIMENSION NOTES

* All longitudinal beam dimensions shown on this sheet with a single asterisk (*) are measured along the top of beam at the centerline of beam.

** End of beam bearing dimensions "J" and "K" are measured along the bottom of the beam.

### BEARING PLATES

*** Mark indicates beveled bearing plate and embedded bearing plate required. See Index 450-511 or 450-512 for details.

PRESTRESSED BEAM STABILITY AND TEMPORARY BRACING NOTES:

1. Ensure beam stability and design temporary beam bracing, including connections, in accordance with the Specifications and the FDOT Structures Manual.
2. Construction:
   a. Evaluate the beam stability and bracing requirements against the design assumptions including:
      i. Loadings given in the plans.
      ii. Beam Camber (less than 6 inches) and Beam Sweep (in compliance with Specification 450 requirements).
      iii. Bearings given in the plans.
   b. Securely connect bracing to each beam. Do not allow the bracing to exert any vertical force on the outer edge of the top flange. Preform all bolt holes in beams and fill after use in accordance with the Specifications.

## TABLE OF PRESTRESSED I-BEAM TEMPORARY BRACING MINIMUM REQUIREMENTS AND LOADS

Table Date 8-05-15

| SPAN NO. | BEAM NO. | STAGE 1 | STAGE 2 | | | STAGE 3 | |
|---|---|---|---|---|---|---|---|
| | | BRACE ENDS PRIOR TO CRANE RELEASE?[1] (YES/NO) | TOTAL LINES OF BRACING[2,3,7] | MINIMUM NUMBER OF ADJACENT BEAMS ERECTED | HORIZONTAL LOAD AT EACH BRACE[4] (KIP) | TOTAL LINES OF BRACING[3,5,7] | OVERTURNING MOMENT AT EACH BRACE[6] (KIP-FT) |
| 2 | 1,2 | NO | 3 | 2 | 4.0 | 3 | 45.9 |

1. Anchor Bracing loads to be determined by the Contractor.
2. Total lines of Stage 2 bracing, including end bracing, are required to be installed within 24 hours after initial beam placement.
3. Equally space bracing along the length of the beams allowing for variations due to connection conflicts and skew.
4. LRFD Strength III loads applied to beam at brace point (see SDG 11.6).
5. Total lines of Stage 3 bracing, including end bracing, are required to be installed prior to deck placement.
6. LRFD Strength I overturning moment applied to beam at brace point (see SDG 11.6).
7. Submit shop drawings for temporary bracing plan including locations of preformed beam holes/inserts.

## BUILD-UP & DEFLECTION DATA TABLE FOR PRESTRESSED I-BEAMS

Table Date 07/01/17

| LOCATION | | REQUIRED THEORETICAL BUILD-UP OVER ℄ BEAM | | | | | NET BEAM CAMBER (PRESTRESS - DEAD LOAD OF BEAM) @ RELEASE | NET BEAM CAMBER (PRESTRESS - DEAD LOAD OF BEAM) @ 120 DAYS | DEAD LOAD DEFLECTION DURING DECK POUR @ 120 DAYS DIM A | BUILD-UP CASE NO. |
|---|---|---|---|---|---|---|---|---|---|---|
| SPAN NO. | BEAM NO. | AT BEGIN SPAN DIM B | AT BEGIN LANDING DIM C | AT END SPAN DIM D | AT END LANDING DIM E | AT END SPAN DIM F | | | | |
| 2 | 1,2 | 8⅜" | 7 9/16" | 4 1/16" | 9/16" | 1⅜" | 1 1/16" | 2 3/16" | 1 5/16" | Special |

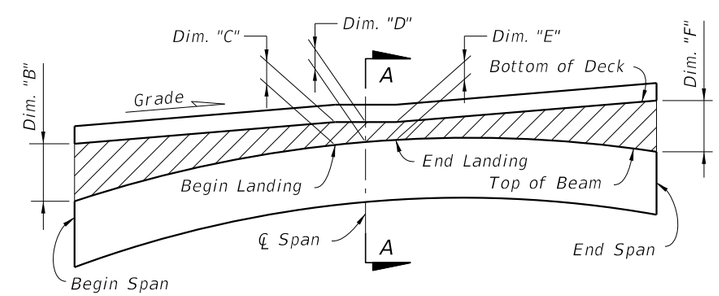


BUILD-UP DIAGRAM
(ALONG ℄ BEAM) (SPECIAL CASE)

NOTE:
For Section A-A, see Index 450-199.

| REVISIONS | | | | | |
|---|---|---|---|---|---|
| DATE | BY | DESCRIPTION | DATE | BY | DESCRIPTION |
| | | | | | |

Bhushan Godbole, P.E.
P.E. NO.: 54325
STV Incorporated
4345 Southpoint Blvd., Suite 400
Jacksonville, Florida 32216

DRAWN BY: HGD 06-25
CHECKED BY: MBH 06-25
DESIGNED BY: MBH 06-25
CHECKED BY: BAG 06-25

CITY OF JACKSONVILLE, FLORIDA
DEPARTMENT OF PUBLIC WORKS

PROJECT #: CDN 6256.484

SHEET TITLE: AASHTO TYPE II BEAM - TABLE OF BEAM VARIABLES

PROJECT NAME: MODIFICATION OF NORTHBANK PEDESTRIAN BRIDGE OVER MCCOYS CREEK OUTFALL

REF. DWG. NO.

SHEET NO. B-22



DangHG 8/22/2025 2:11:34 PM I:\Projects\4020666\4020666_2000\50_Deliverables & Submittals\Northbank ped bridge\struct\B1DataTableBeams01.dgn

NOTICE: THE OFFICIAL RECORD OF THIS SHEET IS THE ELECTRONIC FILE DIGITALLY SIGNED AND SEALED UNDER RULE 61G15-23.004, F.A.C.

Docusign Envelope ID: F54DB230-A150-452A-B3F0-14C4A48C193C

## BEARING PLATE DATA TABLE - TYPE 2

Table Date 7-01-13

| GENERAL BEARING PLATE DATA | | | | | | | BEVELED PLATE REQUIRED (Yes/No) | BEVELED PLATE DIMENSIONS (PLATE B) (inches) | | |
|---|---|---|---|---|---|---|---|---|---|---|
| BRG. PLATE MARK ** | SPAN NO(s). | BEAM NO(s). | PAD TYPE | BEAM END | PLAN VIEW CASE | SLOPE (%) * | | C | X | Y |
| P1 | 2 | 1,2 | AA | 1 | 1 | 8.76 | YES | 12 | 1 9/16 | 1/2 |
| P2 | 2 | 1,2 | AA | 2 | 1 | 7.90 | YES | 12 | 1/2 | 1 7/16 |

NOTES:
See Index 450-512 for additional notes and details.
Embedded Bearing Plate A dimensions are 1/2" x 1'-1 1/2" x 3'-0" for Florida-I Beams or 1/2" x 1'-1 1/2" x 1'-4" for AASHTO Type II Beams.
* Slope measured along ℄ of Beam at ℄ of Bearing.
** See "TABLE OF BEAM VARIABLES" and Index 450-010 for Florida-I Beams or Index 450-120 for AASHTO Type II Beams.

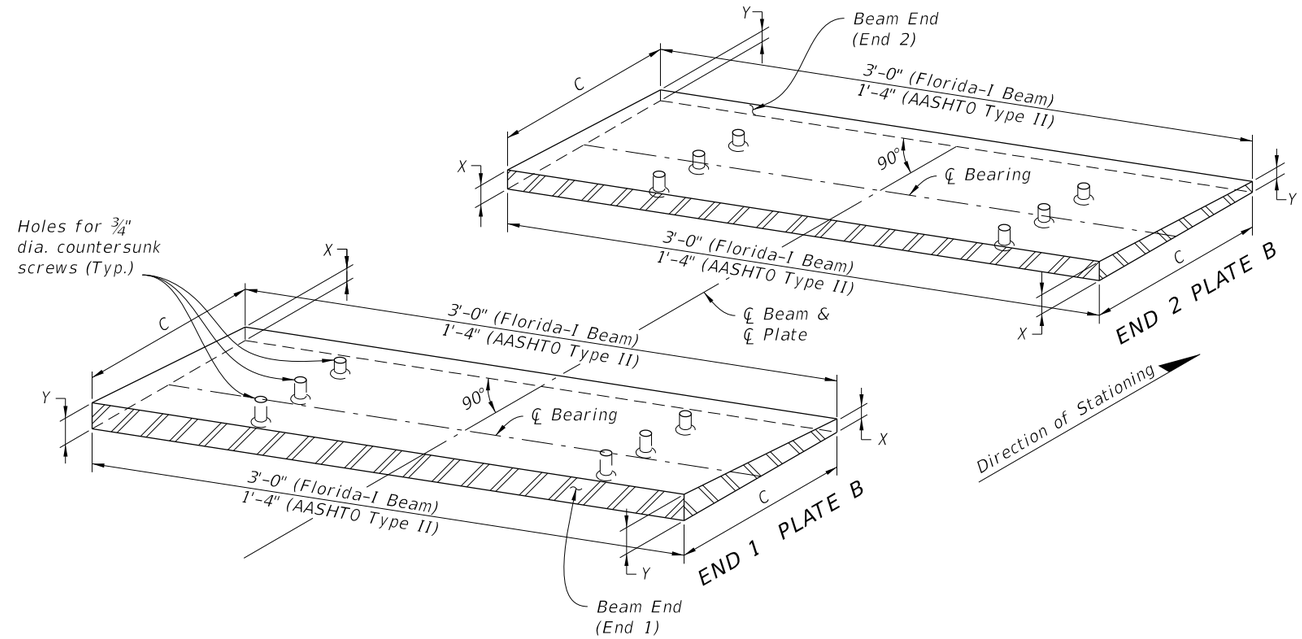


ISOMETRIC VIEW OF BEVELED BEARING PLATES (TYPE 2) FOR FLORIDA I-BEAMS
(AASHTO TYPE II BEAMS SIMILAR)

## BEARING PAD DATA TABLE

Table Date 7-01-13

| SPAN NO(s). | BEAM NO(s). | PAD TYPE | BEAM TYPE | BEAM END * |
|---|---|---|---|---|
| 1 | 1-3 | Special A | Hollow-Core Slab | 1 |
| 1 | 1-3 | Special B | Hollow-Core Slab | 2 |
| Landing 1 & 3 | 1-3 | Special B | Hollow-Core Slab | 1,2 |
| 2 | 1,2 | AA | AASHTO TYPE II | 1,2 |
| 3 | 1-3 | Special B | Hollow-Core Slab | 1 |
| 3 | 1-3 | Special A | Hollow-Core Slab | 2 |

NOTE:
Work this table with Index 400-510 for Pad Types AA, AB, D, E, F, G, H, J & K, and/or any project specific bearing pads.
* END 1 = Begin Bridge end of beam (Back station).
END 2 = End Bridge end of beam (Ahead station).

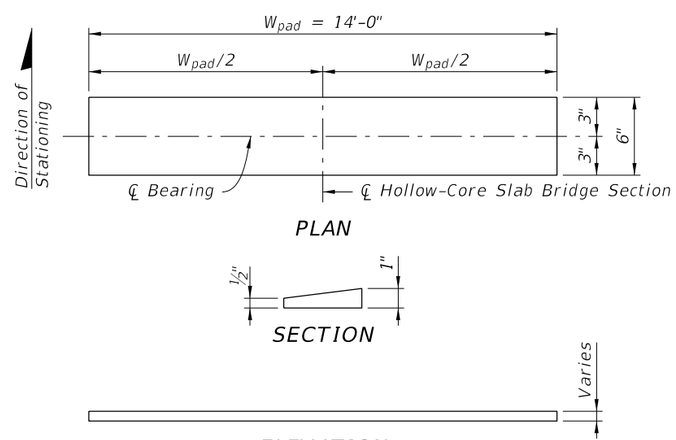


BEARING PAD DETAIL (SPECIAL A)

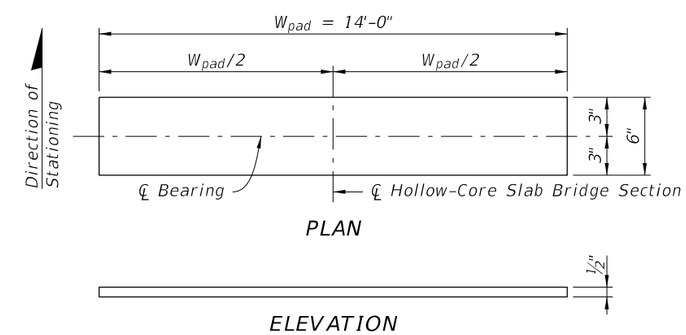


BEARING PAD DETAIL (SPECIAL B)

| REVISIONS | | | | | |
|---|---|---|---|---|---|
| DATE | BY | DESCRIPTION | DATE | BY | DESCRIPTION |
| | | | | | |

Bhushan Godbole, P.E.
P.E. NO.: 54325
STV Incorporated
4345 Southpoint Blvd., Suite 200
Jacksonville, Florida 32216



DRAWN BY: HGD 06-25
CHECKED BY: MBH 06-25
DESIGNED BY: MBH 06-25
CHECKED BY: BAG 06-25

CITY OF JACKSONVILLE, FLORIDA
DEPARTMENT OF PUBLIC WORKS

PROJECT #: CDN 6256.484

SHEET TITLE: BEARING DETAILS

PROJECT NAME: MODIFICATION OF NORTHBANK PEDESTRIAN BRIDGE OVER MCCOYS CREEK OUTFALL

REF. DWG. NO.

SHEET NO. B-23

NOTICE: THE OFFICIAL RECORD OF THIS SHEET IS THE ELECTRONIC FILE DIGITALLY SIGNED AND SEALED UNDER RULE 61G15-23.004, F.A.C.

Docusign Envelope ID: F54DB230-A150-452A-B3F0-14C4A48C193C

| MARK SIZE | MARK DES | LENGTH FT IN | NO BARS | TYP BAR | STY A | STY G | B FT IN FR | C FT IN FR | D FT IN FR | E FT IN FR | F FT IN FR | H FT IN FR | J FT IN FR | K FT IN FR | N NO | Ø ANG |
|---|---|---|---|---|---|---|---|---|---|---|---|---|---|---|---|---|
| LOCATION CAP (PIER 1 COLUMN 1 & PIER 2 COLUMN 2) NO. REQUIRED = 2 | | | | | | | | | | | | | | | | |
| 9 | P01 | 33- 4 | 4 | 11 | | | 13- 4 | 10- 0 | 10- 0 | | | | | | | |
| 5 | P02 | 13- 9 | 4 | 13 | | | 3- 0 | 5- 4 1/4 | 5- 4 1/4 | | | | | | 15 | 15 |
| 5 | P03 | 10- 8 | 2 | 1 | | | 10- 8 | | | | | | | | | |
| 4 | P04 | 8- 1 | 4 | 4 | 4 | 4 | 2- 4 | 1- 4 | | | | | | | | |
| 4 | P05 | VARY | 2 Sets | 4 | 4 | 4 | 2- 4 | 1- 4 | | | | | | | | |
| | | 6- 4 | of 12 | 4 | | | 0-11 | 1- 4 | | | | | | | | |
| 4 | P06 | 4- 0 | 2 | 10 | | | 2- 0 | 2- 0 | | | | | | | | |
| LOCATION CAP (PIER 1 COLUMN 2 & PIER 2 COLUMN 1) NO. REQUIRED = 2 | | | | | | | | | | | | | | | | |
| 9 | P01 | 33- 4 | 4 | 11 | | | 13- 4 | 10- 0 | 10- 0 | | | | | | | |
| 5 | P02 | 13- 9 | 4 | 13 | | | 3- 0 | 5- 4 1/4 | 5- 4 1/4 | | | | | | 15 | 15 |
| 5 | P03 | 10- 8 | 2 | 1 | | | 10- 8 | | | | | | | | | |
| 4 | P04 | 8- 1 | 4 | 4 | 4 | 4 | 2- 4 | 1- 4 | | | | | | | | |
| 4 | P05 | VARY | 2 Sets | 4 | 4 | 4 | 2- 4 | 1- 4 | | | | | | | | |
| | | 6- 8 | of 12 | 4 | 4 | 4 | 0-11 | 1- 4 | | | | | | | | |
| 4 | P06 | 4- 0 | 2 | 10 | | | 2- 0 | 2- 0 | | | | | | | | |
| 4 | P07 | 10- 0 | 25 | 11 | | | 0- 4 | 4-10 | 4-10 | | | | | | | |
| 4 | P08 | 13- 4 | 10 | 1 | | | 13- 4 | | | | | | | | | |
| 4 | P09 | 4- 8 | 6 | 1 | | | 4- 8 | | | | | | | | | |
| 4 | P10 | 1- 4 | 10 | 1 | | | 1- 4 | | | | | | | | | |
| 4 | P11 | 3-11 | 12 | 11 | | | 1- 3 | 1- 4 | 1- 4 | | | | | | | |
| 4 | P12 | 6- 1 | 2 | 4 | 4 | 4 | 1- 4 | 1- 4 | | | | | | | | |
| LOCATION COLUMN (PIERS 1 & 2) NO. REQUIRED = 1 | | | | | | | | | | | | | | | | |
| 8 | C01 | 20- 4 | 12 | 1 | | | 20- 4 | | | | | | | | | |
| 8 | C02 | 25- 4 | 12 | 1 | | | 25- 4 | | | | | | | | | |
| 8 | C03 | 16- 4 | 14 | 1 | | | 16- 4 | | | | | | | | | |
| 8 | C04 | 21- 9 | 14 | 1 | | | 21- 9 | | | | | | | | | |
| 8 | C05 | 7- 6 | 8 | 1 | | | 7- 6 | | | | | | | | | |
| 4 | C06 | 8- 1 | 95 | 4 | 4 | 4 | 2- 4 | 1- 4 | | | | | | | | |
| 4 | C07 | 4- 1 | 12 | 4 | 4 | 4 | 0-10 | 0-10 | | | | | | | | |
| LOCATION FOOTING (PIERS 1 & 2) NO. REQUIRED = 2 | | | | | | | | | | | | | | | | |
| 8 | F01 | 18- 3 | 24 | 11 | | | 13- 3 | 2- 6 | 2- 6 | | | | | | | |
| 8 | F02 | 15- 9 | 34 | 11 | | | 10- 9 | 2- 6 | 2- 6 | | | | | | | |
| 8 | F03 | 8-10 | 26 | 10 | | | 7- 6 | 1- 4 | | | | | | | | |
| 4 | F04 | 13- 7 | 4 | 11 | | | 10- 7 | 1- 6 | 1- 6 | | | | | | | |
| 4 | F05 | 16- 1 | 4 | 11 | | | 13- 1 | 1- 6 | 1- 6 | | | | | | | |

NOTE:
Work this sheet with index 415-001.

NOTICE: THE OFFICIAL RECORD OF THIS SHEET IS THE ELECTRONIC FILE DIGITALLY SIGNED AND SEALED UNDER RULE 61G15-23.004, F.A.C.

REVISIONS

| DATE | BY | DESCRIPTION | DATE | BY | DESCRIPTION |
|---|---|---|---|---|---|
| | | | | | |

Bhushan Godbole, P.E.
P.E. NO.: 54325
STV Incorporated
4345 Southpoint Blvd., Suite 200
Jacksonville, Florida 32216



DRAWN BY: HGD 06-25
CHECKED BY: MBH 06-25
DESIGNED BY: MBH 06-25
CHECKED BY: BAG 06-25

CITY OF JACKSONVILLE, FLORIDA
DEPARTMENT OF PUBLIC WORKS

PROJECT #: CDN 6256.484

SHEET TITLE: REINFORCING BAR LIST (1 OF 2)

PROJECT NAME: MODIFICATION OF NORTHBANK PEDESTRIAN BRIDGE OVER MCCOYS CREEK OUTFALL

REF. DWG. NO.

SHEET NO. B-24

Docusign Envelope ID: F54DB230-A150-452A-B3F0-14C4A48C193C

| MARK SIZE | MARK DES | LENGTH FT IN | NO BARS | TYP BAR | STY A | STY G | B FT IN FR | C FT IN FR | D FT IN FR | E FT IN FR | F FT IN FR | H FT IN FR | J FT IN FR | K FT IN FR | N NO | Ø ANG |
|---|---|---|---|---|---|---|---|---|---|---|---|---|---|---|---|---|
| LOCATION SPANS 1 & 3 SUPERSTRUCTURE | | | | | | | | | | | NO. REQUIRED = 2 | | | | | |
| 4 | S01 | 4- 0 | 30 | 10 | | | 2- 0 | 2- 0 | | | | | | | | |
| 4 | S02 | 29-10 | 8 | 1 | | | 29-10 | | | | | | | | | |
| 4 | S03 | 8- 3 | 8 | 12 | | | 6-10 | 1- 5 | | | | | | | | 5 |
| 4 | S04 | 4- 0 | 2 | 1 | | | 4- 0 | | | | | | | | | |
| 4 | S05 | 2- 6 | 4 | 17 | 1 | | 2- 0 | | | | | | | | | |
| 4 | S06 | 13- 8 | 2 | 1 | | | 13- 8 | | | | | | | | | |
| 4 | S07 | 3- 5 | 78 | 4 | 4 | 4 | 0- 8 | 0- 8 | | | | | | | | |
| LOCATION SPAN 2 SUPERSTRUCTURE | | | | | | | | | | | NO. REQUIRED = 1 | | | | | |
| 4 | S09 | 2- 3 | 140 | 5 | | | 0- 4 | 1- 1 | 0- 3 | 0- 3 | | | | | | |
| 4 | S10 | 29-10 | 60 | 1 | | | 29-10 | | | | | | | | | |
| 4 | S11 | 9-10 | 30 | 28 | | | 1- 5 | 1- 5 | 6-11 3/4 | 0- 7 | | | | | | |
| 4 | S12 | 35-10 | 4 | 1 | | | 35-10 | | | | | | | | | |
| 4 | S13 | 5- 8 | 7 | 25 | | | 0- 7 1/2 | 2- 2 | 0- 7 1/2 | 0- 7 1/2 | 1- 0 | 1- 0 | | | | |
| 5 | S01 | 13- 8 | 92 | 1 | | | 13- 8 | | | | | | | | | |
| 5 | S02 | 8- 8 | 92 | 1 | | | 8- 8 | | | | | | | | | |
| 5 | S03 | 3- 2 | 184 | 1 | | | 3- 2 | | | | | | | | | |
| 5 | S04 | 8-11 | 28 | 11 | | | 0- 5 | 3- 2 | 5- 4 | | | | | | | |
| 5 | S05 | 3- 6 | 78 | 6 | | | 0- 8 | 0- 9 | 0- 8 | 0- 9 | | | | | | |
| 5 | S07 | 13- 8 | 6 | 1 | | | 13- 8 | | | | | | | | | |
| 5 | S08 | 14- 0 | 14 | 42 | | | 0- 4 | 3- 4 | 6- 4 | 3- 4 | | 13- 8 | | | | |

END OF LIST

NOTE:

1. Work this sheet with Standard Plans Index 415-001.

REVISIONS

| DATE | BY | DESCRIPTION | DATE | BY | DESCRIPTION |
|---|---|---|---|---|---|
| | | | | | |

Bhushan Godbole, P.E.
P.E. NO.: 54325
STV Incorporated
4345 Southpoint Blvd., Suite 200
Jacksonville, Florida 32216



DRAWN BY: HGD 06-25
CHECKED BY: MBH 06-25
DESIGNED BY: MBH 06-25
CHECKED BY: BAG 06-25

CITY OF JACKSONVILLE, FLORIDA
DEPARTMENT OF PUBLIC WORKS

PROJECT # CDN 6256.484

SHEET TITLE: REINFORCING BAR LIST (2 OF 2)

PROJECT NAME: MODIFICATION OF NORTHBANK PEDESTRIAN BRIDGE OVER MCCOYS CREEK OUTFALL

REF. DWG. NO.

SHEET NO. B-25

NOTICE: THE OFFICIAL RECORD OF THIS SHEET IS THE ELECTRONIC FILE DIGITALLY SIGNED AND SEALED UNDER RULE 61G15-23.004, F.A.C.

Docusign Envelope ID: F54DB230-A150-452A-B3F0-14C4A48C193C

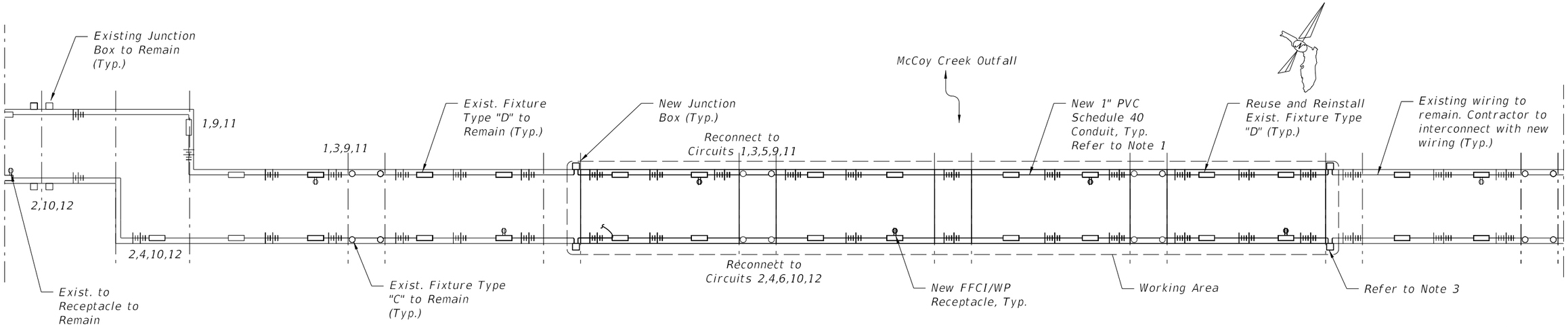


PLAN

EXISTING FIXTURE TYPE "C" TO BE REUSED

N.T.S.

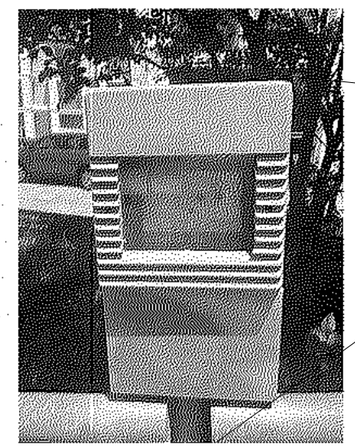

Fixture Type "D"

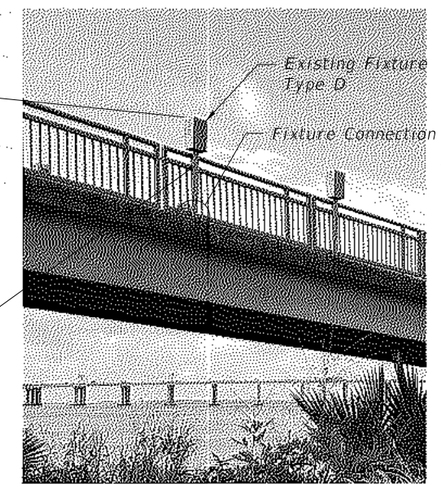


General View

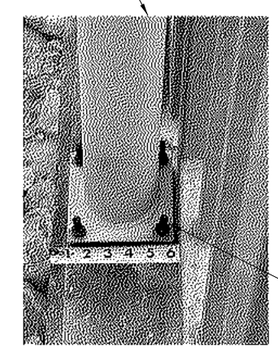


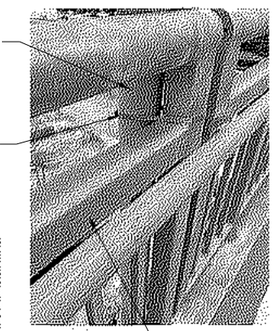


Connection Detail
(Refer to Note 3)

EXISTING FIXTURE TYPE "D" TO BE REUSED

N.T.S.

NOTE:

1. Run two 1-inch Conduits on Each Side of Elevated Walk. Intercept existing Conduit and Reconnect New Conduit and Wires Power Light Fixture. If Spare Circuit was run the Full Length of the Elevated Walkway (R1-11, 12), Rerun Spare Conduit as Original Intended.

2. It is the Intent of this Contract to Reuse All Existing Light Fixture and Reconnect them to the Existing Circuits.

3. Use same post connection as the existing Fixture Type "D" post.

| REVISIONS | | | | | |
|---|---|---|---|---|---|
| DATE | BY | DESCRIPTION | DATE | BY | DESCRIPTION |
| | | | | | |

Jorge Leon, P.E.
P.E. NO.: 68705
STV Incorporated
4345 Southpoint Blvd, Suite 200
Jacksonville, Florida 32216



DRAWN BY: MPS 06-25
CHECKED BY: JL 06-25
DESIGNED BY: MPS 06-25
CHECKED BY: JL 06-25

CITY OF JACKSONVILLE, FLORIDA
DEPARTMENT OF PUBLIC WORKS

PROJECT #: CDN 6256.484

SHEET TITLE: LIGHTING DETAILS

REF. DWG. NO.

PROJECT NAME: MODIFICATION OF NORTHBANK PEDESTRIAN BRIDGE OVER MCCOYS CREEK OUTFALL

SHEET NO. L-1

DangHG 8/22/2025 2:11:38 PM I:\Projects\4020666\4020666_2000\50_Deliverables & Submittals\Northbank ped bridge\lighting\LISPElev01.dgn

NOTICE: THE OFFICIAL RECORD OF THIS SHEET IS THE ELECTRONIC FILE DIGITALLY SIGNED AND SEALED UNDER RULE 61G15-23.004, F.A.C.

Docusign Envelope ID: F54DB230-A150-452A-B3F0-14C4A48C193C

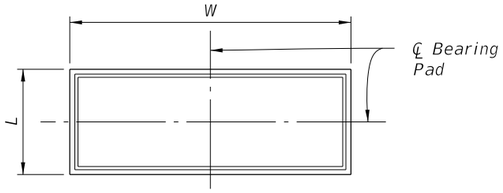


PLAN

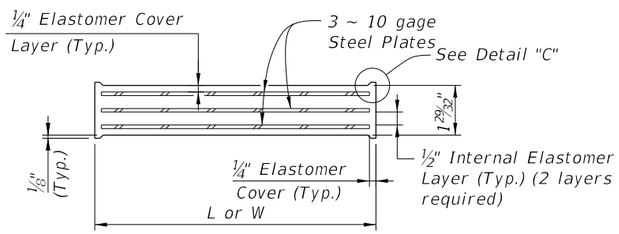


TYPICAL SECTION TYPE D, E & AA PAD

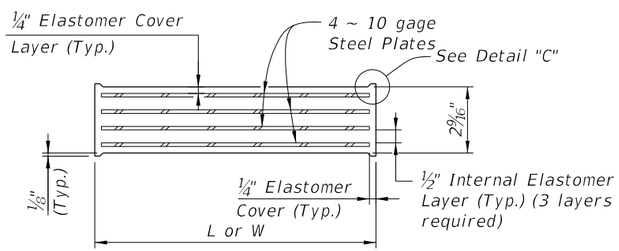


TYPICAL SECTION TYPE F, G & AB PAD

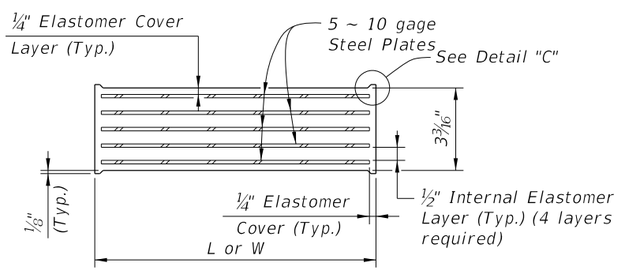


TYPICAL SECTION TYPE H PAD

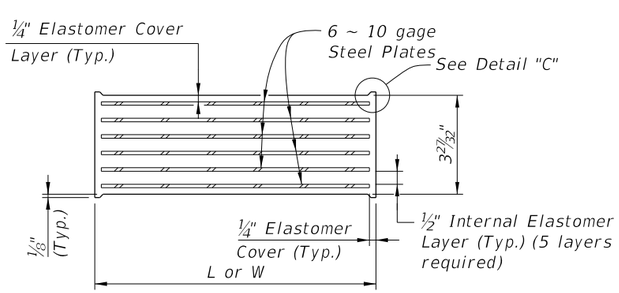


TYPICAL SECTION TYPE J & K PAD

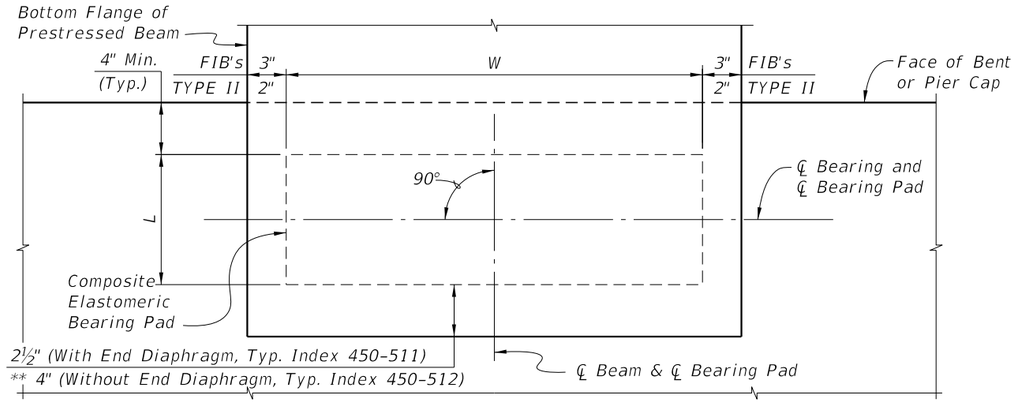


PARTIAL PLAN (Beam & Bearing Skew = 0°)

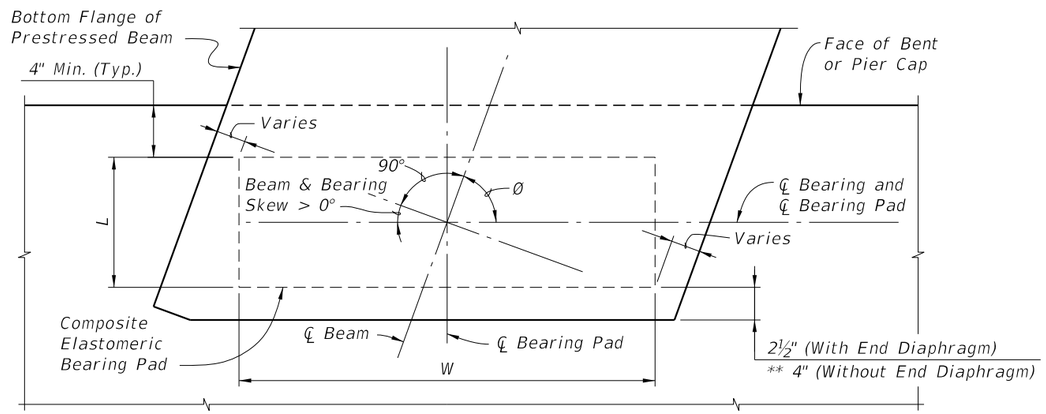


PARTIAL PLAN (Beam & Bearing Skew > 0°) (Use Index 450-511)

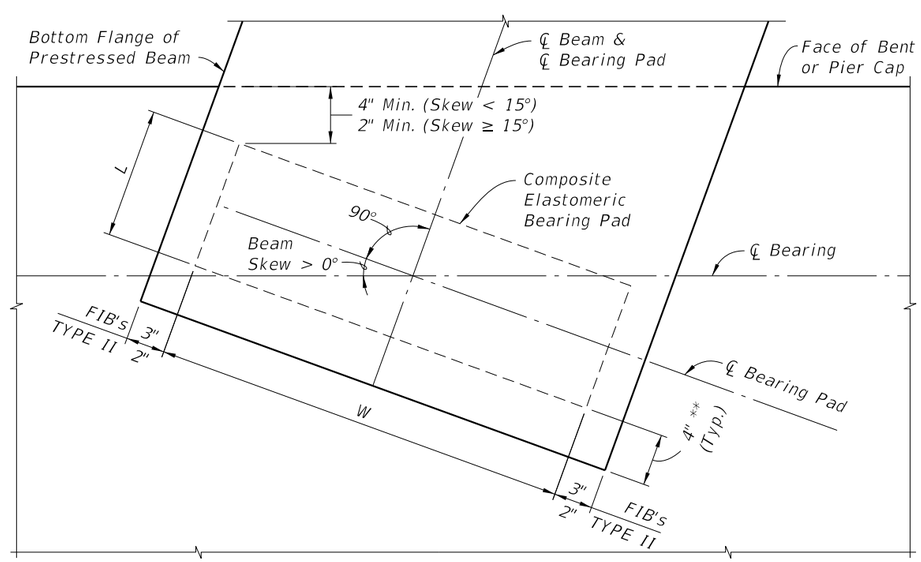


PARTIAL PLAN WITH SQUARED END BEAM (Use Index 450-512)
(Beam Skew > 0°; Bearing Skew = 0°)

| | BEAM TYPE | BEARING PAD DIMENSIONS | | *BEVELED BEARING PLATE DIMENSIONS | |
|---|---|---|---|---|---|
| PAD TYPE (See Note 1) | | L | W | C | D |
| D (G=110psi) | FLORIDA I-BEAM | 8" | 2'-8" | 1'-0" | 3'-0" |
| E (G=110psi) | | 10" | 2'-8" | 1'-0" | 3'-0" |
| F (G=110psi) | | 10" | 2'-8" | 1'-0" | 3'-0" |
| G (G=150psi) | | 10" | 2'-8" | 1'-0" | 3'-0" |
| H (G=150psi) | | 10" | 2'-8" | 1'-0" | 3'-0" |
| J (G=150psi) | | 10" | 2'-8" | 1'-0" | 3'-0" |
| K (G=150psi) | | 1'-0" | 2'-8" | 1'-1½" | 3'-0" |
| AA (G=110psi) | AASHTO TYPE II | 10" | 1'-2" | 1'-0" | 1'-4" |
| AB (G=150psi) | | 10" | 1'-2" | 1'-0" | 1'-4" |

* Work this sheet with the appropriate type Bearing Plate Detail (See Bearing Plate Data Table) and BEARING PAD DATA TABLE in the Structures Plans. See TABLE OF BEAM VARIABLES and BEARING PLATE DATA TABLE in the Structures Plans for locations where beveled bearing plates are required.

** Offset to End of Beam is reduced to 2" for Type K Pad.

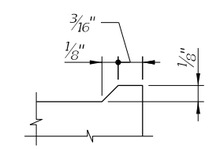


DETAIL "C"

## BEARING PAD NOTES:

1. Neoprene in Type D, E, F & AA bearing pads shall have a shear modulus (G) of 110 psi. Neoprene in Type G, H, J, K & AB bearing pads shall have a shear modulus (G) of 150 psi.
2. Steel Plates in bearing pads shall conform to ASTM A1011 Grade 36, Type 1.
3. See Bearing Pad Data Table in Structures Plans for quantities of Type D, E, F, G, H, J, K, AA and/or AB Bearing Pads.

10/17/2024 8:16:38 AM

| LAST REVISION | REVISION | DESCRIPTION: | | | | |
|---|---|---|---|---|---|---|
| 07/01/15 | | | FY 2025-26 STANDARD PLANS | COMPOSITE ELASTOMERIC BEARING PADS - PRESTRESSED FLORIDA-I & AASHTO TYPE II BEAM | INDEX 400-510 | SHEET 1 of 1 |

Docusign Envelope ID: F54DB230-A150-452A-B3F0-14C4A48C193C

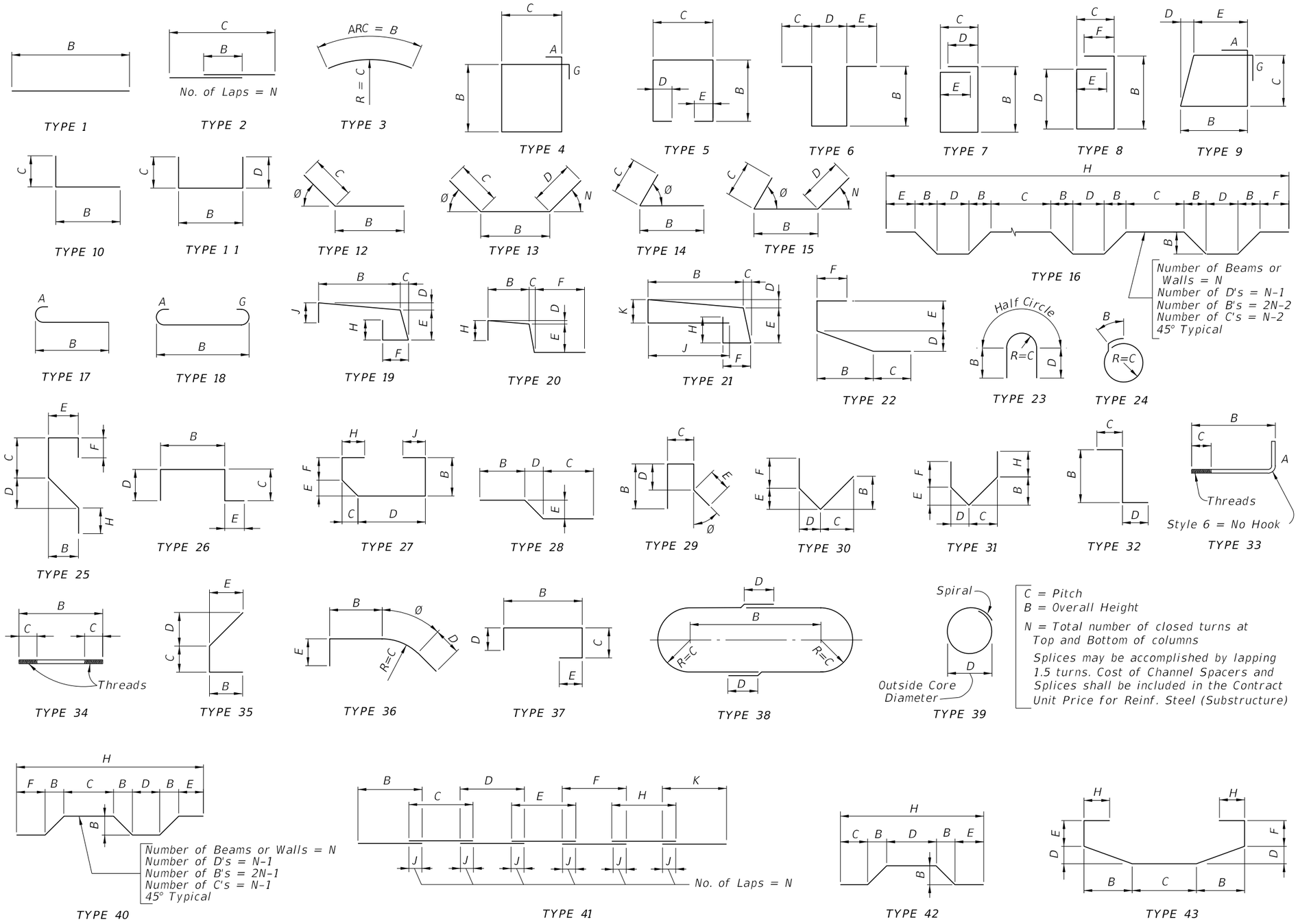


C = Pitch
B = Overall Height
N = Total number of closed turns at Top and Bottom of columns
Splices may be accomplished by lapping 1.5 turns. Cost of Channel Spacers and Splices shall be included in the Contract Unit Price for Reinf. Steel (Substructure)

## HOOK DETAILS

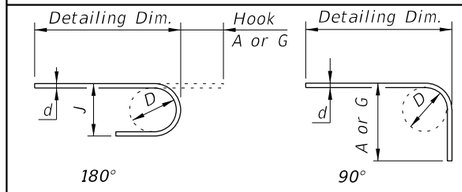


| BAR SIZE | D | 180° HOOKS | | 90° HOOKS |
|---|---|---|---|---|
| | | A OR G | J | A OR G |
| #3 | 2¼" | 5" | 3" | 6" |
| #4 | 3" | 6" | 4" | 8" |
| #5 | 3¾" | 7" | 5" | 10" |
| #6 | 4½" | 8" | 6" | 1'-0" |
| #7 | 5¼" | 10" | 7" | 1'-2" |
| #8 | 6" | 11" | 8" | 1'-4" |
| #9 | 9½" | 1'-3" | 11¾" | 1'-7" |
| #10 | 10¾" | 1'-5" | 1'-1¼" | 1'-10" |
| #11 | 12" | 1'-7" | 1'-2¾" | 2'-0" |
| #14 | 18¼" | 2'-3" | 1'-9¾" | 2'-7" |
| #18 | 24" | 3'-0" | 2'-4½" | 3'-5" |
| STYLE | | 1 | | 3 |

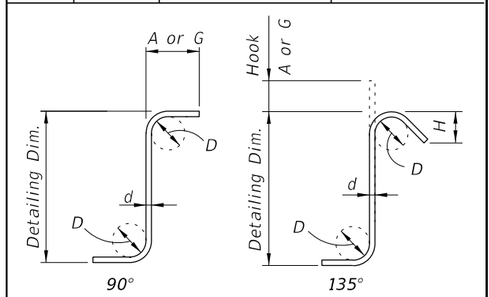


STIRRUPS (TIES SIMILAR)

## STIRRUP & TIE HOOK DIMENSIONS

| BAR SIZE | D | 90° HOOKS | 135° HOOKS | |
|---|---|---|---|---|
| | | A or G | A or G | H * |
| #3 | 1½" | 4" | 4" | 2½" |
| #4 | 2" | 4½" | 4½" | 3" |
| #5 | 2½" | 6" | 5½" | 3¾" |
| #6 | 4½" | 1'-0" | 8" | 4½" |
| #7 | 5¼" | 1'-2" | 9" | 5¼" |
| #8 | 6" | 1'-4" | 10½" | 6" |
| STYLE | | 4 | 5 | |

STYLE 6 = NO HOOK

* Dimension is approximate.

Hook Styles Detailed on this sheet are for Illustration Only.

Actual Hook Style for any particular bar will be shown under A or G Heading on REINFORCING BAR LIST sheet(s) in Structures Plans.

All Dimensions are out-to-out.

NOTE: For Bar Dimensions See REINFORCING BAR LIST Sheet(s) in Structures Plans.

Docusign Envelope ID: F54DB230-A150-452A-B3F0-14C4A48C193C

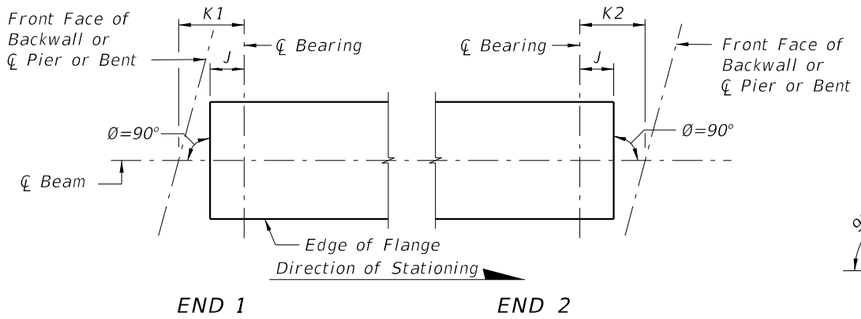


CASE 1
(Standard Orientation for New Construction)

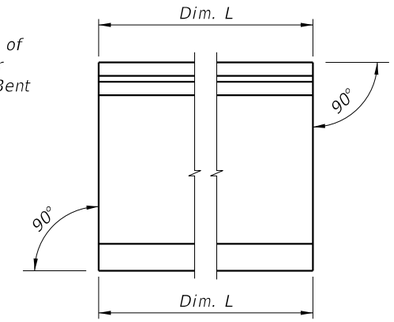


CONDITION 1
(Dim P = 0.0)

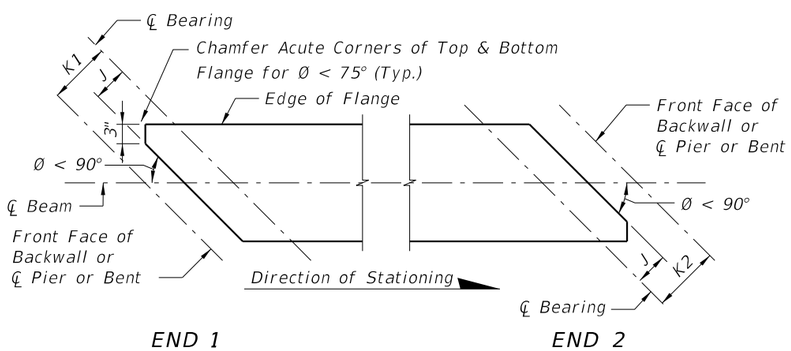


CASE 2
(Special Orientation for Widenings)

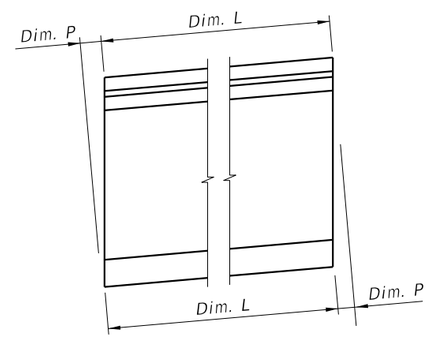


CONDITION 2

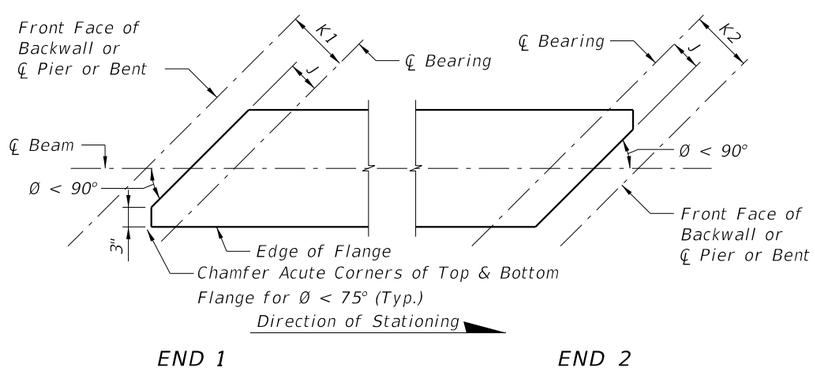


CASE 3
(Special Orientation for Widenings)

SCHEMATIC PLAN VIEWS AT BEAM ENDS

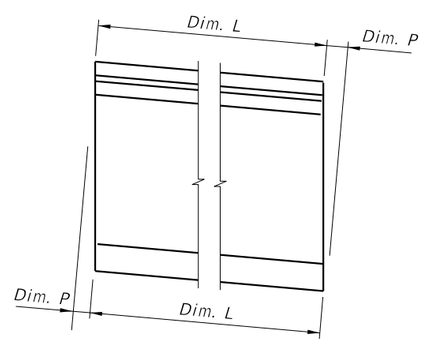


CONDITION 3

SCHEMATIC END ELEVATIONS OF BEAMS
(Showing Vertical Bevel of Beam End)

## BEAM NOTES

1. Work this Index with the Table of Beam Variables in Structures Plans.
2. All bar bend dimensions are out to out.
3. Concrete cover: 2 inches minimum.
4. Strands N: ⅜" Ø minimum, stressed to 10,000 lbs. each.
5. Place one (1) Bar 4K or 5Z at each location. Alternate the direction of the ends for each bar.
6. Tie Bars 4K and 5Z to the fully bonded strands in the bottom or center row (see "STRAND PATTERN" on the Table of Beam Variables sheet in Structures Plans).
7. Place Bars 3D1 in beam END 1, and Bars 3D2 in beam END 2.
8. For Beams with vertically beveled end conditions:
   - A. Place first row of Bars 3D1, 3D2, 4K, 4Y and 5Z parallel to the end of the beam. Progressively rotate remaining bars within the limits of Bars 5Z until vertical by adjusting the spacing at the top of beam up to a maximum of 1".
   - B. For deformed WWR, cut top cross wire and rotate bars as required or reduce end cover at top of the beam to minimum 1".
9. For beams with skewed end conditions:
   - A. WWR is not permitted for end reinforcement Bars 3D1, and 3D2 on skewed ends; use bar reinforcement.
   - B. Place end reinforcement parallel to the skewed end of the beam. End reinforcement is defined as Bars 3D1, 3D2, 4K, 4Y and 5Z placed within the limits of the spacing for Bars 3D in "ELEVATION AT END OF BEAM".
   - C. Beyond the limits of the spacing for Bars 3D, place Bars 4K perpendicular to the longitudinal axis of the beam. For placement see "SKEWED BEAM END DETAILS FOR WIDENING EXISTING BRIDGES" (Sheet 2).
10. Contractor Options:
    - A. Deformed WWR may be used in lieu of Bars 3D, 4K, and 5Z as shown on Sheet 4; except at skewed ends (See Note 9).
    - B. Bars 3D1 and 3D2 may be fabricated as a two-piece bar with a 1'-0" minimum lap splice of the bottom legs.
    - C. For deformed WWR, supplemental transverse #4 bars are permitted to support Pieces K & S under the cross wires on the bottom row of strands or above Strands N.
11. Embedment of Safety Line Anchorage Devices are permitted in the top flange to accommodate fall protection systems. See shop drawings for details and spacing of required anchorage devices.
12. For beams with ends that will not to be encased in concrete diaphragms, cut wedges and recess Prestressing Strands at the end of the beam without damaging the surrounding concrete. See "STRAND CUTTING AND PROTECTING DETAIL" on Sheet 2.
13. Holes in the beam web for temporary bracing or shipping devices must be formed prior to casting. Fill holes not meeting all the following criteria in accordance with Specification Section 450.
    - A. The superstructure environmental classification is slightly or moderately aggressive
    - B. Clear cover to adjacent steel reinforcing is 1"or greater
    - C. Hole inside diameter is 2" maximum
    - D. Non-metallic, non-water absorbing forming materials such as PVC, may be left in place permanently.

10/17/2024 8:46:30 AM

DETAILS AND NOTES

| LAST REVISION | REVISION | DESCRIPTION: | FY 2025-26 STANDARD PLANS | AASHTO TYPE II BEAM | INDEX | SHEET |
|---|---|---|---|---|---|---|
| 11/01/18 | | | | | 450-120 | 1 of 4 |

Docusign Envelope ID: F54DB230-A150-452A-B3F0-14C4A48C193C

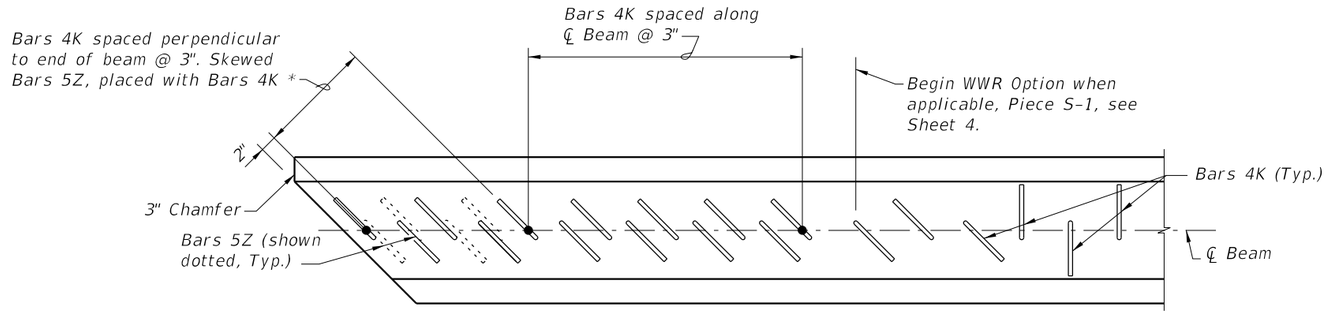


PARTIAL PLAN VIEW (SHOWING TOP FLANGE)
(End 1 Shown, End 2 Similar)
(Bars 5A, 4Y & Strands N not shown for clarity)

* For number of Bars, spacing and placement details see Sheet 3. See Sheet 3 for Conventional Reinforcement, Sheet 4 for WWR.

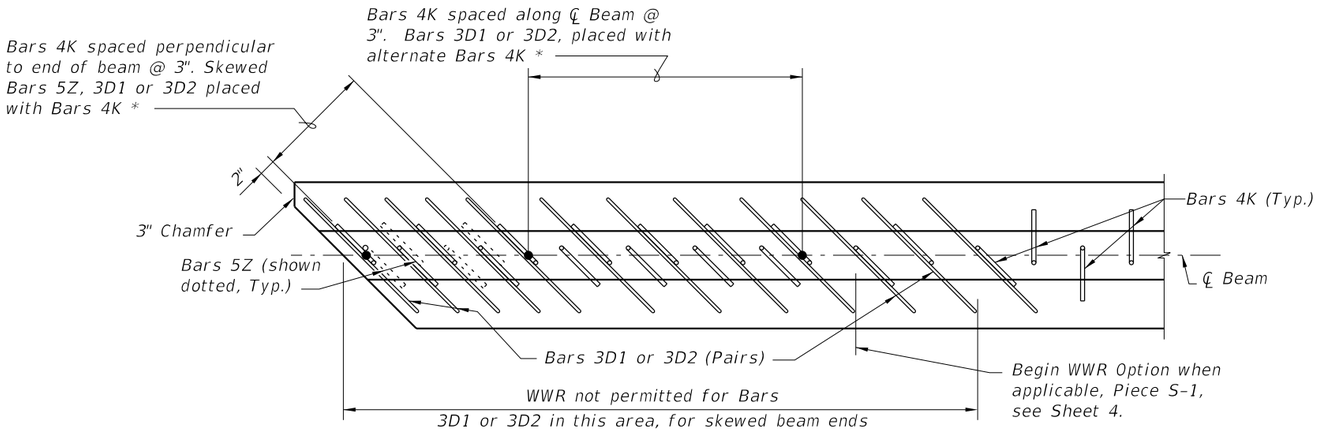


PARTIAL SECTION THRU WEB (SHOWING BOTTOM FLANGE)
(End 1 Shown, End 2 Similar)
(Bars 4Y & Strands not shown for clarity)

## SKEWED BEAM END DETAILS FOR WIDENING EXISTING BRIDGES

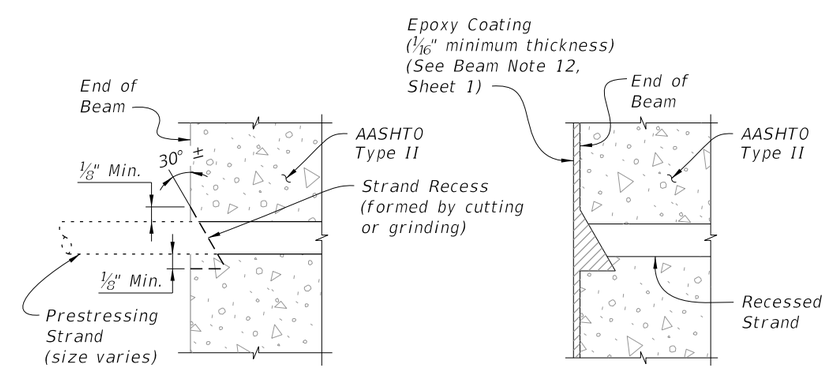


TYPICAL SECTION
SHOWING CUT STRAND RECESS LIMITS

TYPICAL SECTION
AFTER PROTECTING

## STRAND CUTTING AND PROTECTING DETAIL

DETAILS AND NOTES

10/17/2024 8:46:38 AM

| LAST REVISION | REVISION | DESCRIPTION: | FDOT | FY 2025-26 STANDARD PLANS | AASHTO TYPE II BEAM | INDEX | SHEET |
|---|---|---|---|---|---|---|---|
| 11/01/19 | | | | | | 450-120 | 2 of 4 |

Docusign Envelope ID: F54DB230-A150-452A-B3F0-14C4A48C193C

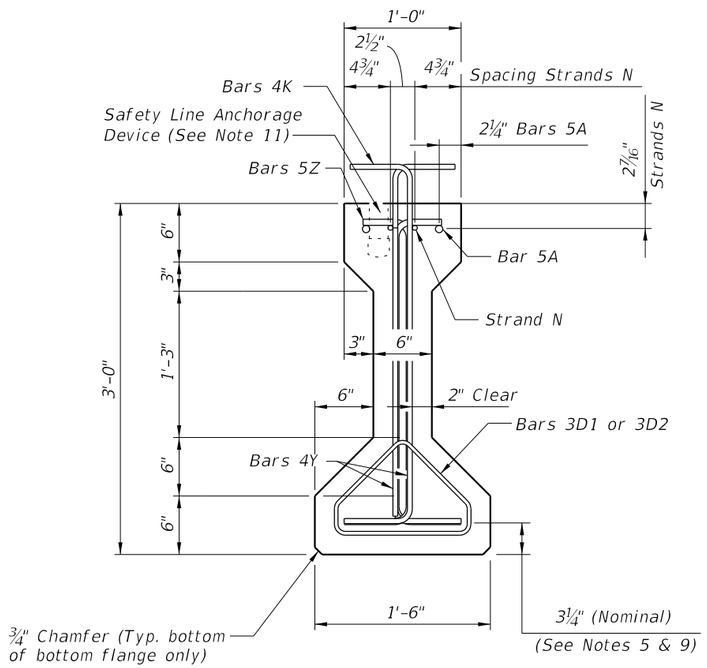


END VIEW

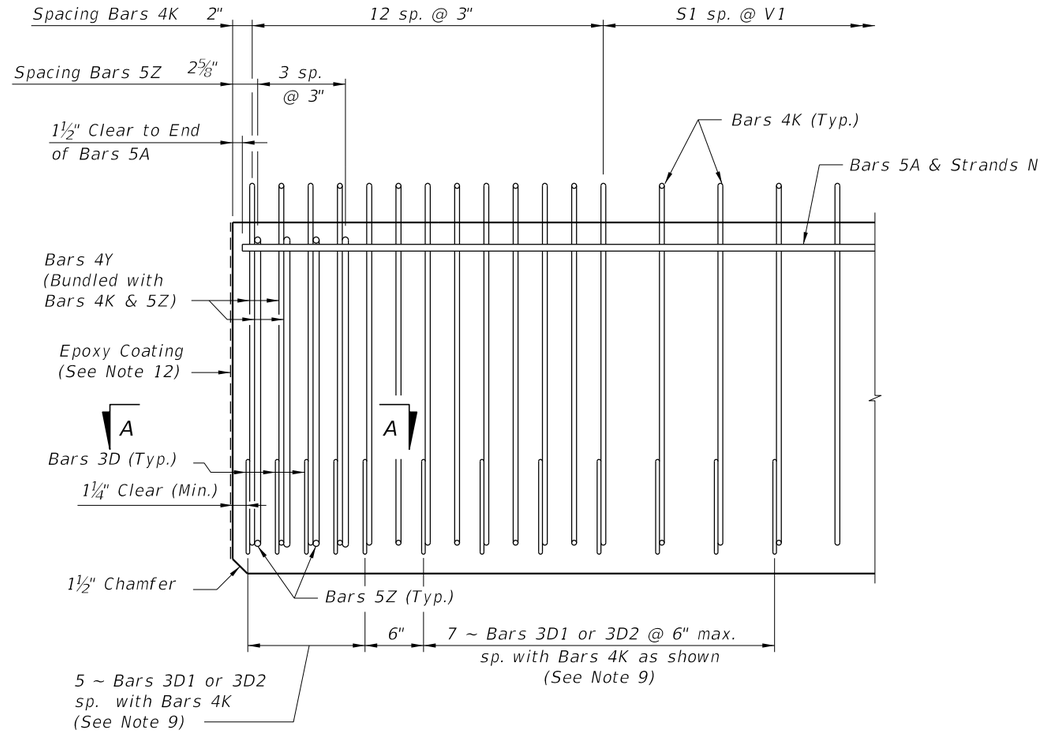


ELEVATION AT END OF BEAM
(Flanges Not Shown For Clarity)

## BILL OF REINFORCING STEEL FOR ONE BEAM ONLY

| MARK | NOTE NUMBERS | SIZE | NUMBER REQUIRED | LENGTH (NOTE 1) |
|---|---|---|---|---|
| A | — | 5 | 4 | 12'-0" |
| D1 | 8, 9 & 10 | 3 | 12 | See Table |
| D2 | 8, 9 & 10 | 3 | 12 | See Table |
| K | 5, 6, 8, 9 & 10 | 4 | See Table | 4'-4" |
| N | 4 & 12 | ⅜" Ø Strand | 2 | DIM L+5" |
| Y | 8 & 9 | 4 | 8 | 2'-6" |
| Z | 5, 6, 8, 9 & 10 | 5 | 8 | 3'-7" |
| | | | | |
| | | | | |

## BENDING DIAGRAMS (See Note 1)

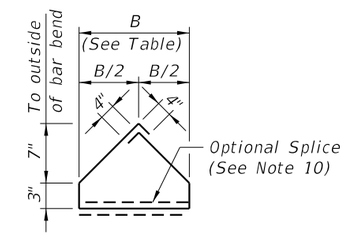


BARS 3D1 & 3D2

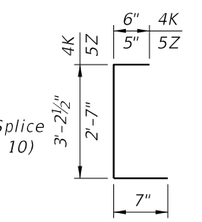


BARS 4K & 5Z

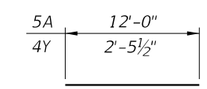


BARS 5A & 4Y

NOTES:

Work this Index with the AASHTO Type II Beam – Table of Beam Variables in Structures Plans.

For referenced notes, see Sheet 1.

For Dimensions L, R, V1 thru V4 and number of spaces S1 thru S4, see AASHTO Type II Beam – Table of Beam Variables.

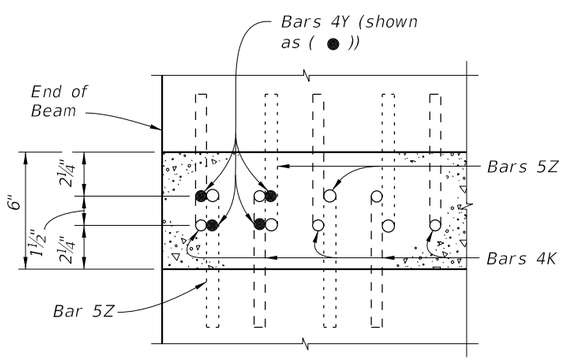


SECTION A-A
(Showing Bars 4K, 4Y & 5Z Only)

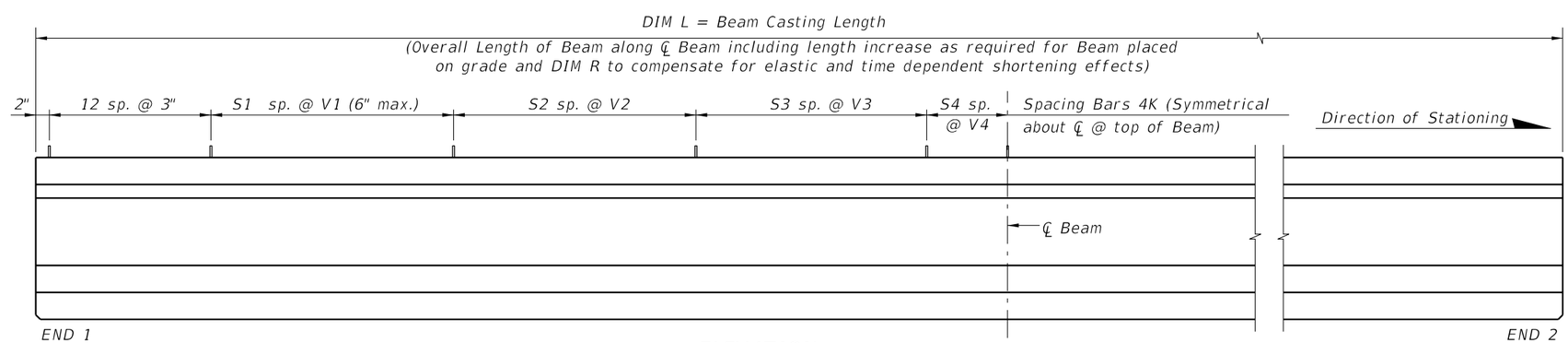


ELEVATION

STANDARD DETAILS

| LAST REVISION | REVISION | DESCRIPTION: | | | | INDEX | SHEET |
|---|---|---|---|---|---|---|---|
| 11/01/19 | | | FY 2025-26 STANDARD PLANS | | AASHTO TYPE II BEAM | 450-120 | 3 of 4 |



10/17/2024 8:46:46 AM

Docusign Envelope ID: F54DB230-A150-452A-B3F0-14C4A48C193C



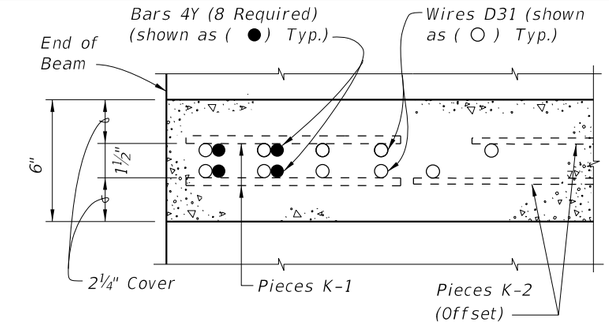


SECTION A-A
FOR WELDED WIRE REINFORCEMENT

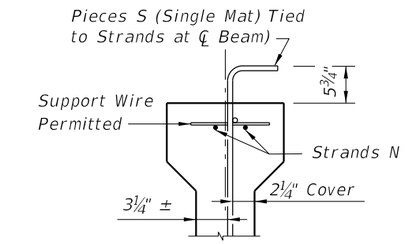


PARTIAL SECTION AT CENTER BEAM

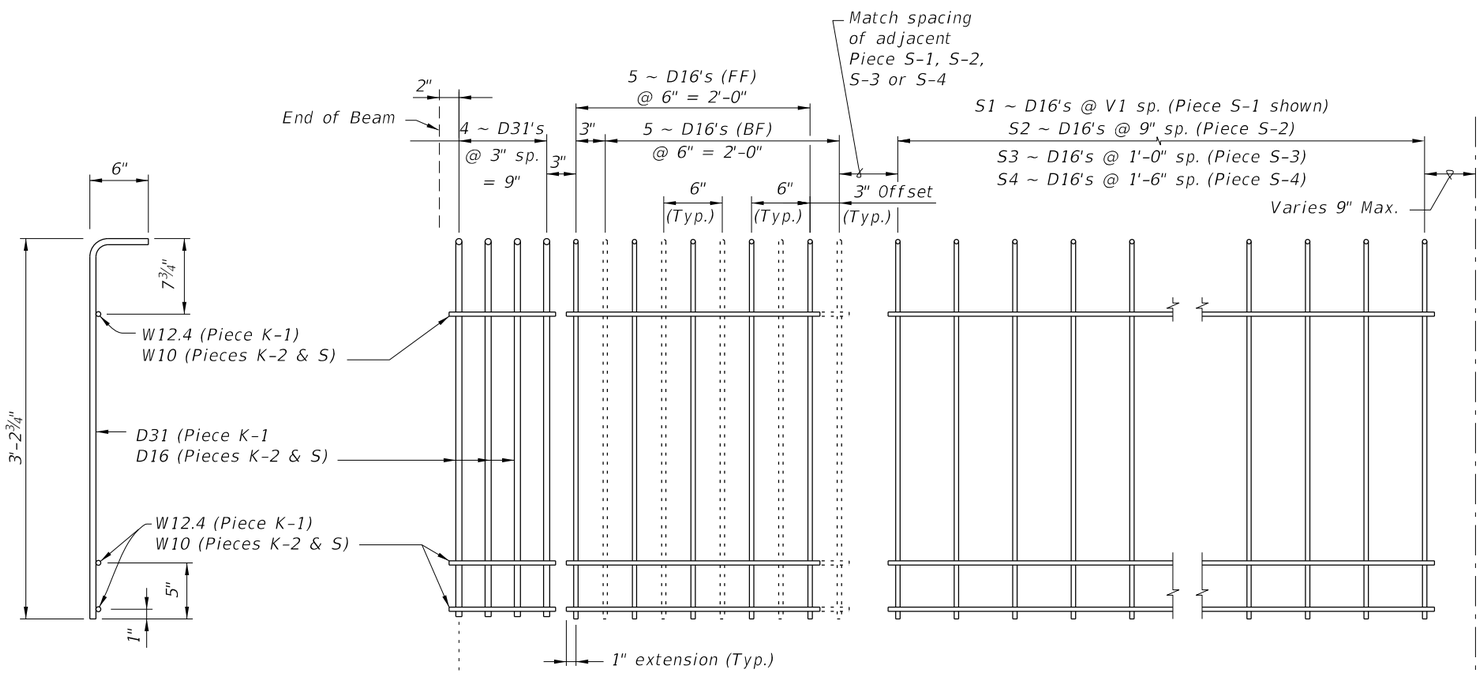


PIECES K & S
END VIEW

PIECE K-1
(Aligned EF)
(4 Required ~
2 Pairs)

PIECE K-2
(FF Shown Solid,
BF Shown Dashed)
(4 Required)

PIECE S-1, S-2, S-3 or S-4
(2 Required Each Piece)

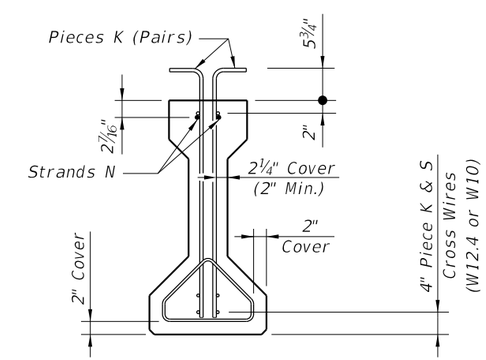


PARTIAL BEAM END VIEW
(Conventional Reinforcing Bars A, Y and
Bottom Strands not Shown for Clarity)

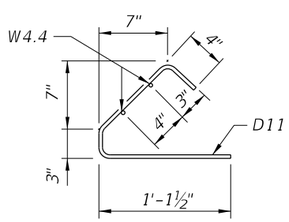


PIECES D
END VIEW

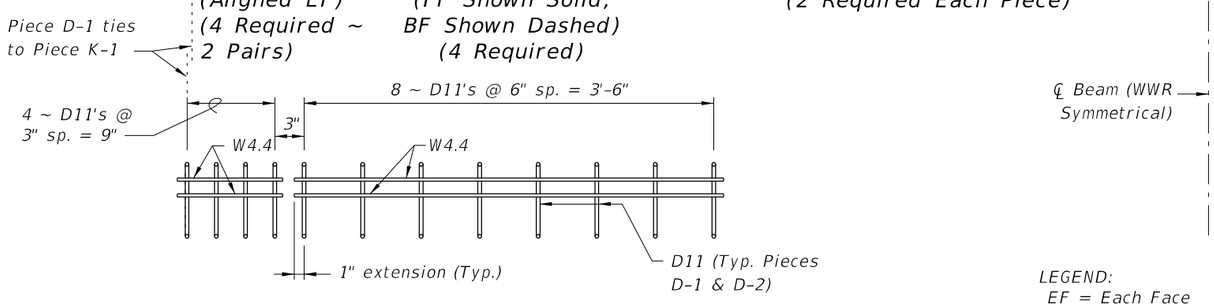


PIECE D-1
(4 Required ~ 2 Pairs)

PIECE D-2
(4 Required ~ 2 Pairs)

LEGEND:
EF = Each Face
FF = Front Face
BF = Back Face

NOTES:

a. See Sheet 3 for placement details & Table of Beam Variables in Structures Plans for variables S1, S2, S3, S4 & V1.
b. Place Conventional Reinforcement Bars 5A as shown on Sheet 3. Place additional Bars 4Y as shown in Section A-A for WWR. Bars 5Z will not be used with the WWR Option.
c. Pieces may be fabricated in multiple length sections.
d. For beams with skewed end conditions, Pieces D-1 & D-2 shall not be used; Conventional Reinforcement Bars D1 & D2 shall be used. See Sheet 2 Skew Details and Sheet 1 Note 9 for placement details. Shift Pieces K & Bars 4Y to accommodate skewed end conditions and align with Bars D.

Docusign Envelope ID: F54DB230-A150-452A-B3F0-14C4A48C193C

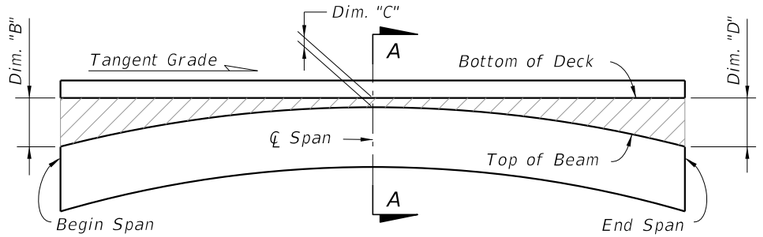


BUILD-UP DIAGRAM FOR TANGENT SPANS
(ALONG ℄ BEAM) (CASE 1)

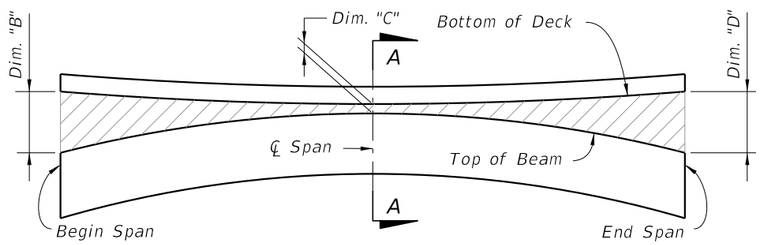


BUILD-UP DIAGRAM FOR SAG VERTICAL CURVE & HORIZONTAL CURVE SPANS
(ALONG ℄ BEAM) (CASE 2)

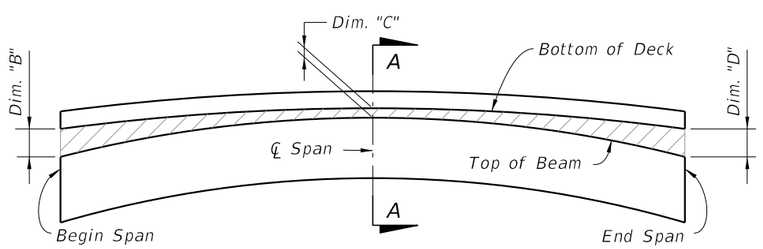


BUILD-UP DIAGRAM FOR CREST VERTICAL CURVE SPANS
- CONTROL AT ℄ SPAN
(ALONG ℄ BEAM) (CASE 3)

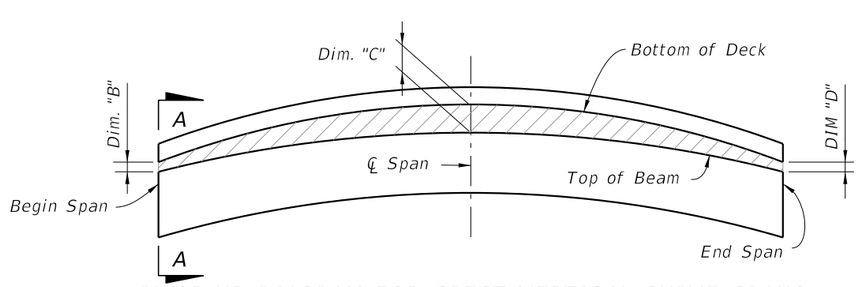


BUILD-UP DIAGRAM FOR CREST VERTICAL CURVE SPANS
- CONTROL AT BEGIN OR END SPAN
(ALONG ℄ BEAM) (CASE 4)

## BEAM CAMBER AND BUILD-UP NOTES:

The build-up values given in the Data Table* are based on theoretical beam cambers. The Contractor shall monitor beam cambers for the purpose of predicting camber values at the time of the deck pour. If the predicted cambers based on field measurements differ more than +/- 1" from the theoretical "Net Beam Camber @ 120 Days" shown in the Data Table*, obtain approval from the Engineer to modify the build-up dimensions as required. When the measured beam cambers create a conflict with the bottom mat of deck steel, notify the Engineer a minimum of 21 days prior to casting.

Dim. "A" includes the weight of the Stay-In-Place Formwork.

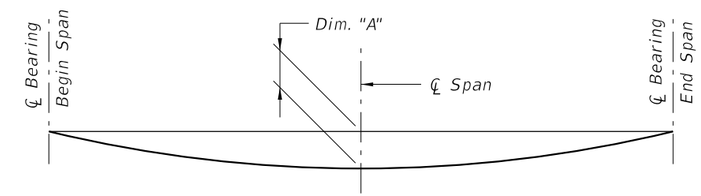


DEAD LOAD DEFLECTION DIAGRAM

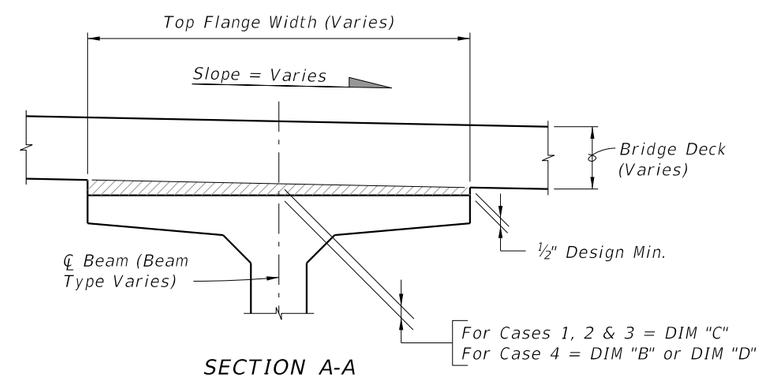


SECTION A-A
BUILD-UP OVER BEAMS
(Florida-I Beam Shown
AASHTO Type II Similar)

* NOTE:
Work this Index with the Build-up and Deflection Data Table for Florida-I and AASHTO Type II Beams in Structures Plans.

| LAST REVISION | REVISION | DESCRIPTION: | | | | INDEX | SHEET |
|---|---|---|---|---|---|---|---|
| 11/01/21 | | | FY 2025-26 STANDARD PLANS | | PRESTRESSED I-BEAMS BUILD-UP & DEFLECTION DATA | 450-199 | 1 of 1 |



10/17/2024 8:47:27 AM

Docusign Envelope ID: F54DB230-A150-452A-B3F0-14C4A48C193C

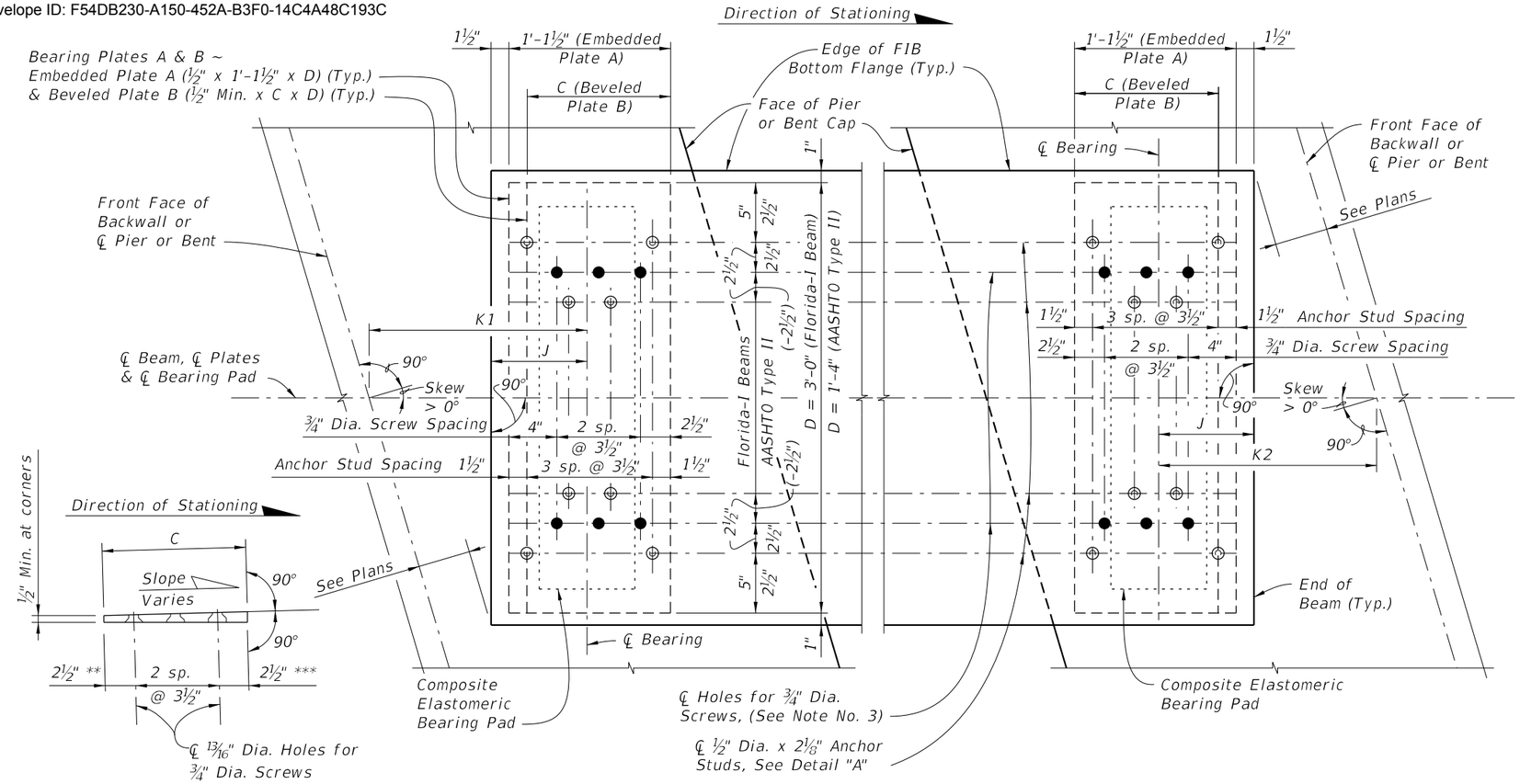


BEVELED BEARING PLATE B
(Along ℄ Beam)
(Positive Slope shown;
Negative Slope similar)

PLAN
(FIB Skewed Alignment Shown, Skew = 0° and AASHTO Type II Similar)

NOTES:

1. Work this sheet with Index 400-510 - Composite Elastomeric Bearing Pads, and 'BEARING PLATE DATA TABLE' in the Structures Plans.
2. Embedded Bearing Plates A are required for all Florida-I beams. Beveled Bearing Plates B with Embedded Bearing Plates A are required for beams as scheduled in the 'BEARING PLATE DATA TABLE' in the Structures Plans.
3. Bearing plate material shall conform to ASTM A36 or ASTM A709 (Grade 36 or 50). Headed Concrete Anchor Studs shall conform to Specification Section 502. Hot-dip galvanize Bearing Plates A & B after fabrication except that Galvanized Caps may be welded in place after hot-dip galvanizing. Drill Bearing Plates A and B as an assembled unit, thread Bearing Plate A only. Holes are not required in Plate A when Plate B is not required. Drill and thread holes perpendicular to Embedded Plate A and prior to plates being galvanized (ASTM A 123).
4. Provide Electroplated, Flat Head Cap Screws in accordance with ASTM F 835. Electroplating shall be ASTM B633, SC 2, Type 1. Provide screws long enough to maintain a ¾" minimum embedment into Embedded Bearing Plate A and Galvanized Cap. Provide steel Galvanized Caps with ½" Min. to 1½" Max. height and nominal 1" inside diameter.
5. Include the cost of Bearing Plates in the pay item for Prestressed Beams.
6. For Pad Type and Dimension C, see the 'BEARING PLATE DATA TABLE' in the Structures Plans. For Dimensions J, K1 and K2, see 'TABLE OF BEAM VARIABLES' in the Structures Plans.
7. All details and dimensions shown are along ℄ Beam. Positive Slope shown, Negative Slope similar.
8. Slope is determined along ℄ Beam at ℄ Bearing. See 'BEARING PLATE DATA TABLE' in the Structures Plans for Slope.

CROSS REFERENCE:
See Sheet 2 for Detail "A"

LEGEND:

* ½" for Pad Type K
** 4" for Pad Type K at End 1
*** 4" for Pad Type K at End 2

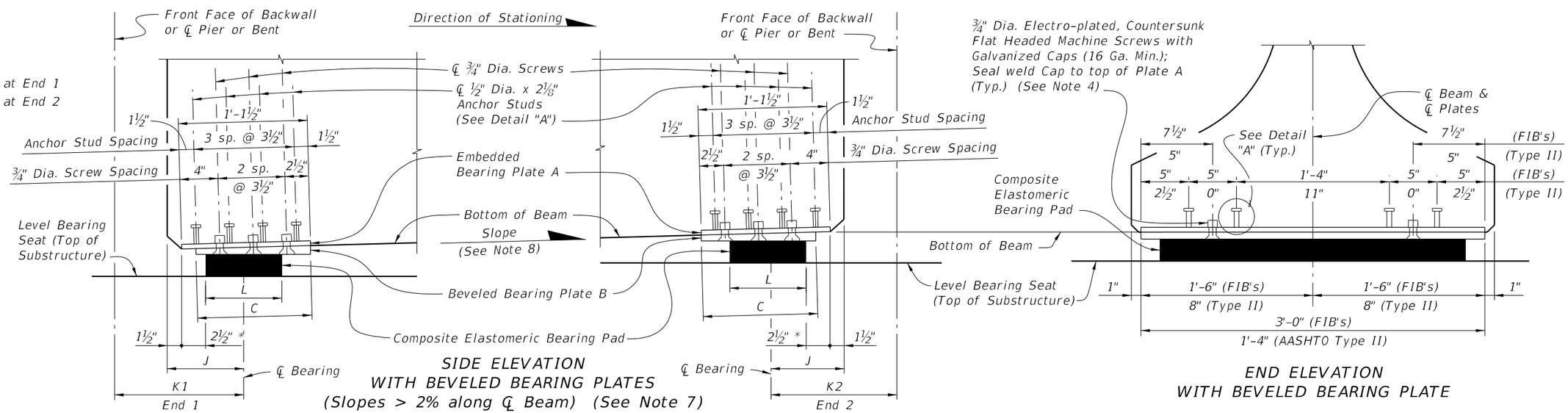


SIDE ELEVATION
WITH BEVELED BEARING PLATES
(Slopes > 2% along ℄ Beam) (See Note 7)

END ELEVATION
WITH BEVELED BEARING PLATE

10/17/2024 9:56:42 AM

| LAST REVISION | REVISION | DESCRIPTION: | | | | INDEX | SHEET |
|---|---|---|---|---|---|---|---|
| 07/01/14 | | | FY 2025-26 STANDARD PLANS | BEARING PLATES (TYPE 2) - PRESTRESSED FLORIDA-I AND AASHTO TYPE II BEAMS | | 450-512 | 1 of 2 |

Docusign Envelope ID: F54DB230-A150-452A-B3F0-14C4A48C193C

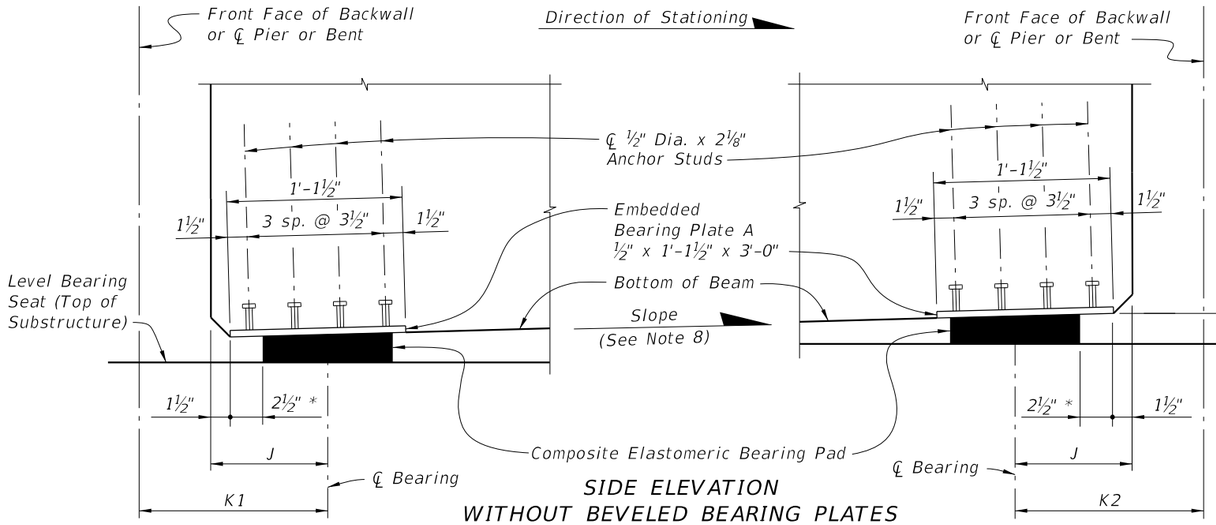


SIDE ELEVATION
WITHOUT BEVELED BEARING PLATES
(Slopes ≤ 0.5% along ℄ Beam) (See Note 7)

* ½" for Pad Type K

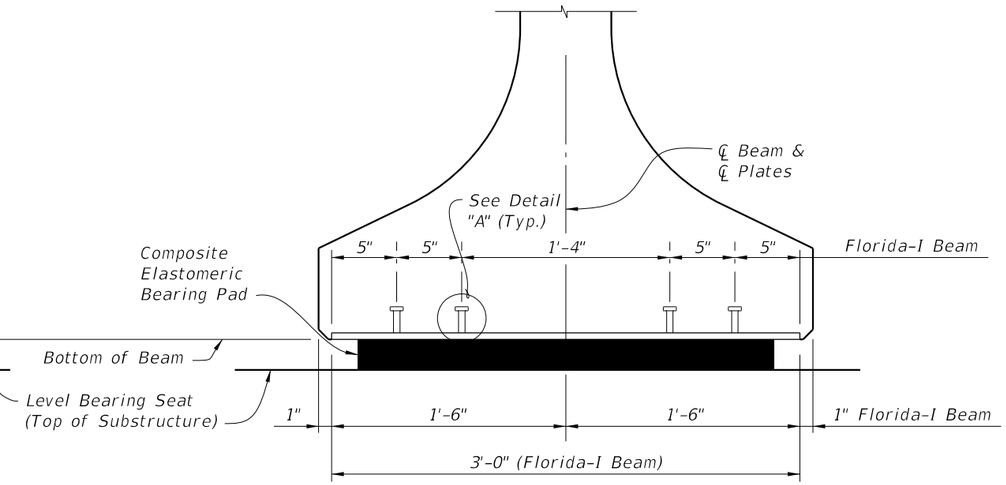


END ELEVATION
WITHOUT BEVELED BEARING PLATE

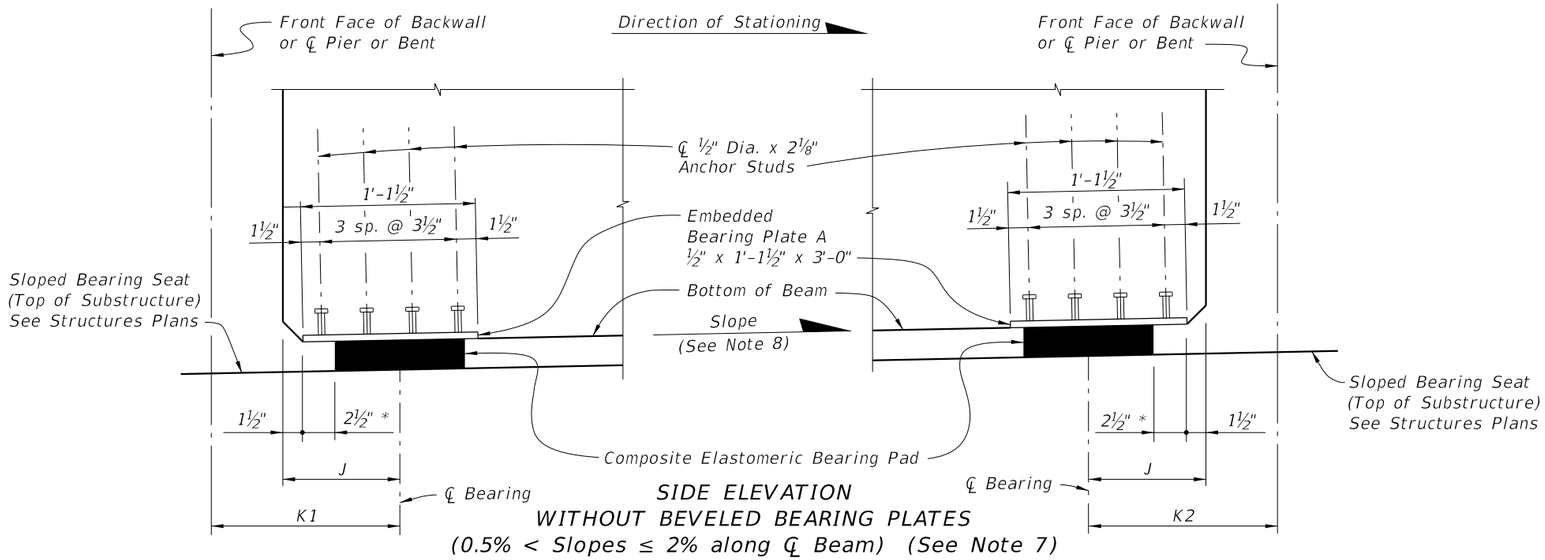


SIDE ELEVATION
WITHOUT BEVELED BEARING PLATES
(0.5% < Slopes ≤ 2% along ℄ Beam) (See Note 7)

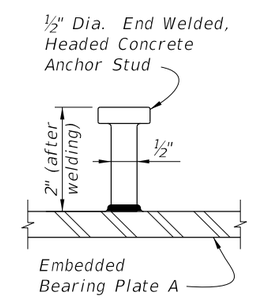


DETAIL "A"

CROSS REFERENCE:
See Sheet 1 for Notes.

10/17/2024 9:56:49 AM

| LAST REVISION | REVISION | DESCRIPTION: | | | | INDEX | SHEET |
|---|---|---|---|---|---|---|---|
| 07/01/14 | | | FY 2025-26 STANDARD PLANS | BEARING PLATES (TYPE 2) - PRESTRESSED FLORIDA-I AND AASHTO TYPE II BEAMS | | 450-512 | 2 of 2 |

Docusign Envelope ID: F54DB230-A150-452A-B3F0-14C4A48C193C

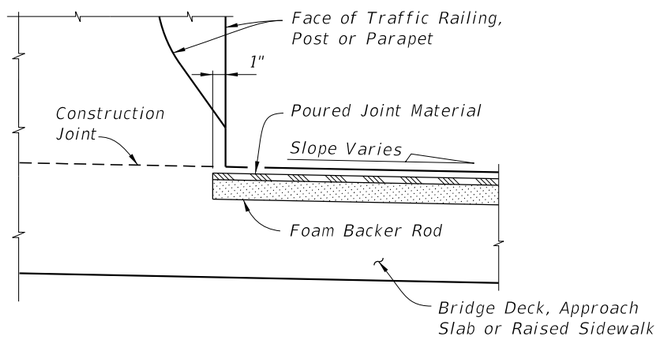


PARTIAL SECTION ALONG ℄ JOINT
JOINT TREATMENT AT HIGH SIDE OF DECK WITH SLOPES 1% OR GREATER

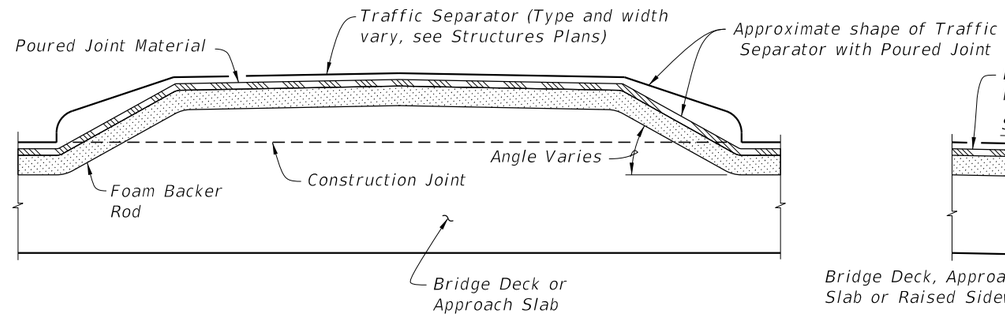


PARTIAL SECTION ALONG ℄ JOINT,
JOINT TREATMENT AT TRAFFIC SEPARATOR

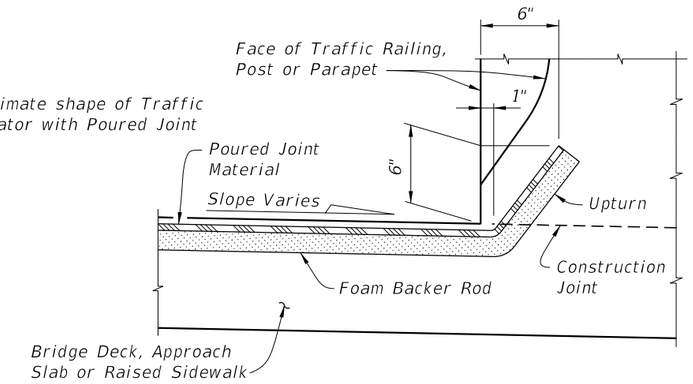


PARTIAL SECTION ALONG ℄ JOINT
JOINT TREATMENT AT LOW SIDE OF DECK OR HIGH SIDE OF DECK WITH SLOPES < 1%

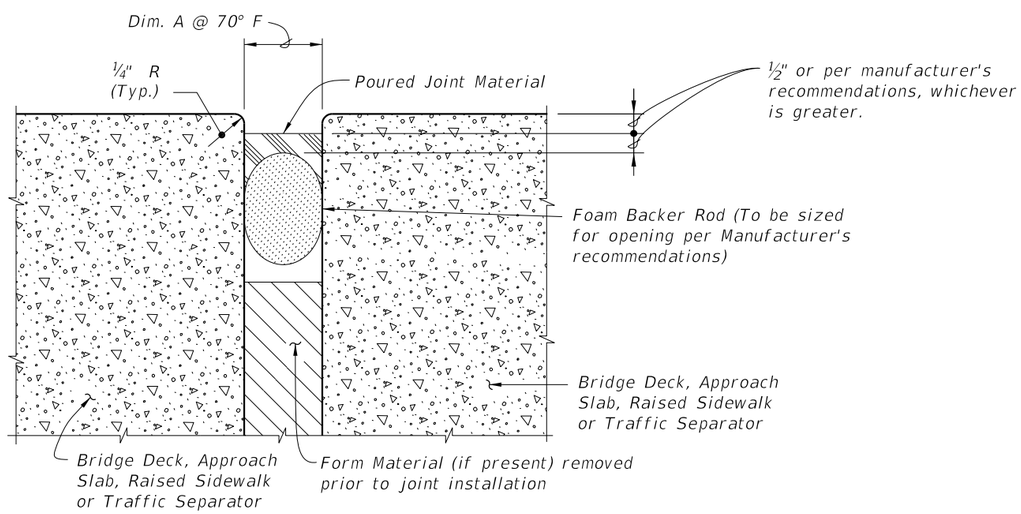


TYPICAL SECTION THRU JOINT

GENERAL NOTES:

1. Furnish and install Poured Joint With Backer Rod Expansion Joint Systems in accordance with Specification Sections 458 and 932 using Type D silicone sealant material.
2. Refer to the Structures Plans, Poured Expansion Joint Data Table for Dim. A @ 70° F.

10/17/2024 10:11:00 AM

| LAST REVISION | REVISION | DESCRIPTION: | | | | INDEX | SHEET |
|---|---|---|---|---|---|---|---|
| 11/01/23 | | | FY 2025-26 STANDARD PLANS | EXPANSION JOINT SYSTEM - POURED JOINT WITH BACKER ROD | | 458-110 | 1 of 2 |

Docusign Envelope ID: F54DB230-A150-452A-B3F0-14C4A48C193C

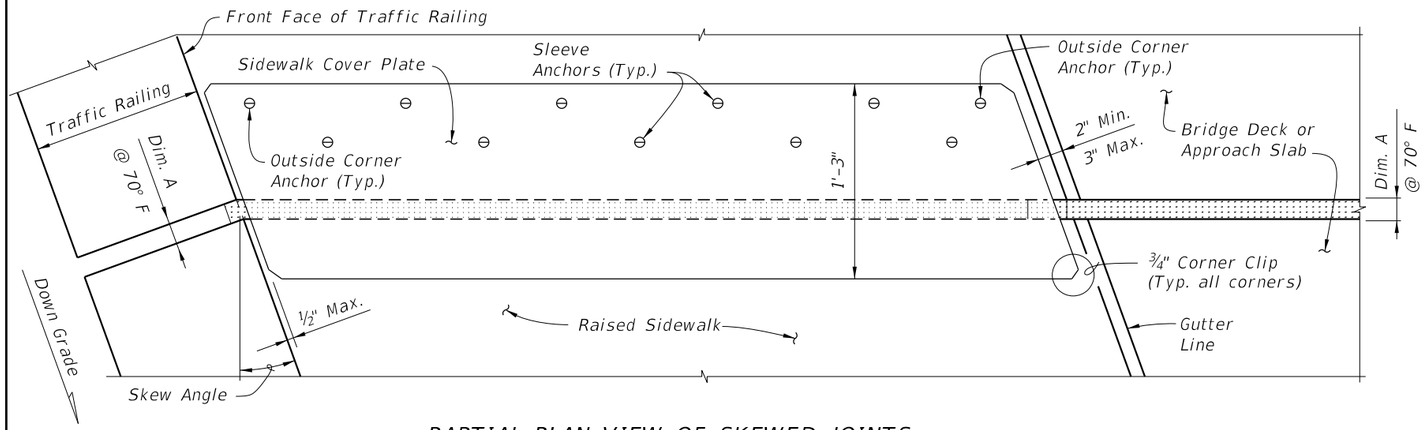


PARTIAL PLAN VIEW OF SKEWED JOINTS

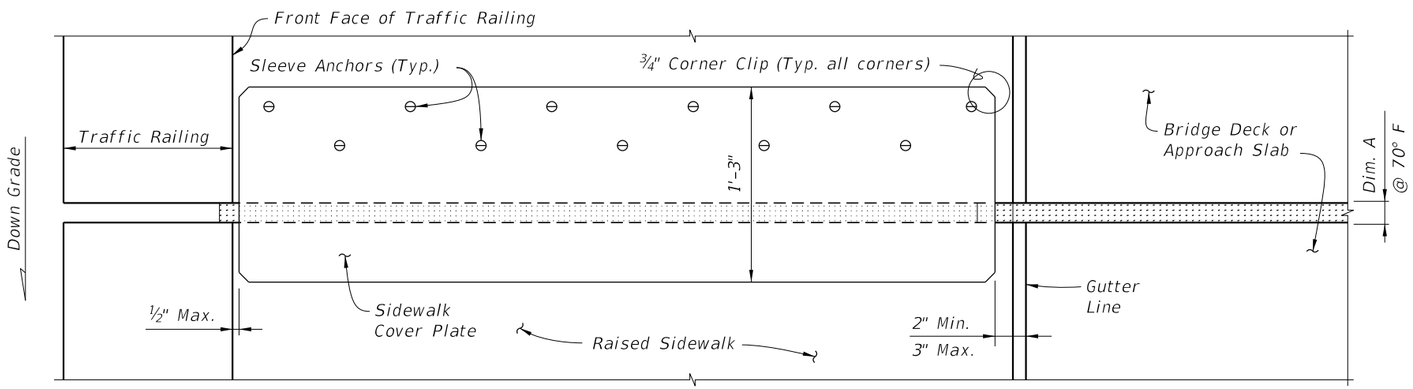


PARTIAL PLAN VIEW OF NON-SKEWED JOINTS

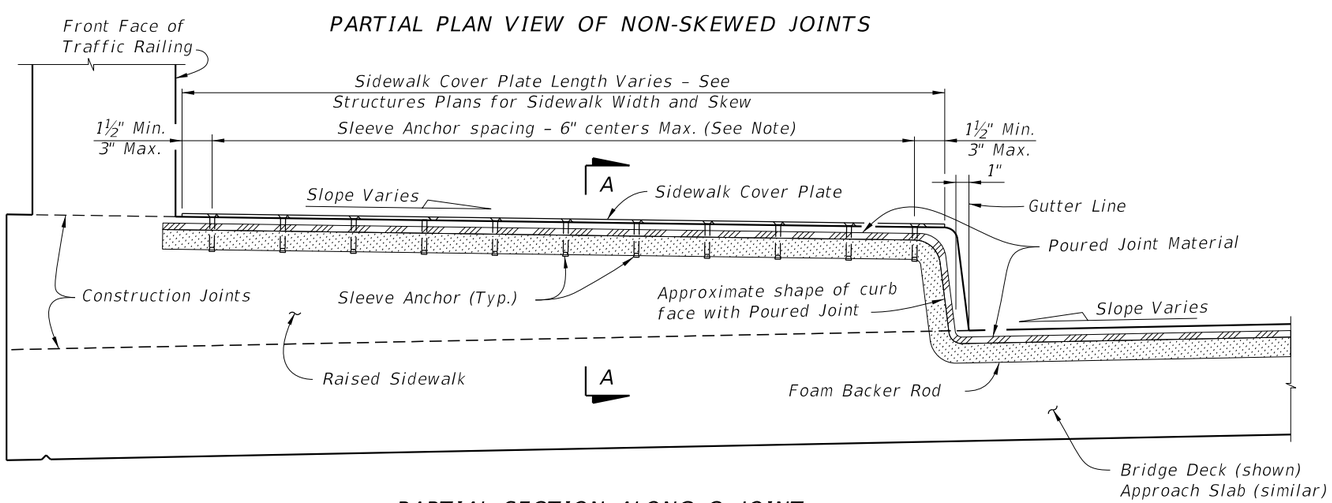


PARTIAL SECTION ALONG ℄ JOINT

RAISED SIDEWALK DETAIL

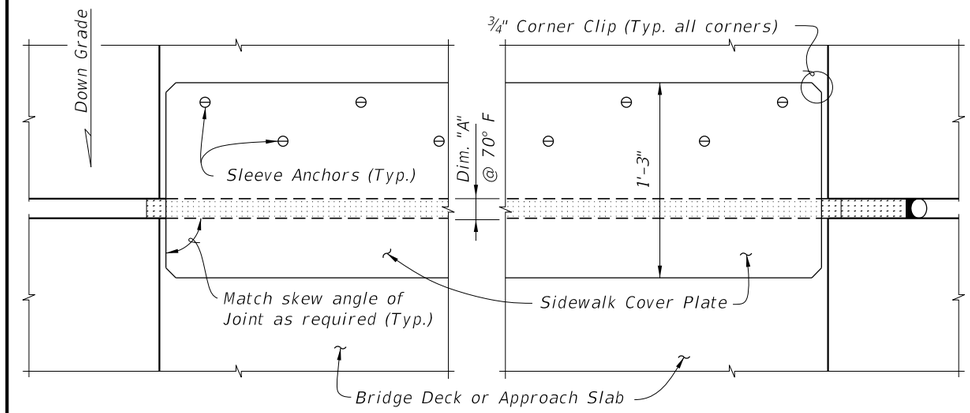


PARTIAL PLAN VIEW

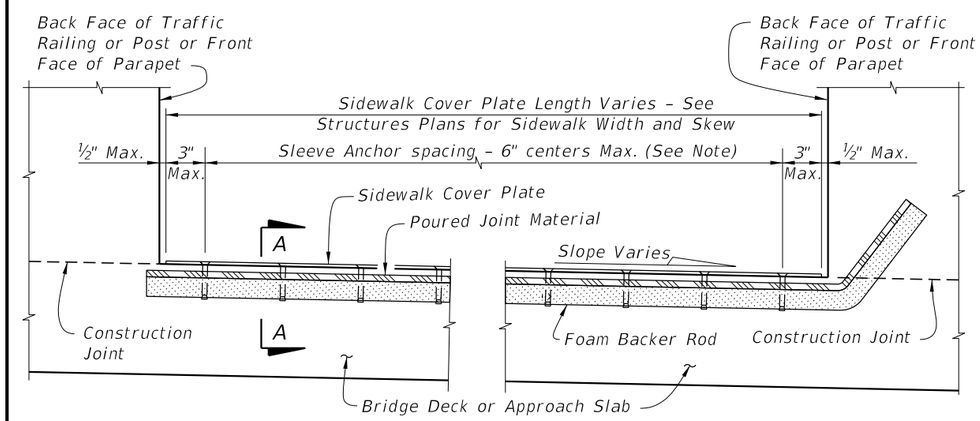


PARTIAL SECTION ALONG ℄ JOINT

FLUSH SIDEWALK DETAIL

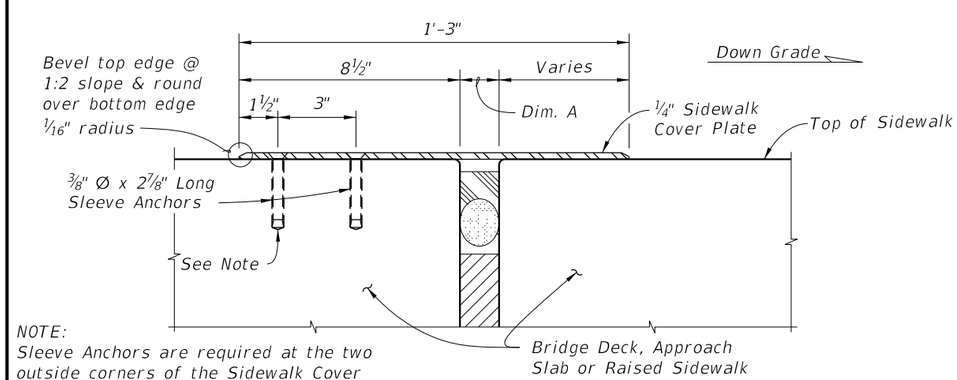


NOTE:
Sleeve Anchors are required at the two outside corners of the Sidewalk Cover Plate. Space Sleeve Anchors uniformly between the corner anchors.

SECTION A-A

10:11:06 AM

10/17/2024

| LAST REVISION | REVISION | DESCRIPTION: | FDOT | FY 2025-26 STANDARD PLANS | EXPANSION JOINT SYSTEM - POURED JOINT WITH BACKER ROD | INDEX | SHEET |
|---|---|---|---|---|---|---|---|
| 07/01/13 | | | | | | 458-110 | 2 of 2 |

Docusign Envelope ID: F54DB230-A150-452A-B3F0-14C4A48C193C

CONDUIT GENERAL NOTES:

1. Furnish and install approved Conduits, Fittings and Embedded Junction Boxes (EBJ's) in accordance with Specification Sections 630 and 635, this Standard, the National Electric Code (NEC) and as directed by the Engineer.

2. Furnish and install Embedded Junction Boxes (EJB) with weatherproof covers sized in accordance with NEC requirements and the maximum size limits shown. Install EJB adjacent to the Begin and End of Bridges, Begin and End of Retaining Walls, (except omit EJB adjacent to the Bridge unless a precast Traffic Railing with junction slab is used), and at other locations as necessary to maintain 300 foot maximum spacing. See Plans for additional locations and details.

3. For Conduit not designated for future use, see Plans for details. For Conduit designated for future use, stub out and cap the Conduit. Drive a 3'-0"± long ¾" (min.) diameter Steel Pipe flush with the ground line adjacent to the end of the Conduit as shown on Sheets 2, 3 or 4. Provide the location of the stub out with Steel Pipe to the Engineer for inclusion on the As-Built Plans.

4. Shift vertical Railing reinforcement symmetrically to provide 2" clearance to EJB. Space shifted vertical reinforcement at minimum 3" centers. Cut horizontal Railing reinforcement to provide 2" clearance to EJB and provide supplemental reinforcement as shown. To facilitate placement of Conduit, Expansion Fittings, and Expansion/Deflection Fittings, shift reinforcing a maximum of 1" but do not cut railing reinforcing to facilitate Conduit or Fittings. Do not bundle Conduits, or Conduit and horizontal reinforcement.

5. Place conduits as indicated in this Standard unless Structures Plans indicate fewer.

* Reduce to 6" maximum when installed in Pedestrian/ Bicycle Railings.

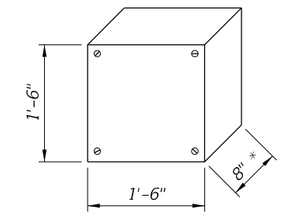


EJB "A"
Double or Triple Conduit
(Maximum Dimensions)

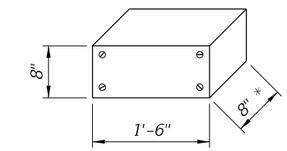


EJB "B"
Single Conduit
(Maximum Dimensions)

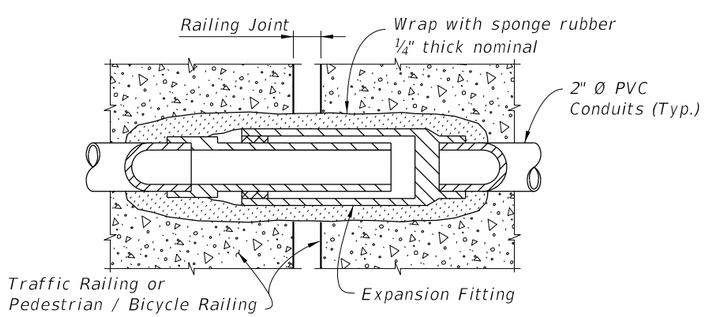


DETAIL "A"
EXPANSION FITTING DETAIL

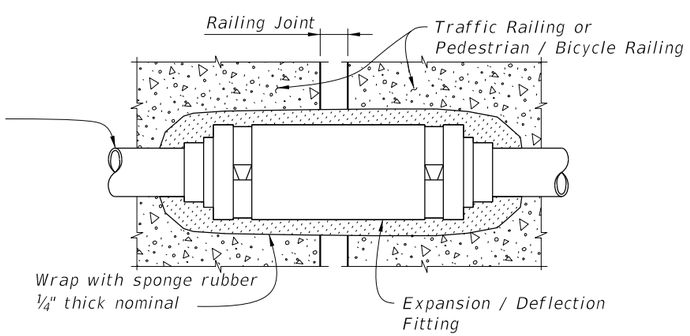


DETAIL "B" EXPANSION / DEFLECTION
FITTING DETAIL (CONCRETE / CONCRETE)

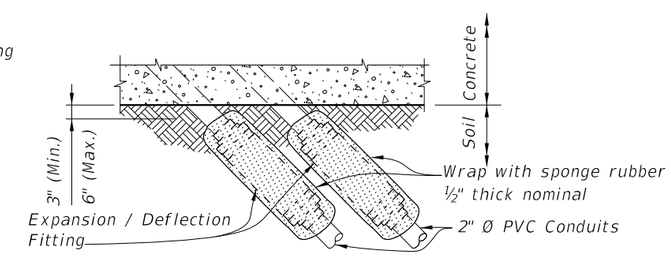


DETAIL "C" EXPANSION / DEFLECTION
FITTING DETAIL (CONCRETE / SOIL)

GENERAL

| LAST REVISION | REVISION | DESCRIPTION: | | | INDEX | SHEET |
|---|---|---|---|---|---|---|
| 11/01/23 | | | FY 2025-26 STANDARD PLANS | CONDUIT DETAILS - EMBEDDED | 630-010 | 1 of 4 |

10/17/2024 10:42:16 AM

Docusign Envelope ID: F54DB230-A150-452A-B3F0-14C4A48C193C

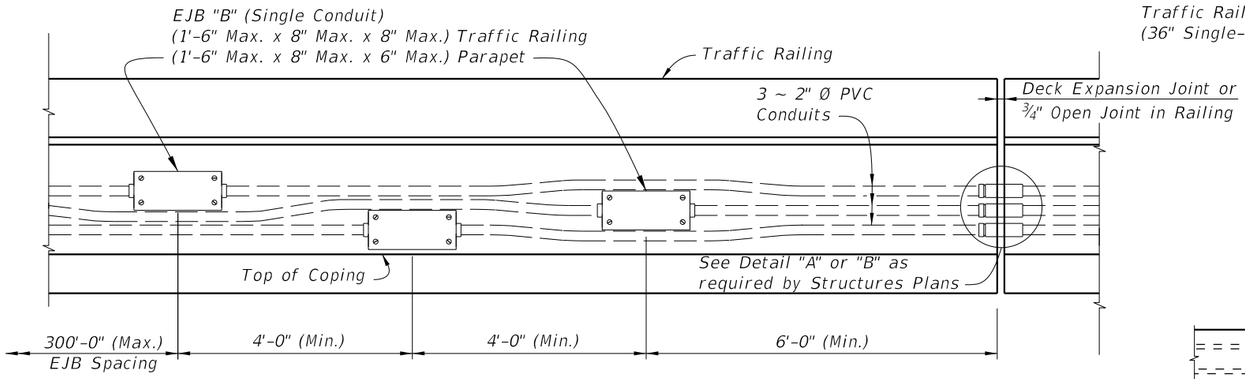


EJB "B" DETAIL

* 36" Single-Slope Traffic Railing shown, other Traffic Railings and Pedestrian/Bicycle Railings similar.
** EJB "A" shown, EJB "B" similar. See EJB "B" Detail.
*** See Sheet 1, Note 5.

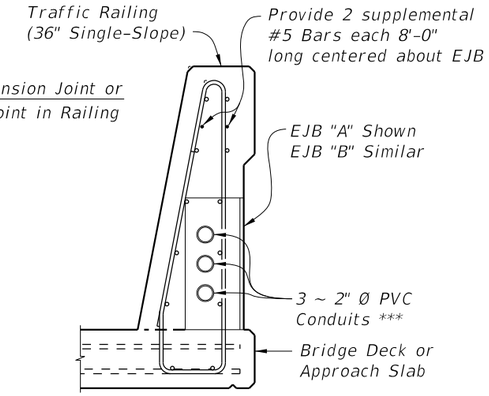


SECTION THRU TRAFFIC RAILING AT EJB (36" SINGLE-SLOPE SHOWN, 42" SINGLE-SLOPE SIMILAR)

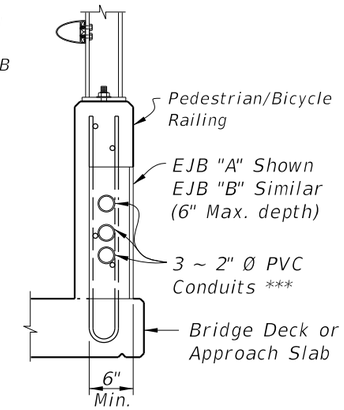


SECTION THRU PEDESTRIAN / BICYCLE RAILING AT EJB

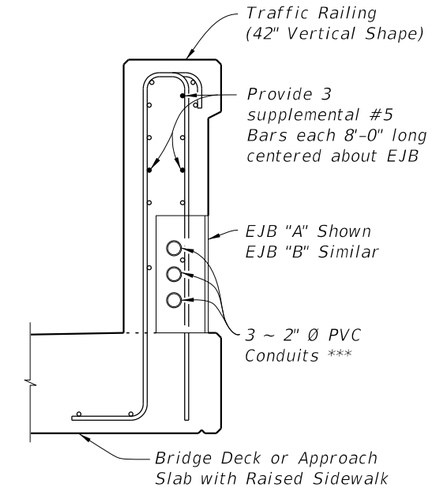


SECTION THRU TRAFFIC RAILING AT EJB (42" VERTICAL SHAPE SHOWN, 32" VERTICAL SHAPE SIMILAR)

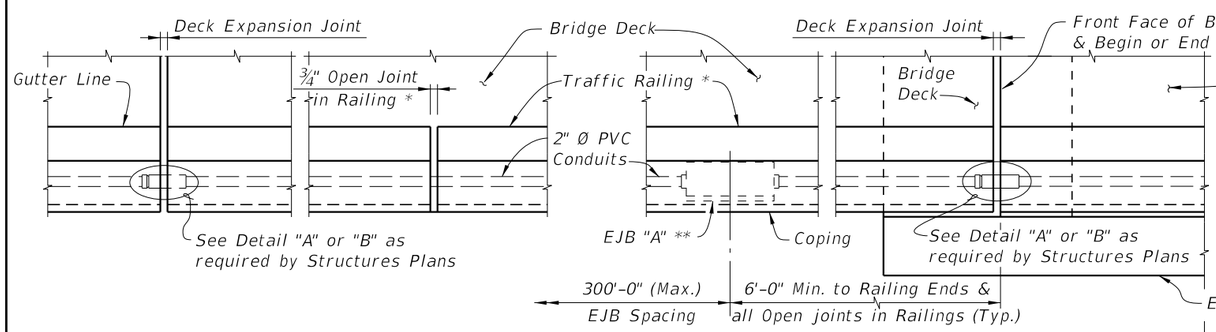


PARTIAL PLAN VIEW ALONG BRIDGE

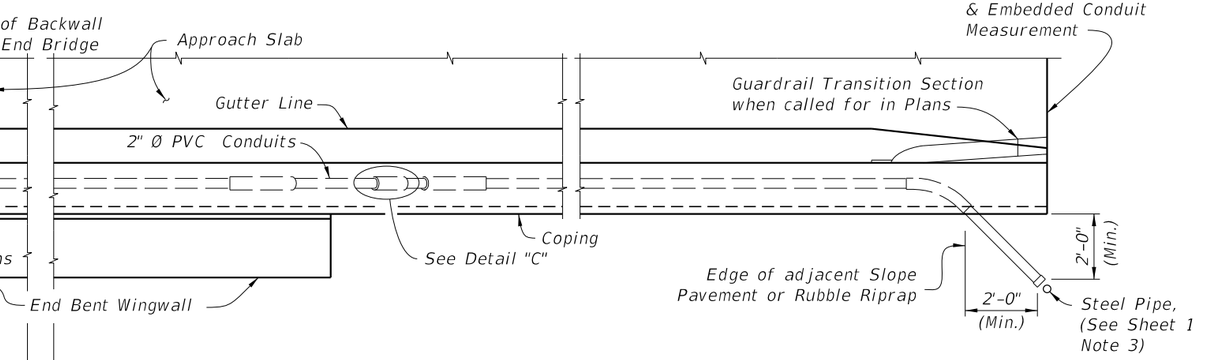


PARTIAL PLAN VIEW ALONG APPROACH SLAB WITHOUT CONTINUING TRAFFIC RAILING

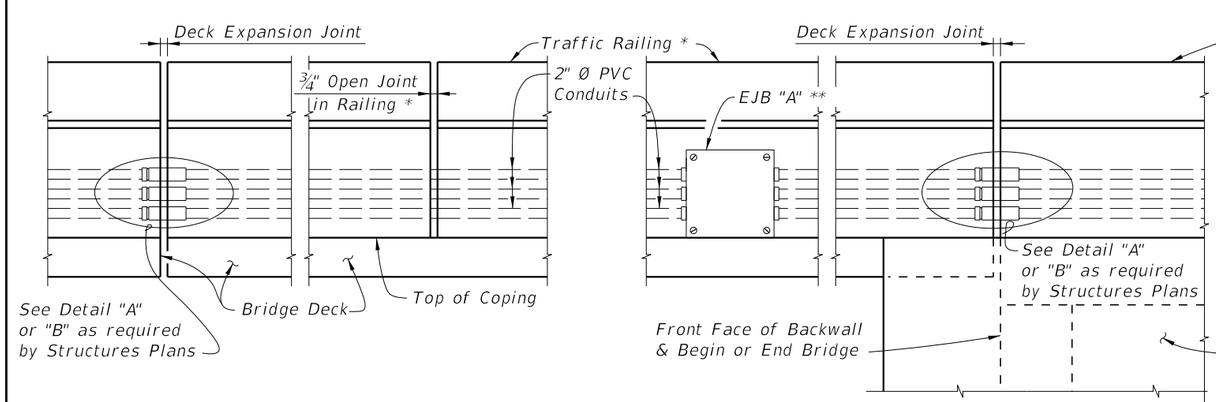


PARTIAL ELEVATION VIEW ALONG BRIDGE

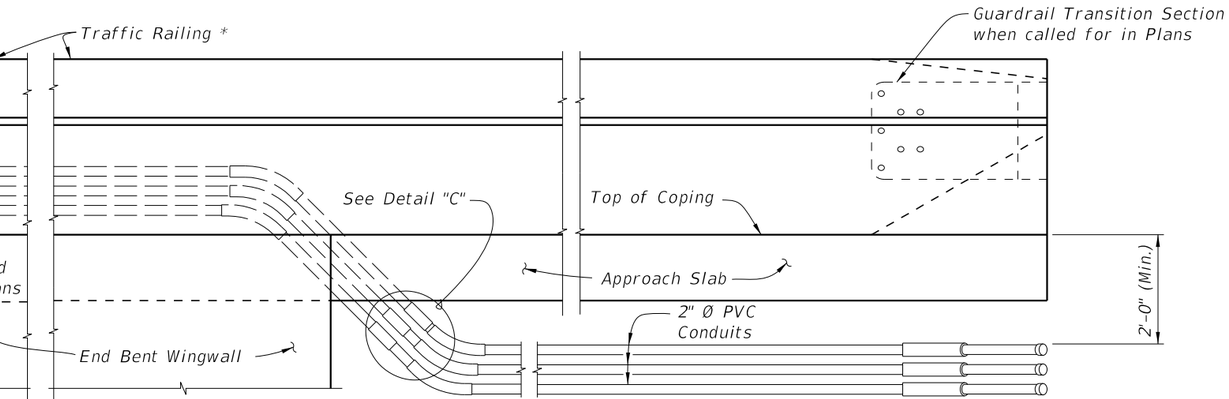


PARTIAL ELEVATION VIEW ALONG APPROACH SLAB WITHOUT CONTINUING TRAFFIC RAILING

BRIDGE AND APPROACH SLAB WITH EDGE RAILING

10:42:23 AM
10/17/2024

| LAST REVISION | REVISION | DESCRIPTION: | | | INDEX | SHEET |
|---|---|---|---|---|---|---|
| 11/01/22 | | | FY 2025-26 STANDARD PLANS | CONDUIT DETAILS - EMBEDDED | 630-010 | 2 of 4 |

Docusign Envelope ID: F54DB230-A150-452A-B3F0-14C4A48C193C

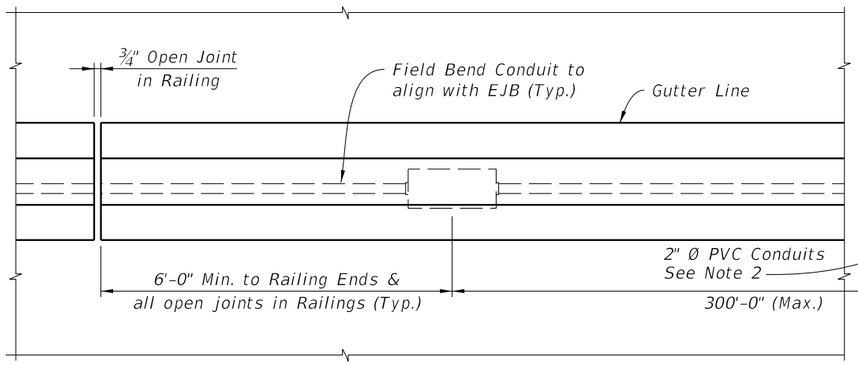


PARTIAL PLAN VIEW OF MEDIAN TRAFFIC RAILING
ALONG BRIDGE

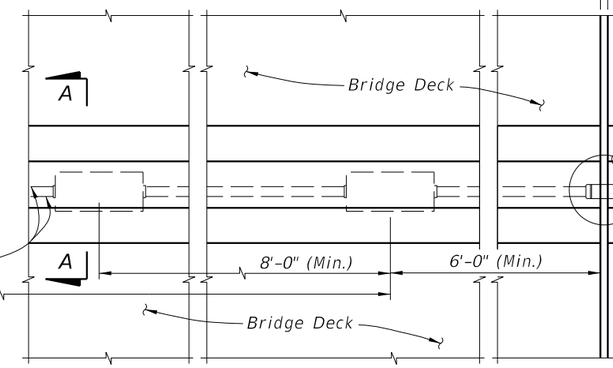


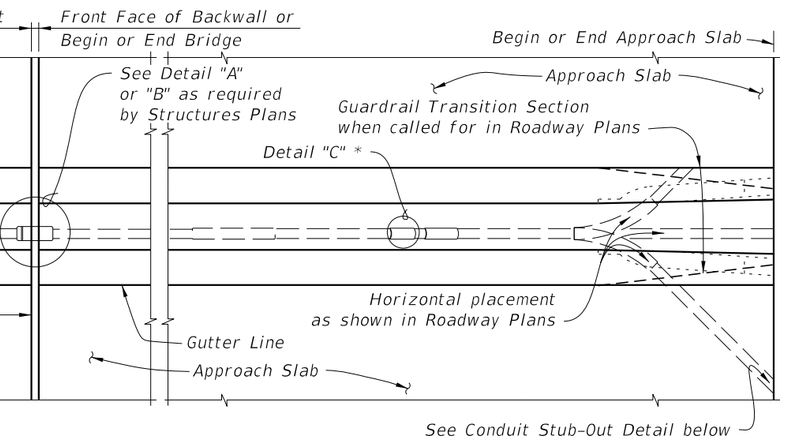


PARTIAL PLAN VIEW OF MEDIAN TRAFFIC RAILING
ALONG APPROACH SLAB

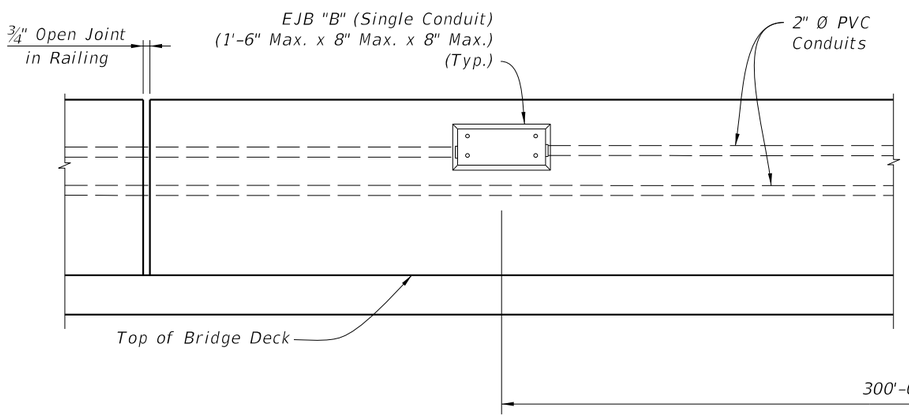


PARTIAL ELEVATION VIEW OF MEDIAN TRAFFIC RAILING
ALONG BRIDGE

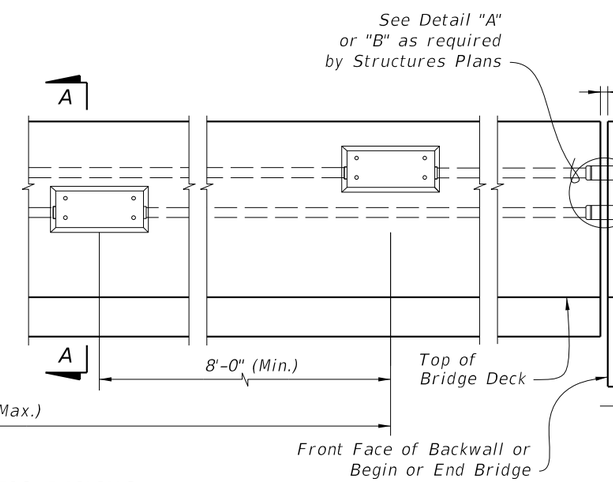


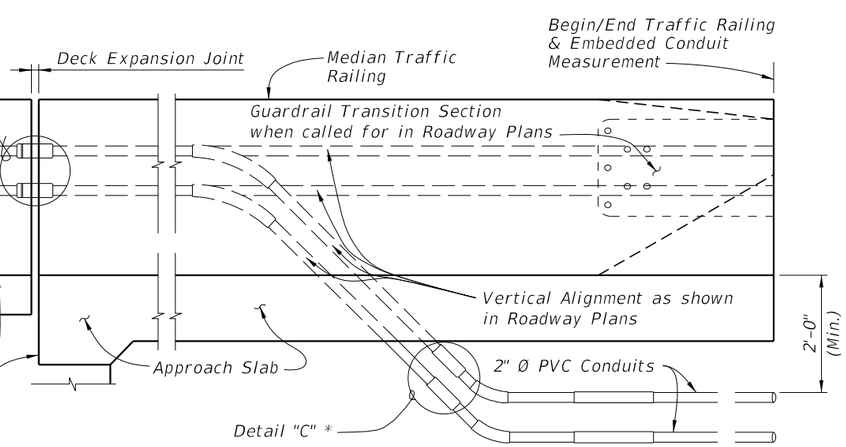


PARTIAL ELEVATION VIEW OF MEDIAN TRAFFIC RAILING
ALONG APPROACH SLAB

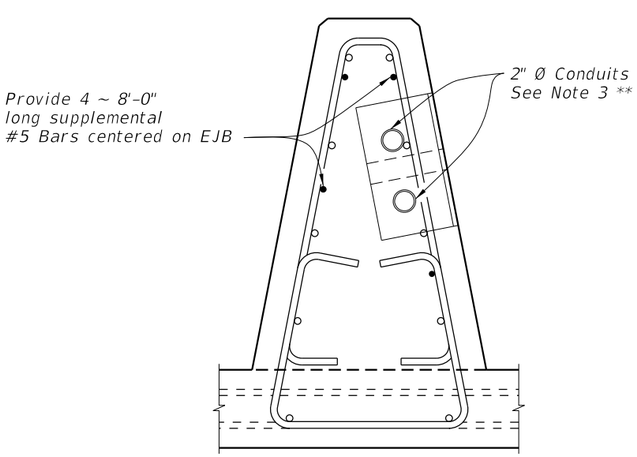


SECTION A-A
Median Traffic Railing (See Note 4)

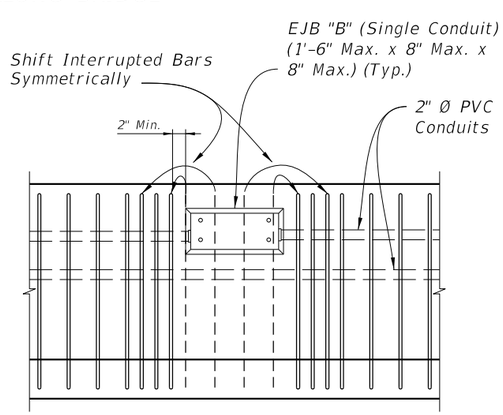


JUNCTION BOX REBAR CONFLICT
ELEVATION

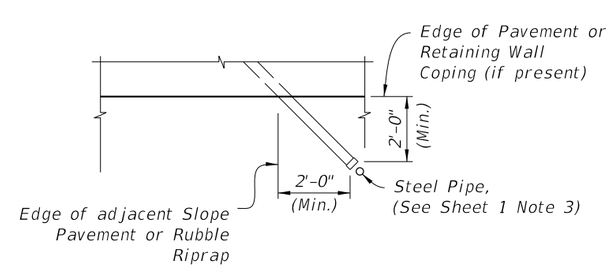


CONDUIT STUB-OUT DETAIL

NOTES:

1. Work this sheet with Index 521-426.
2. Adjust Conduit horizontally and vertically as necessary to align with EJB "B".
3. When installed in traffic face of a railing, use EJB "B" with a minimum ⅜" thick galvanized steel cover.
4. Position EJB such that, with gasket and cover plate secured and in place, cover plate is flush with the railing face. Flush is +⅛" to -¼" measured with a horizontal straightedge.

* For non-continuing Traffic Railing only.
** See Sheet 1, Note 5

BRIDGE AND APPROACH SLAB WITH MEDIAN TRAFFIC RAILING

10/17/2024 10:42:29 AM

| LAST REVISION | REVISION | DESCRIPTION: | FY 2025-26 STANDARD PLANS | CONDUIT DETAILS - EMBEDDED | INDEX | SHEET |
|---|---|---|---|---|---|---|
| 11/01/24 | | | | | 630-010 | 3 of 4 |

Docusign Envelope ID: F54DB230-A150-452A-B3F0-14C4A48C193C

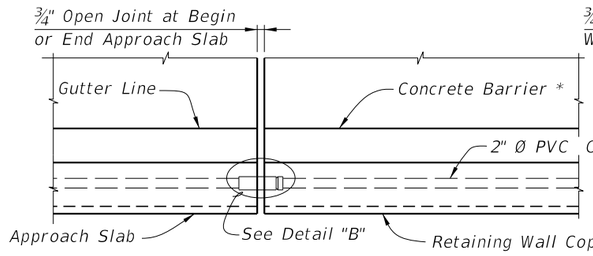


PARTIAL PLAN VIEW ALONG APPROACH SLAB WITH CONTINUING CONCRETE BARRIER

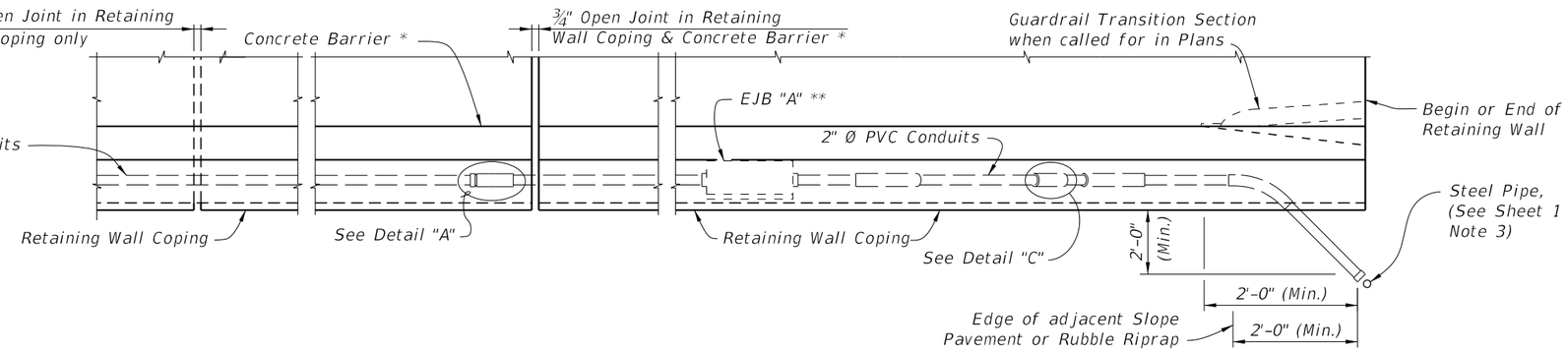


PARTIAL PLAN VIEW ALONG RETAINING WALL

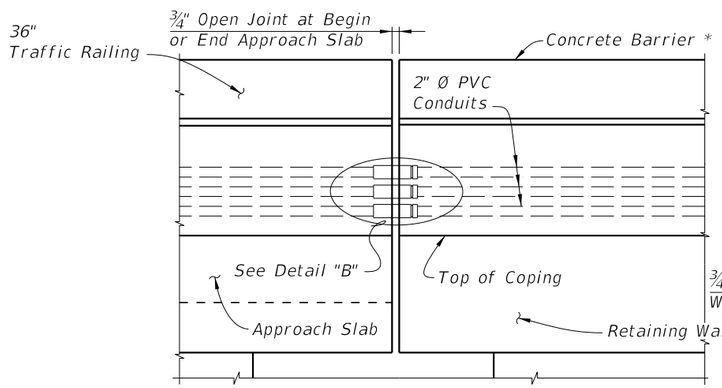


PARTIAL ELEVATION VIEW ALONG APPROACH SLAB WITH CONTINUING Concrete Barrier (Retaining Wall Mounted Concrete Barrier shown, Traffic Railing similar)

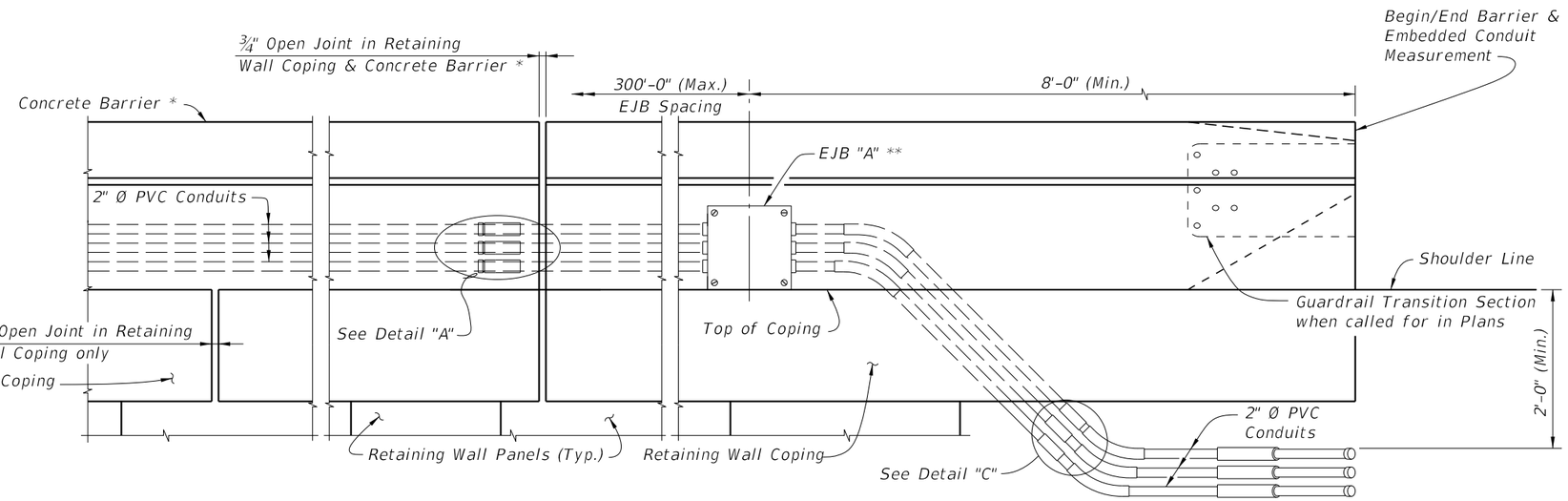


PARTIAL ELEVATION VIEW ALONG RETAINING WALL

* Index 521-610 Concrete Barrier/Junction Slab shown, other railings and parapets similar.
** EJB "A" shown EJB "B" similar. See EJB "B" Detail on Sheet 2.

10:42:36 AM

10/17/2024

APPROACH SLAB AND RETAINING WALL WITH CONCRETE BARRIER

| LAST REVISION | REVISION | DESCRIPTION: | FDOT FY 2025-26 STANDARD PLANS | CONDUIT DETAILS - EMBEDDED | INDEX | SHEET |
|---|---|---|---|---|---|---|
| 11/01/22 | | | | | 630-010 | 4 of 4 |

Docusign Envelope ID: F54DB230-A150-452A-B3F0-14C4A48C193C

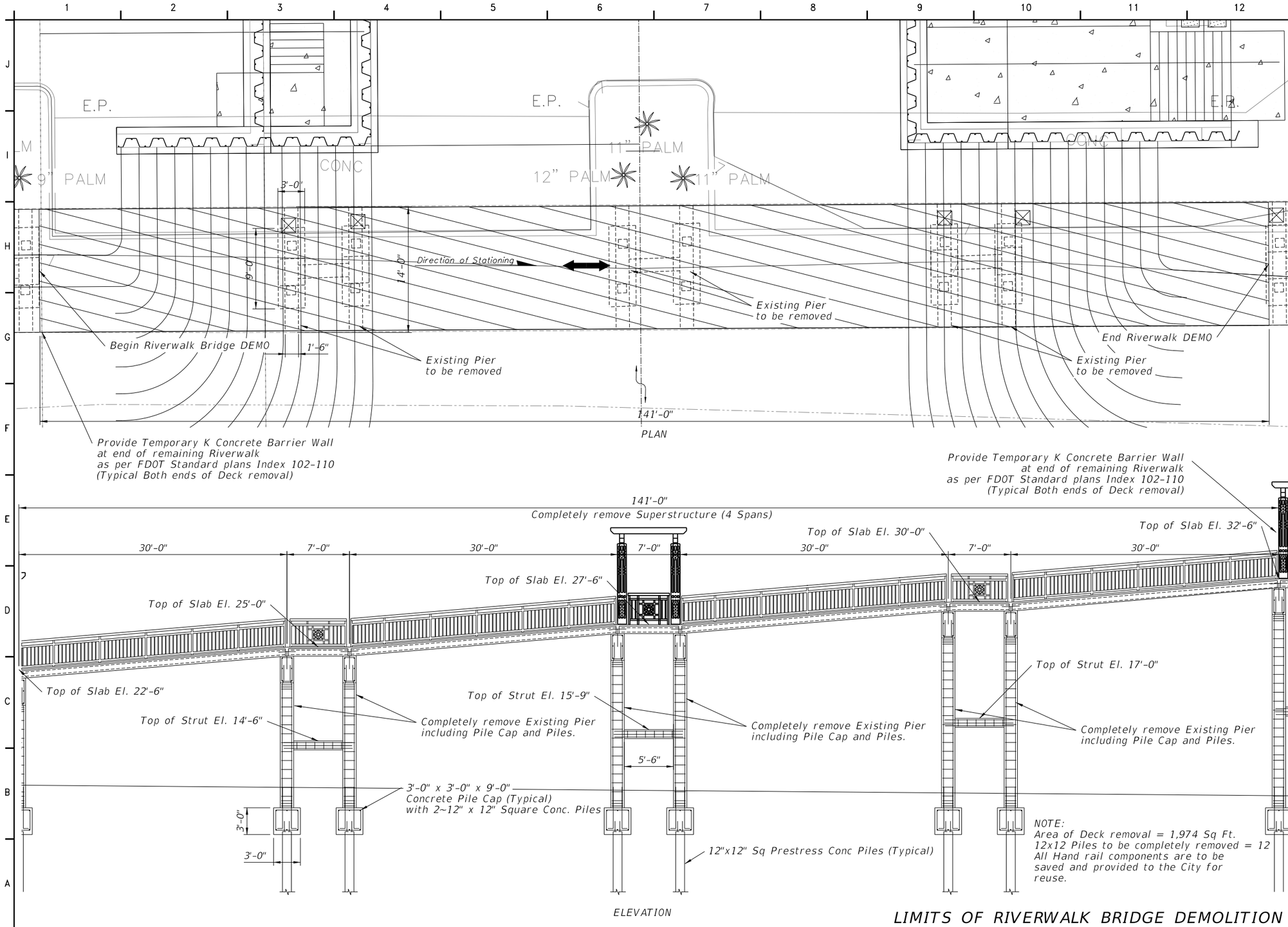


wsp
5015 S. Florida Avenue, Suite 301
Lakeland, FL 33813
P+ 1 863-667-2345
wsp.com

ED J. MORALES Jr., P.E.
FLORIDA PE LICENSE NO. 44068

PROJECT:
**MCCOYS CREEK CHANNEL IMPROVEMENTS/ RESTORATION OUTFALL SEGMENT**
JACKSONVILLE, FLORIDA

**CITY OF JACKSONVILLE**
214 NORTH HOGAN ST.
JACKSONVILLE, FL 32202

WSP PROJECT NO:
6735189428.06

MORALES CONSULTING ENGINEERS
3832-010 Baymeadows Rd,
Suite 132
Jacksonville, Florida 32217
office: 904.434-4366
www.morales-ce.com
Certificate of Authorization No. 30712

| | |
|---|---|
| DESIGNED BY: | EJM Jr. |
| DRAWN BY: | EJM Jr. |
| CHECKED BY: | EJM |
| APPROVED BY: | EJM Jr. |
| DATE: | 12/10/2022 |

SHEET TITLE:
*RIVERWALK BRIDGE DEMO PLAN & ELEVATION*

| SHEET NUMBER: | REV. # |
|---|---|
| | |
| SHEET OF 54 SHEETS | |

$(getvar, "dwgprefix")$(getvar, "dwgname") - $(getvar, "ctab") $(edtime, 0, Mo/DD/YYYY H:MMam/pm) $(getvar, "loginname")

Docusign Envelope ID: F54DB230-A150-452A-B3F0-14C4A48C193C

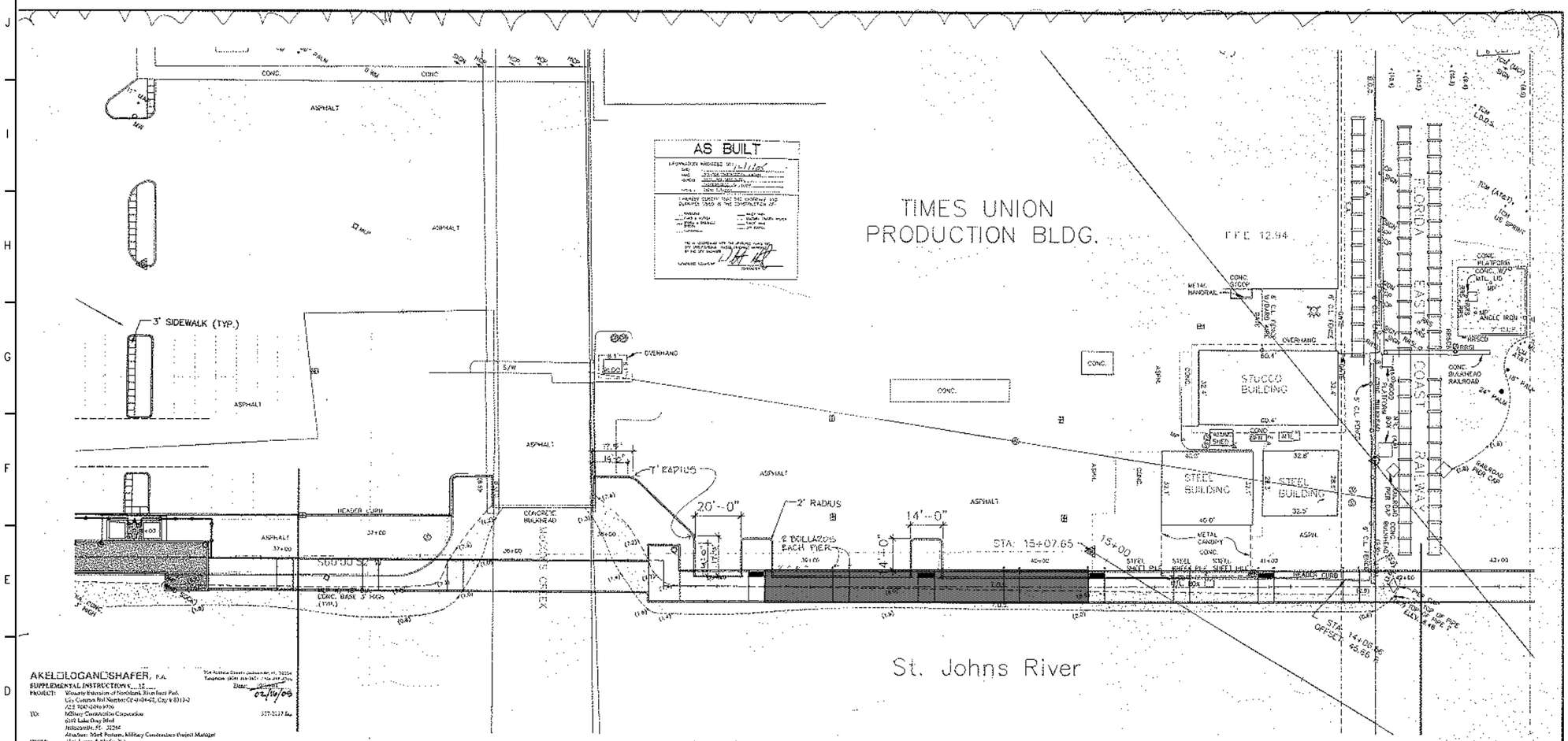


AKEL LOGAN SHAFER, P.A.
SUPPLEMENTAL INSTRUCTION # 12
PROJECT: Westerly Extension of Northbank Riverfront Park
City Contract Bid Number CP-01-04-02, Dgn # 8313-2
AE# 9040-2086-9706
TO: Military Construction Corporation
6269 Lake Gray Blvd
Jacksonville, FL 32244
Attention: Mark Pedano, Military Construction Project Manager
FROM: Akel, Logan & Shafer, P.A.
INITIATED: ☑ Project Manager Michele Hibbens, AIA
— Civil Engineer
— Structural Engineer
— Mechanical Engineer
— Electrical Engineer
— Landscape Architect
Date: 02/10/05
327-3137 fax

DIRECTION:
The requirements for the Elevated Walk Screen, Wall and Signage Package Items C and D have been replaced with Landscape Island Screen "Walls" and with Historic Graphics at Elevated Walk Trellis, montage (12'-0" x 7'-0" plates), and moisture barrier (textured, Stucco).
1. Site Walls are attached for cost modifications.
~~2. Landscape Walls: Attached to Site Walls with dowels.~~
~~3. Graphics Panels: Collapsible Panels will be installed in Trellis Bays.~~
~~4. Graphic Panels: Graphics Panels will be installed in Trellis Bays.~~
~~5. Graphic Panels: Graphics Panels to be installed in Trellis Bays.~~ (REVISED)

This Supplemental Instruction is given with the expressed understanding that it does not constitute basis for change in amount or time of any Contract or Purchase Order now in existence. If you do not concur, DO NOT PROCEED and notify this office immediately.

Submitted by Michele Hibbens, AIA, Project Manager

Copy to: Steven D. Lisko, P.E., Manager Architectural/Structural & Parks Design Section
Paul Masters, Contract Administrator, COJ
Frances Smith, Business Operations, Civil Services, Inc.
Tom Thomas, Contract Services Manager, Florida Power/Utilities

## LEGEND

| MARK | DESCRIPTION | MARK | DESCRIPTION |
|---|---|---|---|
| C1 | 2" CONCRETE BAND (6" AT ALTERNATE ONE) SCORED APPROXIMATELY 2'-0" O.C. | P2 | CONCRETE PAVER COLOR: TAUPE |
| C2 | CONCRETE (WITHOUT ADMIX), COARSE ROCK SALT FINISH, SCORED AT 2' GRID | P3 | CONCRETE PAVER COLOR: NATURAL |
| S1 | STAIN COLOR: BROWN | P4 | CONCRETE PAVER COLOR: TAN |
| S2 | STAIN COLOR: TERRA COTTA | P5 | CONCRETE PAVER COLOR: CONCRETE RIVER - CHARCOAL |
| S3 | STAIN COLOR: GREEN | P6 | CONCRETE PAVER COLOR: RED |
| S4 | STAIN COLOR: AMBER | P7 | CONCRETE PAVER COLOR: BROWN |
| P1 | CONCRETE PAVER COLOR: DARK ORANGE | P8 | CONCRETE PAVER COLOR: BLEND TRI COLOR |

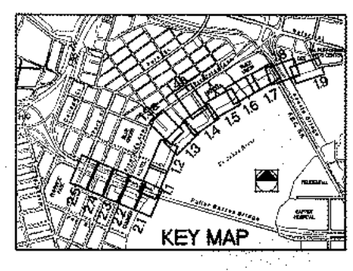


NORTH

GRAPHIC SCALE
20 10 0 20 40

| NO | BY | DATE | REVISIONS |
|---|---|---|---|
| 1 | | | |
| 2 | | | |
| 3 | | | |
| 4 | | | |
| 5 | | | |

AKEL LOGAN SHAFER
ARCHITECTS AND PLANNERS
100 Riverside Avenue / Jacksonville, Florida 32202
Telephone (904) 356-0154 / Fax (904) 356-4029

DESIGNER MSL
DRAWN BY BJR
DATE 3/9/05
CHECKED BY MSL
DATE 3/9/05

CITY OF JACKSONVILLE
DEPARTMENT OF PUBLIC WORKS
ENGINEERING DIVISION

PROJECT NO. : 9786
DATE : 2/1/02
SCALE : 1"=20'

WESTERLY EXTENSION OF
NORTHBANK RIVERFRONT PARK
JACKSONVILLE FLORIDA
MACCOY'S CREEK GARDENS / BRIDGE MUSEUM

SHEET NO. HS-1.7
DWG. NO.

wsp
5015 S. Florida Avenue, Suite 301
Lakeland, FL 33813
P+ 1 863-667-2345
wsp.com

ED J. MORALES Jr., P.E.
FLORIDA PE LICENSE NO. 44068

PROJECT:
**MCCOYS CREEK CHANNEL IMPROVEMENTS/ RESTORATION OUTFALL SEGMENT**
JACKSONVILLE, FLORIDA

**CITY OF JACKSONVILLE**
214 NORTH HOGAN ST.
JACKSONVILLE, FL 32202

WSP PROJECT NO:
6735189428.06

MORALES CONSULTING ENGINEERS
3832-010 Baymeadows Rd,
Suite 132
Jacksonville, Florida 32217
office: 904.434-4366
www.morales-ce.com
Certificate of Authorization No. 30712

| | |
|---|---|
| DESIGNED BY: | EJM Jr. |
| DRAWN BY: | EJM Jr. |
| CHECKED BY: | EJM |
| APPROVED BY: | EJM Jr. |
| DATE: | 12/10/2022 |

SHEET TITLE:
*EXISTING BRIDGE AS-BUILT LOCATION*

| SHEET NUMBER: | REV. # |
|---|---|
| | |

SHEET OF 54 SHEETS

$(getvar, "dwgprefix")$(getvar, "dwgname") – $(getvar, "ctab") $(edtime, 0, Mo/DD/YYYY H:MMam/pm) $(getvar, "loginname")

Docusign Envelope ID: F54DB230-A150-452A-B3F0-14C4A48C193C

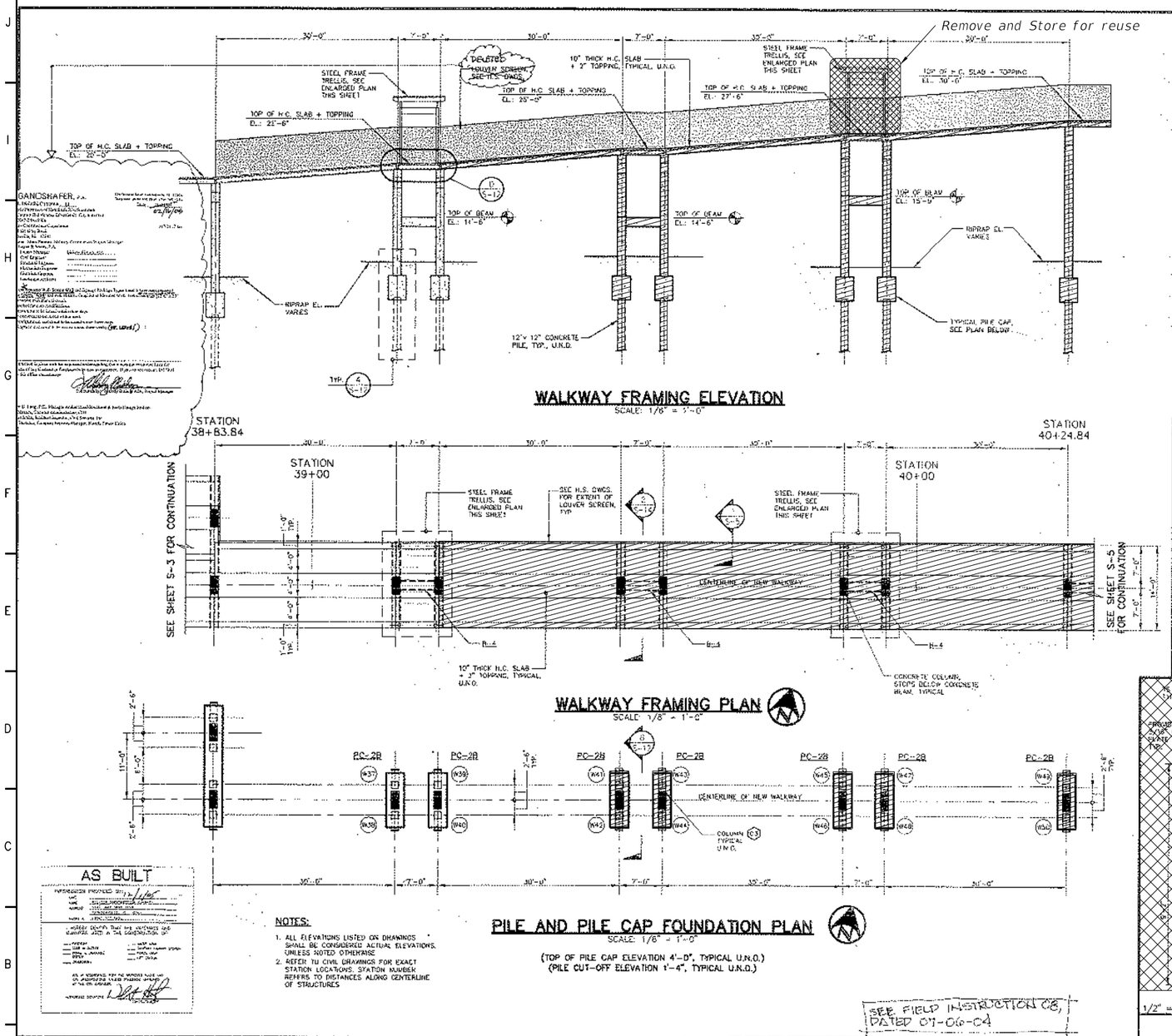


| NO. | BY | DATE | REVISIONS |
|---|---|---|---|
| 1 | | | |
| 2 | | | |
| 3 | | | |
| 4 | | | |
| 5 | | | |
| 6 | | | |

AKEL ☐ LOGAN ☐ SHAFER
ARCHITECTS AND PLANNERS
105 Riverside Avenue / Jacksonville, Florida 32202
Telephone (904) 356-2554 / Fax (904) 356-4889

SURESH PATEL AND ASSOCIATES, INC.
CONSULTING ENGINEERS
ENGINEERING BUSINESS #27241
2307 SPRING GLEN ROAD JACKSONVILLE, FLORIDA 32207
PH. 904-737-2204

DESIGNED ..... EJM/JR.
DRAWN BY ..... EJM/JR.
DATE ..... 12/10/22
CHECKED BY ..... EJM/JR.
DATE ..... 12/10/22

CITY OF JACKSONVILLE
DEPARTMENT OF PUBLIC WORKS
ENGINEERING DIVISION

PROJECT NO. 9706
DATE: APR 01 2002 08-24-00
SCALE: 1/8" = 1'-0"

WESTERLY EXTENSION OF
NORTHBANK RIVERFRONT PARK
JACKSONVILLE FLORIDA
ELEVATED WALKWAY STARTING STATION 38+83.84

SHEET NO. S-4 OF
DWG. NO.

wsp
5015 S. Florida Avenue, Suite 301
Lakeland, FL 33813
P+ 1 863-667-2345
wsp.com

ED J. MORALES Jr., P.E.
FLORIDA PE LICENSE NO. 44068

PROJECT:
MCCOYS CREEK CHANNEL IMPROVEMENTS/ RESTORATION OUTFALL SEGMENT
JACKSONVILLE, FLORIDA

CITY OF JACKSONVILLE
214 NORTH HOGAN ST.
JACKSONVILLE, FL 32202

WSP PROJECT NO:
6735189428.06

MORALES CONSULTING ENGINEERS
3832-010 Baymeadows Rd,
Suite 132
Jacksonville, Florida 32217
office: 904.434-4366
www.morales-ce.com
Certificate of Authorization No. 30712

| | |
|---|---|
| DESIGNED BY: | EJM Jr. |
| DRAWN BY: | EJM Jr. |
| CHECKED BY: | EJM |
| APPROVED BY: | EJM Jr. |
| DATE: | 12/10/2022 |

SHEET TITLE:
EXISTING BRIDGE PLAN AND ELEVATION

| SHEET NUMBER: | REV. # |
|---|---|
| | |
| SHEET OF 54 SHEETS | |

$(getvar, "dwgprefix")$(getvar, "dwgname") - $(getvar, "ctab") $(edtime, 0, MM/DD/YYYY H:MMam/pm) $(getvar, "loginname")

Docusign Envelope ID: F54DB230-A150-452A-B3F0-14C4A48C193C

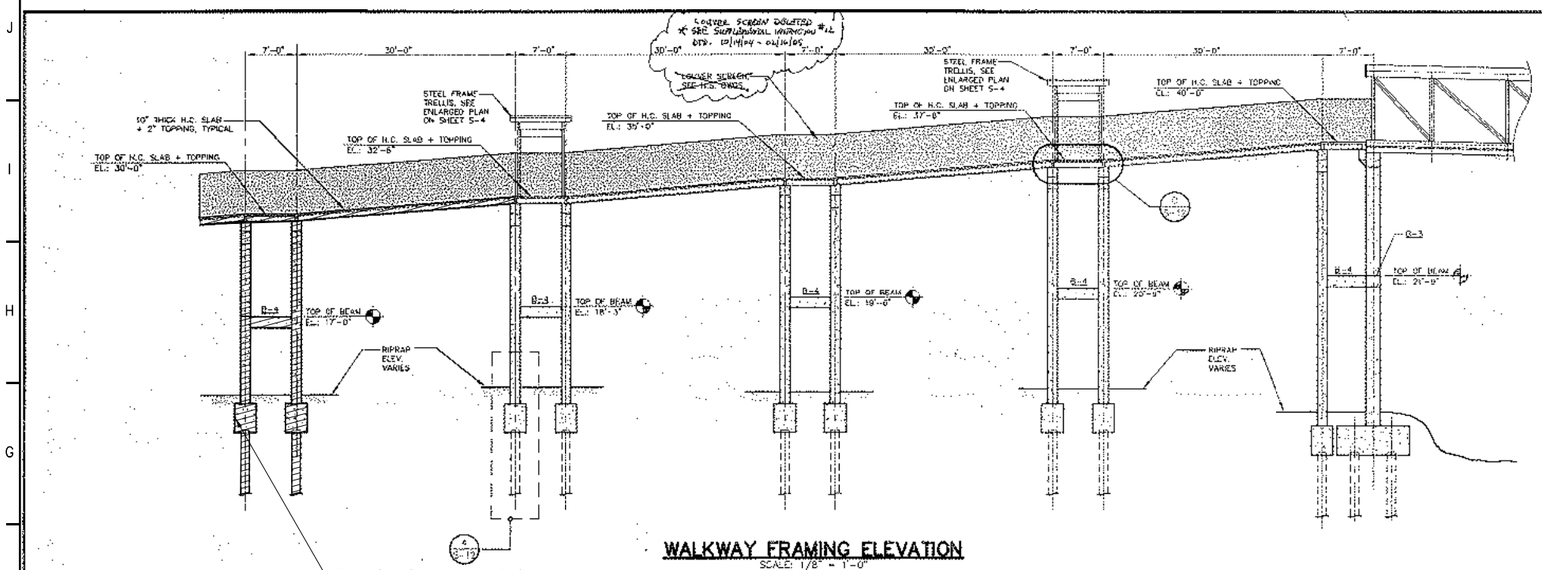


## WALKWAY FRAMING ELEVATION

SCALE: 1/8" = 1'-0"

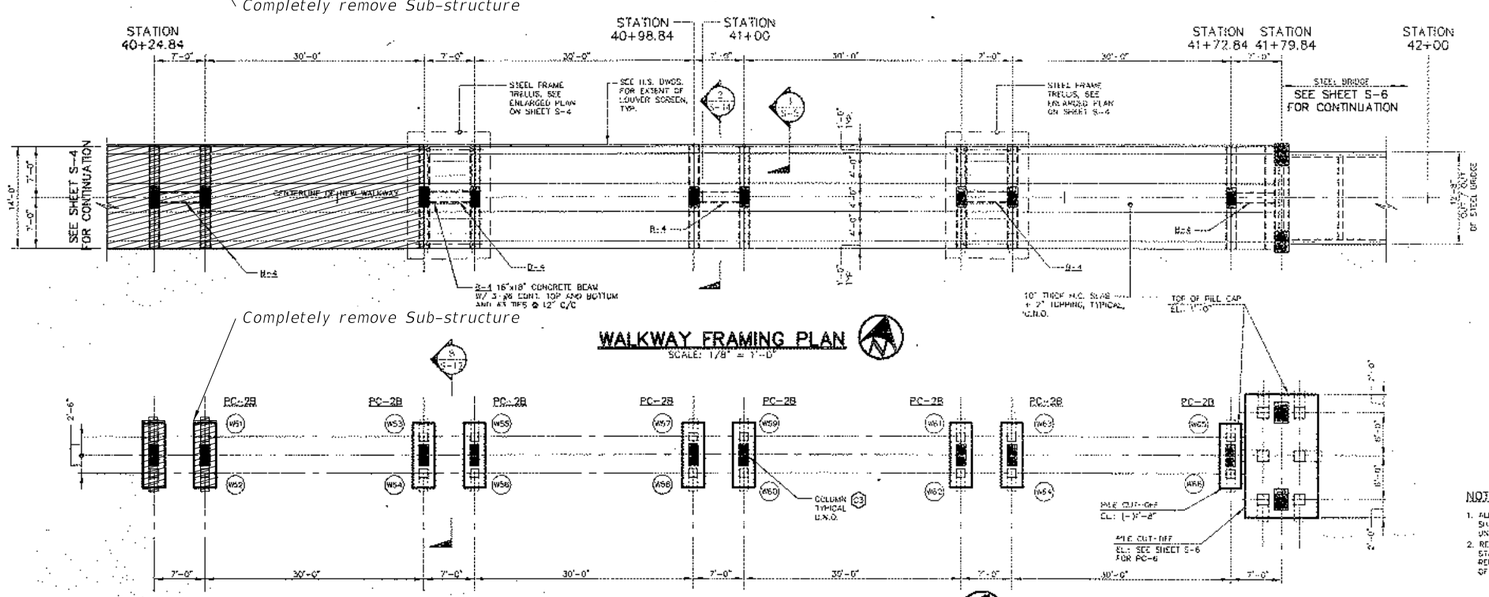


## WALKWAY FRAMING PLAN

SCALE: 1/8" = 1'-0"

## PILE AND PILE CAP FOUNDATION PLAN

SCALE: 1/8" = 1'-0"

(TOP OF PILE CAP ELEVATION 4'-0", TYPICAL U.N.O.)
(PILE CUT-OFF ELEVATION 1'-4", TYPICAL U.N.O)

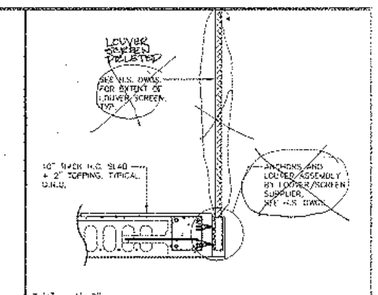


## SECTION

## AS BUILT

INFORMATION PROVIDED BY:
DATE: 12/16/05
NAME: WTL-THE CONSTRUCTION COMPANY
ADDRESS: 5137 DAVY DAVY ROAD
JACKSONVILLE, FL 32224
PHONE #: (904) 771-5551

I HEREBY CERTIFY THAT THE MATERIALS AND QUANTITIES USED IN THE CONSTRUCTION OF:

- PAVEMENT
- CURB & GUTTER
- STORM & DRAINAGE SYSTEM
- SIDEWALK
- WATER MAIN
- SANITARY SEWER SYSTEM
- FORCE MAIN
- LIFT STATION

ARE IN ACCORDANCE WITH THE APPROVED PLANS AND CITY SPECIFICATIONS, UNLESS OTHERWISE APPROVED BY THE CITY ENGINEER.

AUTHORIZED SIGNATURE: CONTRACTOR

NOTES:

1. ALL ELEVATIONS LISTED ON DRAWINGS SHALL BE CONSIDERED ACTUAL ELEVATIONS UNLESS NOTED OTHERWISE.
2. REFER TO CIVIL DRAWINGS FOR EXACT STATION LOCATIONS. STATION NUMBER REFERS TO DISTANCES ALONG CENTERLINE OF STRUCTURES.

SEE FIELD INSTRUCTION 08 DATED 07-06-04

| NO. | BY | DATE | REVISIONS |
|---|---|---|---|
| 6 | | | |
| 5 | | | |
| 4 | | | |
| 3 | | | |
| 2 | | | |
| 1 | | | |

AKEL LOGAN SHAPER ARCHITECTS AND PLANNERS
1101 Riverside Avenue • Jacksonville, Florida 32204
Telephone (904) 356-2664 / Fax (904) 356-4510

SURESH PATEL AND ASSOCIATES, INC.
CONSULTING ENGINEERS
ENGINEERING BUSINESS #1013
2901 STONE DEN ROAD JACKSONVILLE, FLORIDA 32223
Tel. 904-321-1024

DESIGN BY: J.B./SP
DRAWN BY: TMP/MCG
DATE:
CHECKED BY: J.B./SP
DATE:

CITY OF JACKSONVILLE
DEPARTMENT OF PUBLIC WORKS
ENGINEERING DIVISION

PROJECT NO.: 9706
DATE: APR 01 2009 08-26-00
SCALE: 1/8" = 1'-0"

WESTERLY EXTENSION OF
NORTHBANK RIVERFRONT PARK
JACKSONVILLE, FLORIDA
ELEVATED WALKWAY STARTING STATION 40+24.84

SHEET NO. S-5
DWG. NO.

$(getvar, "dwgprefix")$(getvar, "dwgname") – $(getvar, "ctab") $(edtime, 0, MM/DD/YYYY H:MMam/pm) $(getvar, "loginname")

wsp
5015 S. Florida Avenue, Suite 301
Lakeland, FL 33813
P+ 1 863-667-2345
wsp.com

ED J. MORALES Jr., P.E.
FLORIDA PE LICENSE NO. 44068

PROJECT:
**MCCOYS CREEK CHANNEL IMPROVEMENTS/ RESTORATION OUTFALL SEGMENT**
JACKSONVILLE, FLORIDA

**CITY OF JACKSONVILLE**
214 NORTH HOGAN ST.
JACKSONVILLE, FL 32202

WSP PROJECT NO:
6735189428.06

MORALES CONSULTING ENGINEERS
3832-010 Baymeadows Rd,
Suite 132
Jacksonville, Florida 32217
office: 904.434-4366
www.morales-ce.com
Certificate of Authorization No. 30712

| | |
|---|---|
| DESIGNED BY: | EJM Jr. |
| DRAWN BY: | EJM Jr. |
| CHECKED BY: | EJM |
| APPROVED BY: | EJM Jr. |
| DATE: | 12/10/2022 |

SHEET TITLE:
*EXISTING BRIIDGE PLAN AND ELEVATION*

| SHEET NUMBER: | REV. # |
|---|---|
| | |

SHEET OF 54 SHEETS

Docusign Envelope ID: F54DB230-A150-452A-B3F0-14C4A48C193C

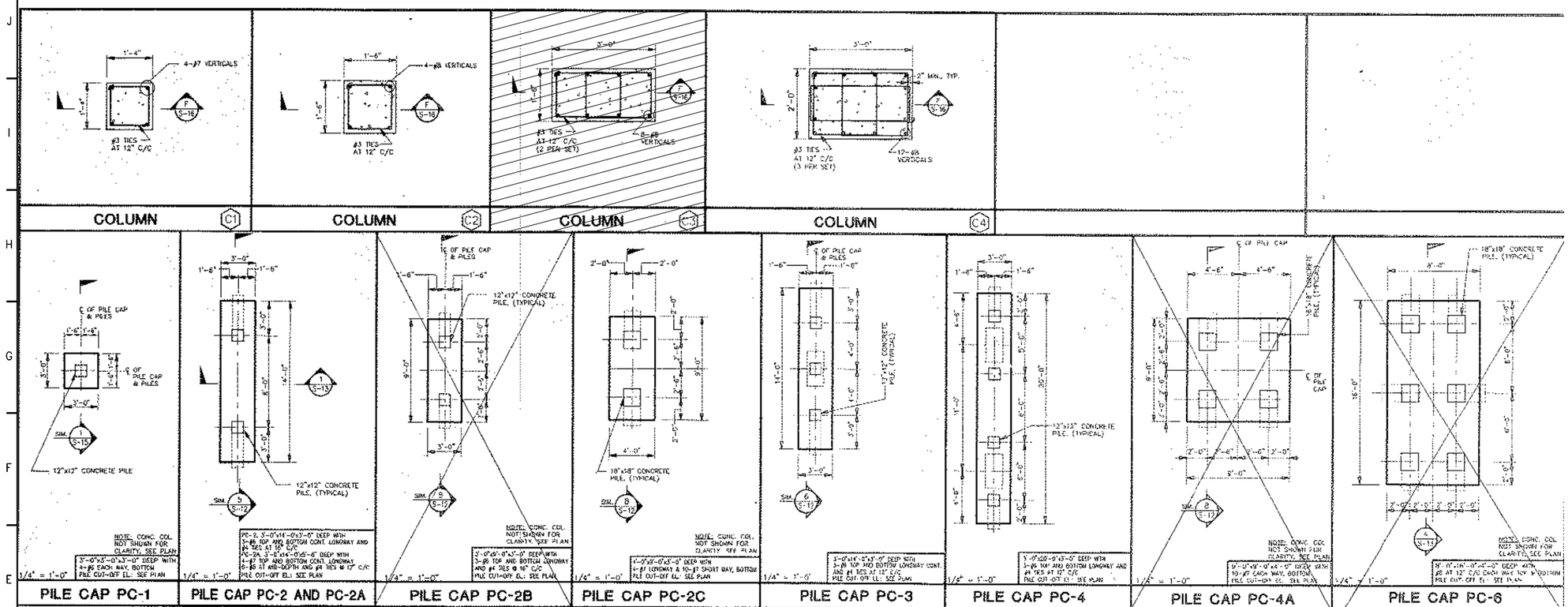


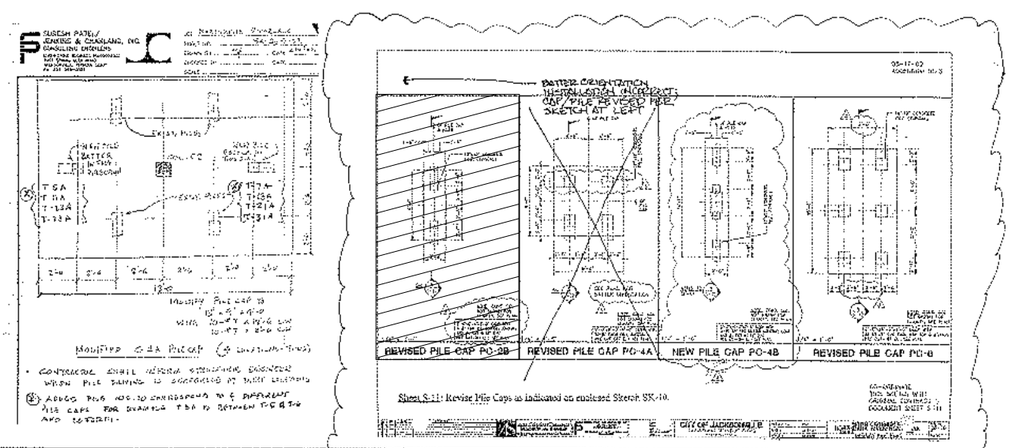


# AS BUILT

INFORMATION PROVIDED BY: 1/12/05

DATE:

NAME: MILLCOW CONSTRUCTION COMPANY

ADDRESS: 6142 LAKE GRAY BLVD.

JACKSONVILLE, FL 32244

PHONE #: (904) 317-9901

I HEREBY CERTIFY THAT THE MATERIALS AND QUANTITIES USED IN THE CONSTRUCTION OF:

___ PAVEMENT
___ CURB & GUTTER
___ STORM & DRAINAGE SYSTEM
___ UNDERDRAIN
___ WATER MAIN
___ SANITARY GRAVITY SYSTEM
___ FORCE MAIN
___ LIFT STATION

ARE IN ACCORDANCE WITH THE APPROVED PLANS AND CITY SPECIFICATIONS, UNLESS OTHERWISE APPROVED BY THE CITY ENGINEER.

AUTHORIZED SIGNATURE: _____ CONTRACTOR

| NO. | BY | DATE | REVISIONS |
|---|---|---|---|
| 1 | | | |
| 2 | | | |
| 3 | | | |
| 4 | | | |
| 5 | | | |

AKEL ☐ LOGAN ☐ SHAFER
ARCHITECTS AND PLANNERS
110 Riverside Avenue / Jacksonville, Florida 32202
Telephone (904) 356-2062 / Fax (904) 355-4200

SURESH PATEL AND ASSOCIATES, INC.
CONSULTING ENGINEERS
CIVIL ENGINEERS BUSINESS NUMBER
2620 SPRING GATE ROAD JACKSONVILLE, FLORIDA 32207
PH: 904-737-3234

DESIGNED: LD/SP
DRAWN BY: TMP/WCG
DATE:
REVIEWED BY: LD/SP
DATE:

CITY OF JACKSONVILLE
DEPARTMENT OF PUBLIC WORKS
ENGINEERING DIVISION

PROJECT NO: 9708
DATE: APR 0 1 2009 08-24-09
SCALE: 3/4" = 1'-0"

WESTERLY EXTENSION OF
NORTHBANK RIVERFRONT PARK
JACKSONVILLE FLORIDA

COLUMN TYPES AND PILE CAP DETAILS

SHEET NO. S-11
DWG NO.

$(getvar, "dwgprefix")$(getvar, "dwgname") – $(getvar, "ctab") $(edtime, 0, Mo/DD/YYYY H:MMam/pm) $(getvar, "loginname")

wsp
5015 S. Florida Avenue, Sulte 301
Lakeland, FL 33813
P+ 1 863-667-2345
wsp.com

ED J. MORALES Jr., P.E.
FLORIDA PE LICENSE NO. 44068

PROJECT:
**MCCOYS CREEK CHANNEL IMPROVEMENTS/ RESTORATION OUTFALL SEGMENT**
JACKSONVILLE, FLORIDA

**CITY OF JACKSONVILLE**
214 NORTH HOGAN ST.
JACKSONVILLE, FL 32202

WSP PROJECT NO:
6735189428.06

MORALES CONSULTING ENGINEERS
3832-010 Baymeadows Rd,
Suite 132
Jacksonville, Florida 32217
office: 904.434-4366
www.morales-ce.com
Certificate of Authortzation No. 30712

| | |
|---|---|
| DESIGNED BY: | EJM Jr. |
| DRAWN BY: | EJM Jr. |
| CHECKED BY: | EJM |
| APPROVED BY: | EJM Jr. |
| DATE: | 12/10/2022 |

SHEET TITLE:
*EXISTING BRIDGE SUBSTRUCTURE DETAILS*

| SHEET NUMBER: | REV. # |
|---|---|
| | |
| SHEET OF 54 SHEETS | |

Docusign Envelope ID: F54DB230-A150-452A-B3F0-14C4A48C193C

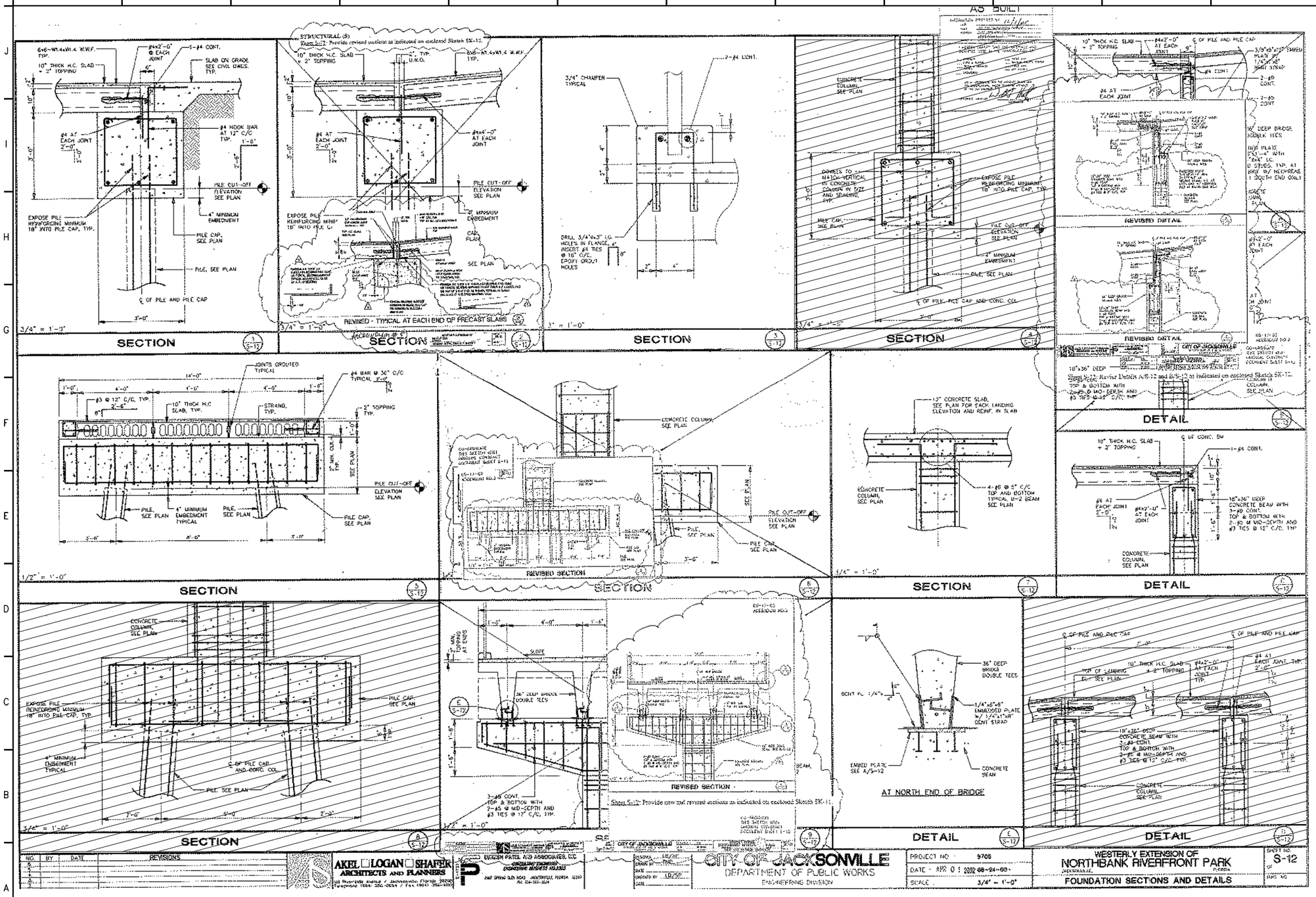


wsp
5015 S. Florida Avenue, Sulte 301
Lakeland, FL 33813
P+ 1 863-667-2345
wsp.com

ED J. MORALES Jr., P.E.
FLORIDA PE LICENSE NO. 44068

PROJECT:
**MCCOYS CREEK CHANNEL IMPROVEMENTS/ RESTORATION OUTFALL SEGMENT**

JACKSONVILLE, FLORIDA

**CITY OF JACKSONVILLE**
214 NORTH HOGAN ST.
JACKSONVILLE, FL 32202

WSP PROJECT NO:
6735189428.06

MORALES CONSULTING ENGINEERS
3832-010 Baymeadows Rd,
Suite 132
Jacksonville, Florida 32217
office: 904.434-4366
www.morales-ce,com
Certificate of Authortzation No. 30712

| | |
|---|---|
| DESIGNED BY: | EJM Jr. |
| DRAWN BY: | EJM Jr. |
| CHECKED BY: | EJM |
| APPROVED BY: | EJM Jr. |
| DATE: | 12/10/2022 |

SHEET TITLE:
*EXISTING BRIDGE SECTION DETAILS*

| SHEET NUMBER: | REV. # |
|---|---|
| | |

SHEET OF 54 SHEETS

$(getvar, "dwgprefix")$(getvar, "dwgname") - $(getvar, "ctab") $(edtime, 0, MM/DD/YYYY H:MMam/pm) $(getvar, "loginname")

Docusign Envelope ID: F54DB230-A150-452A-B3F0-14C4A48C193C

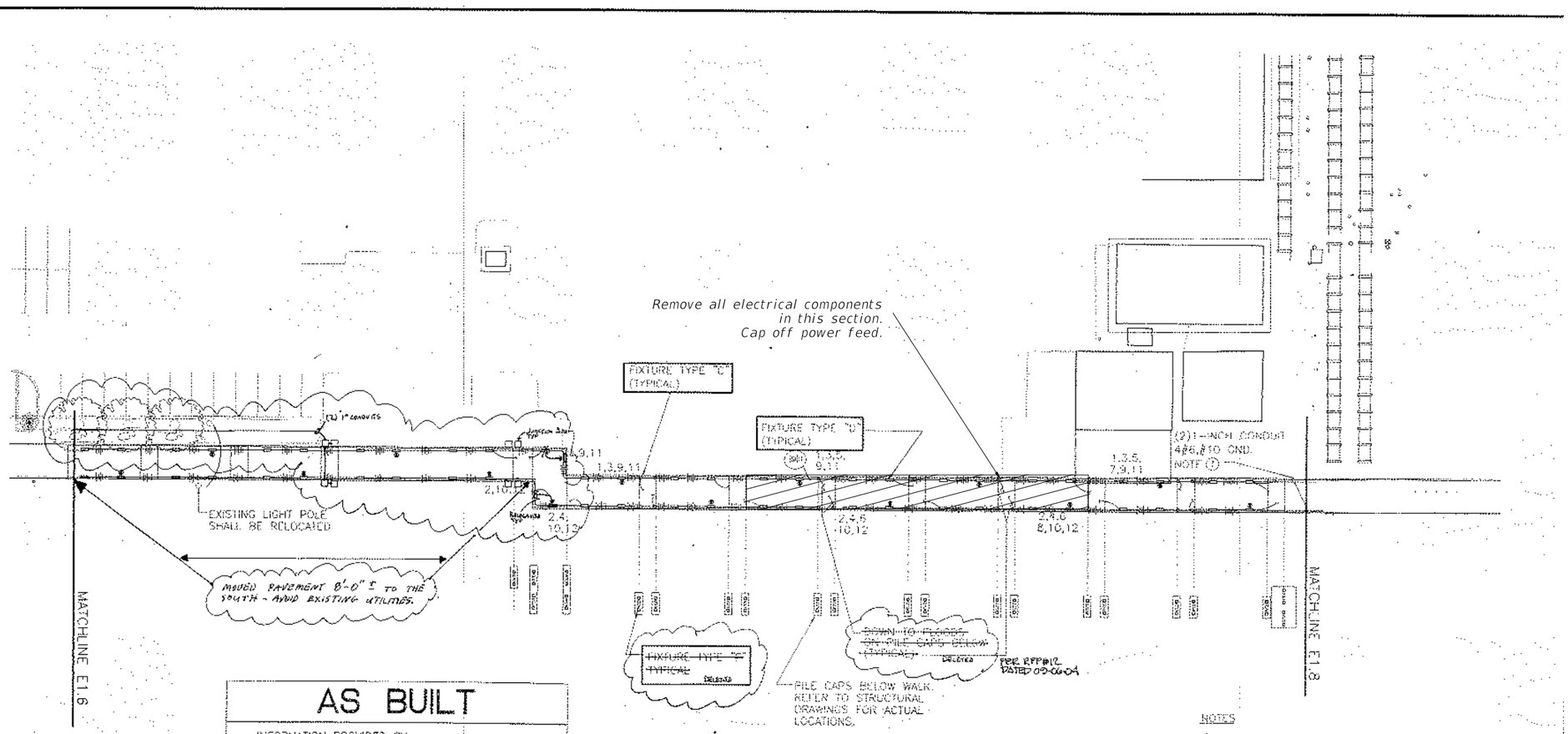


NOTES

1. RUN TWO 1-INCH CONDUITS ON EACH SIDE OF ELEVATED WALK FOR THE FULL LENGTH OF THE ELEVATED WALK. RUN SPARE CIRCUITS THE FULL LENGTH OF THE ELEVATED WALK (R1-11,12)

## AS BUILT

INFORMATION PROVIDED BY:

DATE: 12/1/05

NAME: NILCON CONSTRUCTION COMPANY

ADDRESS: 6142 LAKE GRAY BLVD.
JACKSONVILLE, FL. 32244

PHONE #: (904) 317-5601

I HEREBY CERTIFY THAT THE MATERIALS AND QUANITIES USED IN THE CONSTRUCTION OF:

- ___ PAVEMENT
- ___ CURB & GUTTER
- ___ STORM & DRAINAGE SYSTEM
- ___ UNDERDRAIN
- ___ WATER MAIN
- ___ SANITARY GRAVITY SYSTEM
- ___ FORCE MAIN
- ___ LIFT STATION

ARE IN ACCORDANCE WITH THE APPROVED PLANS AND CITY SPECIFICATIONS, UNLESS OTHERWISE APPROVED BY THE CITY ENGINEER.

AUTHORIZED SIGNATURE _____ CONTRACTOR

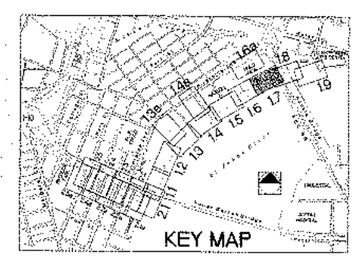


NORTH

ADDITIVE ALTERNATE -17- ENTIRE SHEET

| NO. | BY | DATE | REVISIONS |
|---|---|---|---|

AKEL ☐ LOGAN ☐ SHAFER ARCHITECTS AND PLANNERS

JOHN SEARCY & ASSOCIATES, INC. Consulting Engineers

CITY OF JACKSONVILLE
DEPARTMENT OF PUBLIC WORKS
ENGINEERING DIVISION

PROJECT NO.: 9786
DATE: APR 07 2006
SCALE: 1"=20'

WESTERLY EXTENSION OF NORTHBANK RIVERFRONT PARK
JACKSONVILLE, FLORIDA
MCCOY'S CREEK GARDENS / BRIDGE MUSEUM

SHEET NO. E-17
DWG. NO.

wsp
5015 S. Florida Avenue, Suite 301
Lakeland, FL 33813
P+ 1 863-667-2345
wsp.com

ED J. MORALES Jr., P.E.
FLORIDA PE LICENSE NO. 44068

PROJECT:
**MCCOYS CREEK CHANNEL IMPROVEMENTS/ RESTORATION OUTFALL SEGMENT**
JACKSONVILLE, FLORIDA

**CITY OF JACKSONVILLE**
214 NORTH HOGAN ST.
JACKSONVILLE, FL 32202

WSP PROJECT NO:
6735189428.06

MORALES CONSULTING ENGINEERS
3832-010 Baymeadows Rd,
Suite 132
Jacksonville, Florida 32217
office: 904.434-4366
www.morales-ce,com
Certificate of Authorization No. 30712

| | |
|---|---|
| DESIGNED BY: | EJM Jr. |
| DRAWN BY: | EJM Jr. |
| CHECKED BY: | EJM |
| APPROVED BY: | EJM Jr. |
| DATE: | 12/10/2022 |

SHEET TITLE:
*EXISTING BRIDGE ELECTRICAL DETAILS*

| SHEET NUMBER: | REV. # |
|---|---|
| | |

SHEET OF 54 SHEETS

$(getvar, "dwgprefix")$(getvar, "dwgname") – $(getvar, "ctab") $(edtime, 0, Mo/DD/YYYY H:MMam/pm) $(getvar, "loginname")

Docusign Envelope ID: F54DB230-A150-452A-B3F0-14C4A48C193C

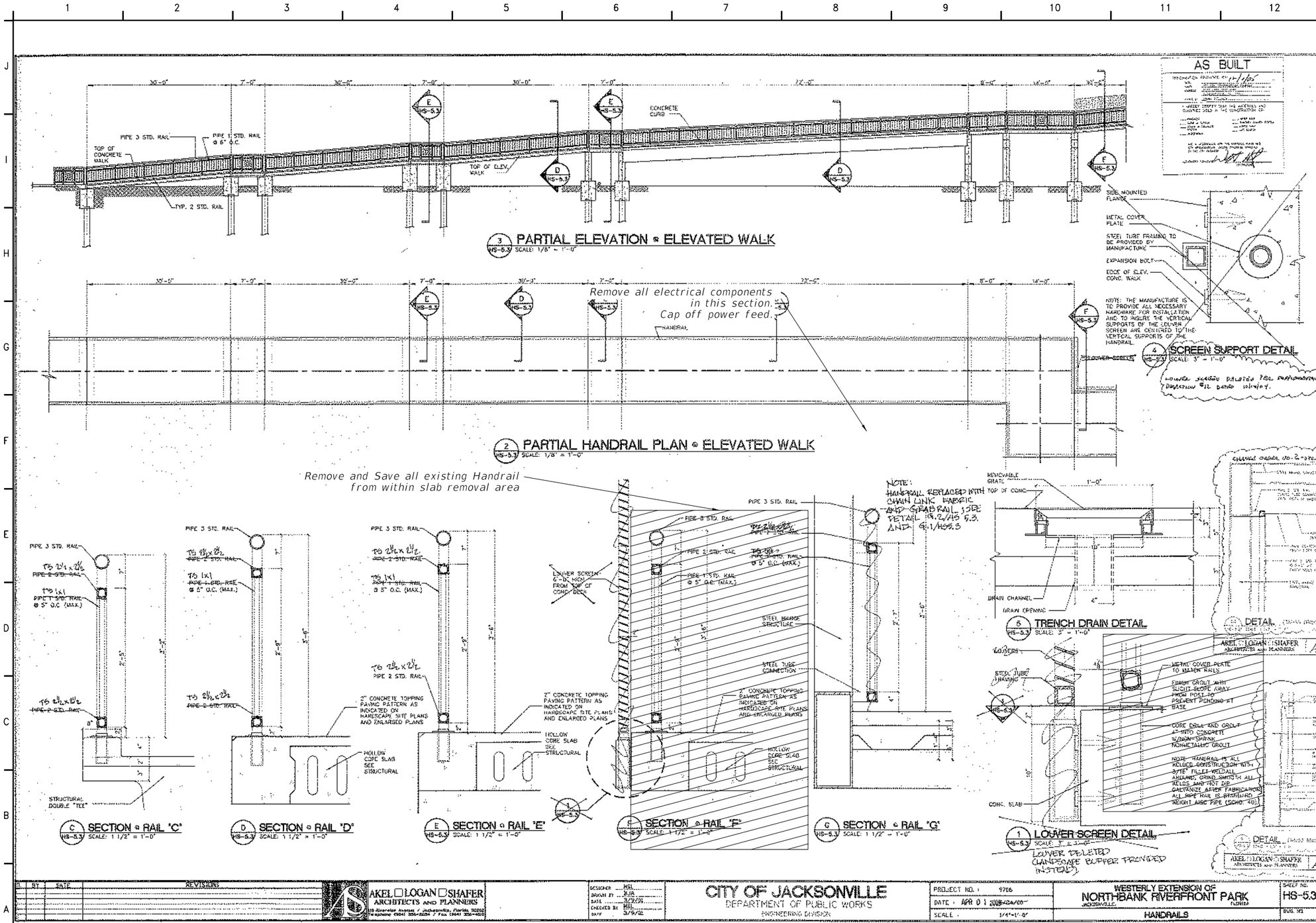


| NO. | BY | DATE | REVISIONS |
|---|---|---|---|
| | | | |

AKEL LOGAN SHAFER ARCHITECTS AND PLANNERS
19 Riverside Avenue / Jacksonville, Florida 32202
Telephone (904) 356-2294 / Fax (904) 356-4615

DESIGNER: MBL
DRAWN BY: JJA
DATE: 3/9/06
CHECKED BY: MBL
DATE: 3/9/06

CITY OF JACKSONVILLE
DEPARTMENT OF PUBLIC WORKS
ENGINEERING DIVISION

PROJECT NO.: 9766
DATE: APR 0 1 2008-4SA/CO
SCALE: 1/4"=1'-0"

WESTERLY EXTENSION OF NORTHBANK RIVERFRONT PARK
JACKSONVILLE, FLORIDA
HANDRAILS

SHEET NO. HS-5.3
DWG. NO.

$(getvar, "dwgprefix")$(getvar, "dwgname") - $(getvar, "ctab") $(edtime, 0, Mo/DD/YYYY H:MMam/pm) $(getvar, "loginname")

wsp
5015 S. Florida Avenue, Sulte 301
Lakeland, FL 33813
P+ 1 863-667-2345
wsp.com

ED J. MORALES Jr., P.E.
FLORIDA PE LICENSE NO. 44068

PROJECT:
**MCCOYS CREEK CHANNEL IMPROVEMENTS/ RESTORATION OUTFALL SEGMENT**
JACKSONVILLE, FLORIDA

**CITY OF JACKSONVILLE**
214 NORTH HOGAN ST.
JACKSONVILLE, FL 32202

WSP PROJECT NO:
6735189428.06

MORALES CONSULTING ENGINEERS
3832-010 Baymeadows Rd,
Suite 132
Jacksonville, Florida 32217
office: 904.434-4366
www.morales-ce.com
Certificate of Authorization No. 30712

| | |
|---|---|
| DESIGNED BY: | EJM Jr. |
| DRAWN BY: | EJM Jr. |
| CHECKED BY: | EJM |
| APPROVED BY: | EJM Jr. |
| DATE: | 12/10/2022 |

SHEET TITLE:
*EXISTING BRIDGE HAND RAIL DETAILS*

| SHEET NUMBER: | REV. # |
|---|---|
| | |

SHEET OF 54 SHEETS

Docusign Envelope ID: F54DB230-A150-452A-B3F0-14C4A48C193C

# CHANGE ORDER REQUEST #29

# ELIMINATION OF MUCK LAYER IN SECTION 1

# MCCOY'S CREEK OUTFALL REALIGNMENT

# COJ CONTRACT NO.: 70646-23

# OCTOBER 30, 2025

Docusign Envelope ID: F54DB230-A150-452A-B3F0-14C4A48C193C

# GAI ENTITLEMENT ANALYSIS

# CHANGE ORDER REQUEST #29

# ELIMINATION OF MUCK LAYER IN SECTION 1

# MCCOY'S CREEK OUTFALL REALIGNMENT

# OCTOBER 30, 2025

Docusign Envelope ID: F54DB230-A150-452A-B3F0-14C4A48C193C

# Entitlement Analysis COR #29 – Elimination of Sand/Muck Layer Over Slab in Section 1 of New Channel (Deduct)

Job Description: McCoy's Creek Outfall Realignment
COJ Contract Number: 70646-23
October 30, 2025

Entitlement Analysis

The City directed the elimination of the requirement to place 1 foot of sand/muck coverage over the concrete slab within Section 1. This activity was originally included in JBCCI's contract scope and priced as a lump sum item in the Schedule of Values. With the removal of this work, JBCCI is entitled to issue a deductive credit to the City reflecting the value of the eliminated scope. The original unit price for this activity was 1 LS = $40,925.00, resulting in a total credit of ($40,925.00).

Impact Analysis

The removal of this scope reduces the labor, equipment, and material efforts originally planned for the placement of the sand and muck overlay. No additional costs or project delays are associated with this change, as the activity is being fully eliminated. The impact to the contract is therefore a deductive adjustment in the amount of ($40,925.00), consistent with the Schedule of Values.

Conclusion

The directive to eliminate the 1 foot of sand/muck coverage over the concrete slab in Section 1 removes a clearly defined portion of JBCCI's original contractual responsibilities. As a result, JBCCI is issuing a deductive credit equal to the contract value of the eliminated work.

Docusign Envelope ID: F54DB230-A150-452A-B3F0-14C4A48C193C

# CONTRACTOR'S DOCUMENTATION

# CHANGE ORDER REQUEST #29

# ELIMINATION OFMUCK LAYER IN SECTION 1

# MCCOY'S CREEK OUTFALL REALIGNMENT

# OCTOBER 30, 2025

Docusign Envelope ID: F54DB230-A150-452A-B3F0-14C4A48C193C

**J.B. Coxwell Contracting, Inc.**
6741 Lloyd Road West
Jacksonville, Florida 32254
Office (904) 786-1120 Fax (904) 783-2970

October 24, 2025

McCoy's Creek Channel Improvements

Elimination of Sand Muck coverage over Slab in Channel Bottom

Carl Padgett
GAI Consultants
12574 Flagler Center Blvd
Suite 202
Jacksonville, FL 32258

Project Name: McCoy's Creek Channel Improvements
County: Duval
COJ Contract #: 70646-23
Re: RFCO# 29 Elimination of Sand Muck coverage
over Slab in Channel Bottom

Dear Mr. Padgett:

As you are aware, the decision was made to eliminate the need for the 1' of sand & muck coverage over the concrete slab within Section 1. By eliminating this scope of work, JBCCI will issue credit in the amount of ($40,925.00) per the schedule of values.

Original Unit Price 1 LS = $40,925.00

If you have any questions, please do not hesitate to contact me.

Respectfully,

**J. B. COXWELL CONTRACTING, INC.**

Garrett Harrison
Director of Structures


An Equal Opportunity Employer

Docusign Envelope ID: F54DB230-A150-452A-B3F0-14C4A48C193C

# City of Jacksonville, Florida

*Procurement Award Form (PAF)*

**Part 1 – Form Type:** JPAC Award Request: Renewals, Extensions, and Unit Price Increases

Goods and/or Services: McCoy's Creek Outfall Improvements

**Requested Action and Justification:**

Recommend approval of Change Order #7 to increase the award with J.B. Coxwell Contracting in the amount of $515,450.35 for unforeseen conditions. The new total not to exceed amount will be $39,455,319.52.

To be executed via formal change order through the Office of General Counsel.

| | | | | | |
|---|---|---|---|---|---|
| **Supplier:** | J.B. Coxwell Contracting Inc | **Basis of Award:** | LPTA | **BID Opening Date:** | 07/28/2023 |

| | | | | | |
|---|---|---|---|---|---|
| **POA #:** | 70646-23 | **PO #:** | 663107-23 | **Change Order #:** | 7 |
| **Solicitation #:** | CB CP-0098- 23 | **Contract #:** | 70646-23 | **Contract ADM #:** | N/A |
| **Term:** | Project Completion | **Options:** | N/A | **Options Used:** | N/A |

| | | | |
|---|---|---|---|
| **Federally Funded:** | No | **JSEB Rec:** | Participation |
| **Licenses Verified:** | Yes | **JSEB %:** | 20 |
| **Bonds Required:** | No | **Bonds Waived Pursuant To:** | N/A |

| | | | | | | | | | | | |
|---|---|---|---|---|---|---|---|---|---|---|---|
| **Fund:** | 32124 | **Center:** | 153101 | **Acct:** | 565051 | **Proj:** | 008972 | **Activity:** | 0000000000 | $ | 515,540.35 |
| **Fund:** | | **Center:** | | **Acct:** | | **Proj:** | | **Activity:** | | $ | |
| **Fund:** | | **Center:** | | **Acct:** | | **Proj:** | | **Activity:** | | $ | |

| | | | | | |
|---|---|---|---|---|---|
| **New NTE/GMP:** | $ 39,455,319.52 | **Contingent Amt:** | $ 0.00 | **DMP/ODPO Amt:** | $ 0.00 |

| | | | |
|---|---|---|---|
| **Using Agency/BU:** | PWEN:ENGINEERING AND CONSTRUCTION MANAGEMENT | | |
| **Concurrence:** | Signed by: Scott Carter, P.E. 20991F9ADFC947E... | **Title:** | CHIEF OF ENGINEERING CONSTRUCTION MANAGEMENT 11/3/2025 |
| **Concurrence:** | 1EFA223D5D23487... | **Title:** | DIRECTOR OF PUBLIC WORKS 12/15/2025 |
| **Concurrence:** | | **Title:** | |
| **Concurrence:** | | **Title:** | |

Initial MT Initial DT

| | | | |
|---|---|---|---|
| **Procurement Analyst/Buyer:** | Signed by: Kemp, Benjamin 4CB86DFACE249C... | **Chief of Procurement:** | Signed by: B19F1D5172B2458... 1/6/2026 |
| **Name:** | Kemp, Benjamin | **Name:** | Dustin L. Freeman |

| **Part 2 – JPAC Action:** All award actions subject to lawfully appropriated funds. | | **Part 3 – Final Awarding Authority Action:** | |
|---|---|---|---|
| **Members who approve:** | 3 | **Action:** | Approved |
| **Members who disapprove:** | 0 | **Signature:** | Signed by: kelli O'Leary 92A2898FE95E4AC... |
| **Date:** | 1/9/2026 | **Date:** | 1/9/2026 |

Signed by:

Docusign Envelope ID: F54DB230-A150-452A-B3F0-14C4A48C193C

# PAF Instructions
## Part 1 (using agency)

**Form Type:** This form will be used for both Administrative Awards and JPAC Requests. Select type from dropdown options.

**Goods and/or Services:** Enter a brief description of the types of goods and services included in the request.

**Requested Action and Justification:** Enter a brief description of the requested action or authority being sought. i.e.; *Request permission to award the lowest, responsive responsible bidder for an ITB or award the highest ranked supplier for an RFP.* This block should also be used for additional information such as additional 4th account strings, or other information essential for contract execution.

**Supplier:** Enter awarded supplier name**.** If multiple, include in "Requested Action and Justification" box.

**Basis of Award:** Select from Lowest Price Technical Acceptable (LPTA), Highest Price Technical Acceptable (HPTA) or N/A.

**Bid Opening Date:** The date bids were unsealed by Procurement.

**POA #:** This is your 1Cloud generated Agreement number. Select Type, Enter Number.

**PO #:** Enter the PO number or agreement release number.

**Change Order #:** Provide the applicable change order number represented by this request.

**Solicitation #:** Select Prefix type, Enter Number, and Year.

**Contract #:** This number should be the same as your POA number (unless procured prior to 2020)

**Contract Amendment #:** Provide the applicable amendment number represented by this request.

**Term:** Select the Period of Performance or Term for the initial period.

**Options:** Period of time for each renewal or option.

**Options Used:** Prior to this request, enter how many options were already used.

**Federally Funded:** Select yes or no from dropdown if Federal Funds will be used.

**JSEB Rec:** Select Encouragement or JSEB Set Aside Option.

**JESB %:** If JSEB Participation, enter the percentage.

**Bonds Waived Pursuant to:** Select option from Drop down.

**Funding Sources:** Fund/Center/Account/Project/Activity, all fields are required even if zeros.

**New NTE/GMP:** Enter the new total not to exceed amount. Note, this should match the contract maximum indebtedness, if applicable**.**

**Contingent Amount:** If your agency requests an allowance for unforeseen additional expenses, then specify the amount of your requested increase and new NTE that represents the contingency allowance. This is over and above any quote.

**DMP/ODPO Account:** Enter the Direct Materials Purchase/Owner Direct Purchase Order Account. Used mainly for CIP (Capital Improvement/Construction) Projects

**Using Agency/BU:** Select one from the dropdown list.

**Concurrence:** Using Agency internal routing requirements for Electronic Signatures (follow Proc Manual for threshold requirements)

**Title:** Title of person electronically signing form.

**Attachments:** Included any supplemental information to the Procurement Award Form. i.e.; *Scope of work, previous awards*.

**Any field where there is no data available, or no entry is required, either leave it blank or enter N/A. Any fields where there is known data, include for informational purposes. Any changes to an original award should contain the data that is being changed and any other relevant data required for JPAC review and approval.*

Docusign Envelope ID: F54DB230-A150-452A-B3F0-14C4A48C193C

CITY OF JACKSONVILLE
DEPARTMENT OF PUBLIC WORKS
ENGINEERING DIVISION
CONSTRUCTION CHANGE ORDER

Change Order No. (7) Date 10/31/2025

Description of Project McCoy's Creek Outfall Imrovements

Name of Contractor J.B. Coxwell Contracting, Inc.

Contractor's Address 6741 Lloyd Road West, Jacksonville, FL 32254

Contract No. 70646-23/ PO 663107-23

Account No. See attached Original Contract $35,035,820.00

+ Previous Change Order 1-6 $3,904,049.17 + Change Order No. 7 $515,450.35

*See attached appendix for additional listings.

TOTAL REVISED CONTRACT $39,455,319.52

Bid Number CP-0098-23

Construction Completion Date June 26, 2025
Revised Construction Completion Date August 18, 2025
Contract Expiration Date October 24, 2025
Revised Contract Expiration Date Project completion

In compliance with General Conditions of above-referenced contract, CONTRACTOR and OWNER do both hereby agree that the CONTRACTOR shall make the following changes, additions or deletions to the Work specified in the plans and specifications: See attached.

Justification: See attached.

By execution of this document, the Contractor acknowledges that all issues related to Contract Time and Compensation are resolved.

The Issuing Authority has looked over cost and pricing data for this change order and has determined that this change order is necessary and all costs are reasonable.

Accepted for Contractor J.B. Coxwell Contracting, Inc.

Signed _____ Attest _____

Title _____ Title _____

Date _____ Date _____

Signed Construction Management By _____
Issuing Authority — Thomas G. McKnight, Capital Improvement Construction Manager — Date

Signed Right-of-Way and Stormwater Maint. By _____
Using Division — Div/Department Head — Date

Chief, Engineering & Construction Mgmt Div Date — Assistant Counsel Date

Director of Public Works Date — Mayor Date

Chief of Procurement Date — Corporation Secretary Date

Director of Finance Date

Docusign Envelope ID: F54DB230-A150-452A-B3F0-14C4A48C193C



| NBR | MASTER ITEM DESCRIPTION | QUANTITY | UOM | UNIT COST | NET ADDITION | NET DELETION | TOTAL |
|---|---|---|---|---|---|---|---|
| | **ADDITIONAL SCOPE ( PROJECT INGRESS & EGRESS INACCESSIBLE )** | | | | | | |
| 21 | Installation/Removal of Trestle Bridge | 1 | LS | $114,662.81 | $114,662.81 | | |
| | JUSTIFICATION: Due to the proposed ingress & egress becoming inaccessible through the adjacent developer site, the project access became limited, requiring a trestle bridge to be installed to continue construction on the northern part of the project, Section 4, & completing May Street, to provide right of entry to developer site. Pages 2 thru 75. | | | | | | |
| | **ADDITIONAL SCOPE (PLAN REVISION)** | | | | | | |
| 22 | May St. Additional Drainage Pipe, Structures, and Excavatable Flowable Fill | 1 | LS | $85,763.08 | $85,763.08 | | |
| | JUSTIFICATION: During construction the contractor informed the Engineer of Record (EOR) of observing excessive drainage in the proposed May Street area. Following the EOR assessment of the drainage, the EOR determined May St required additional drainage components to contain the runoff and revised the roadway plans accordingly. Pages 76 thru 119 | | | | | | |
| | **ADDITIONAL SCOPE (PLAN REVISION)** | | | | | | |
| 23 | Redesigned Section 4 Tie-Back System | 1 | LS | $315,024.46 | $315,024.46 | | |
| | JUSTIFICATION: The sequence of construction and the contractor's means & methods were impacted due to the proposed ingress & egress becoming inaccessible through the adjacent developer site. With the intent of maintaining the project completion date, the EOR revised the plans to facilitate the sequence of work and the contractor's means & methods.. Pages 120 thru 154 | | | | | | |
| | **TOTAL ADDITIONAL SCOPE ITEMS** | | | | $515,450.35 | | |
| | **TOTAL CHANGE ORDER #7** | | | | $515,450.35 | $0.00 | |
| | | | | | | | **$515,450.35** |

Reviewed & Approved
COJ Project Manager
10/30/2025

Docusign Envelope ID: F54DB230-A150-452A-B3F0-14C4A48C193C

# CHANGE ORDER REQUEST #21

# TRESTLE LABOR

# MCCOY'S CREEK OUTFALL REALIGNMENT

# APRIL 16, 2025

Docusign Envelope ID: F54DB230-A150-452A-B3F0-14C4A48C193C

# GAI ENTITLEMENT ANALYSIS

# CHANGE ORDER REQUEST #21

# TRESTLE LABOR

# MCCOY'S CREEK OUTFALL REALIGNMENT

# APRIL 16, 2025

Docusign Envelope ID: F54DB230-A150-452A-B3F0-14C4A48C193C



**CHANGE ORDER REQUEST #21: Engineer's Entitlement Analysis for Installation/Removal of Trestle Bridge**
Job Description: McCoy's Creek Outfall Realignment
COJ Contract Number: 70646-23
April 16, 2025

**Summary**

JB Coxwell Construction Company, Inc. (JB Coxwell - "Contractor") was the successful Contractor selected to construct the above-mentioned project. With changes made to the original ingress and egress of the project, the entrance to the project was changed to the JTA parking lot on the westside of Riverside Ave. To allow the project to remain on schedule, construction of a trestle bridge was needed to construct Section 4, along with the future construction of May St. which was completed by JBCCI before the hard date of March 31st. This allowed the critical path items to proceed and keep the project on schedule.

There **ARE** impacts to the critical path for this item. The Contractor is asking for $114,662.81 for labor and equipment that was needed to install and remove the Trestle bridge. The requested costs are summarized below.

| | Cost | Markup | Total |
|---|---|---|---|
| Labor & Burden | $ 19,290.53 | $ 2,893.58 | $ 22,184.11 |
| Equipment | $ 79,890.60 | $ 11,983.59 | $ 91,874.19 |
| Bond (0.53%) | $ 604.51 | N/A | $ 604.51 |
| | | **TOTAL**** | **$ 114,662.81** |

Entitlement has been found for the Contractor concerning money for the installation and removal of the Trestle Bridge. The Contractor is requesting $114,662.81, consideration for this amount is due to the deviation of sequencing of construction activities and construction access.

**Description:**
Installation and removal of the trestle bridge to allow access for construction of Section 4, as well as May Street after changes to the original ingress and egress of the project.

**Entitlement Analysis:**
Compensation is in accordance with Division 3 COJ General Conditions Section 20.34.

**COJ Participation:** $ 114,662.81.

**Engineer's Estimate: Time Analysis and Justification:**
Ten (10) days are requested by the Contractor.

**Engineer's Estimate: Overall Cost:**
The cost of the extra work was based upon the labor, equipment, and applicable mark-ups outlined in the Division 3 COJ General Conditions Section 20.34.2.2. The contractor's price of $ 114,662.81 compared favorably with GAI's Engineer's Estimate of $ 114,662.81.

Docusign Envelope ID: F54DB230-A150-452A-B3F0-14C4A48C193C



The Delta is 0.00 or 0.00%.

**Premium Cost Analysis:**

No premium cost associated with this issue. Costs are based on labor and equipment.

Revised Plan Sheet Nos.- **N/A**
Design Error or Omission: - **NO**

Docusign Envelope ID: F54DB230-A150-452A-B3F0-14C4A48C193C

# GAI ENGINEER'S ESTIMATE

# CHANGE ORDER REQUEST #21

# TRESTLE LABOR

# MCCOY'S CREEK OUTFALL REALIGNMENT

# APRIL 16, 2025

**ENGINEER'S ESTIMATE OF EXTRA WORK**
**PROJECT**: MCOY'S CREEK OUTFALL REALIGNMENT
**COJ CONTRACT NO.:** 70646-23
**CHANGE ORDER NO.: 21**
**ISSUE:** Installation/Removal of Trestle
**DATE**: April 15, 2025

gai consultants
transforming ideas into reality

**LABOR**

| JB COXWELL | | | | | | | |
|---|---|---|---|---|---|---|---|
| **POSITION** | **QTY.** | **UNIT** | **RATE** | **BURDENED RATE** | **EXTENDED COST** | **AMOUNT** | **COMMENT** |
| Crane Operator-Spaeth | 94 | Hours | $ 46.00 | | | $ 4,324.00 | Regular Time |
| Pile Driving Foreman-Bazile | 94 | Hours | $ 27.00 | | | $ 2,538.00 | Regular Time |
| Pile Driver/Welder-McNabb | 94 | Hours | $ 22.00 | | | $ 2,068.00 | Regular Time |
| Pile Driver/Welder-White | 94 | Hours | $ 23.00 | | | $ 2,162.00 | Regular Time |
| Pile Driver/Welder-Jean | 94 | Hours | $ 24.00 | | | $ 2,256.00 | Regular Time |
| | | | | | | $ 13,348.00 | |
| | | | | 44.52% | | $ 5,942.53 | |
| | | | Mark-Up | 15.00% | | $ 2,893.58 | |
| **LABOR TOTAL** | | | | | | **$ 22,184.11** | |

**EQUIPMENT**

| JB COXWELL | QTY. | UNIT | RATE | BURDENED RATE | EXTENDED COST | AMOUNT | COMMENT |
|---|---|---|---|---|---|---|---|
| Manitowoc Crawler Crane | 94 | HRS. | $ 585.22 | | | $ 55,010.68 | |
| F-150 - Super pick up | 94 | HRS. | $ 45.36 | | | $ 4,263.84 | |
| PVE VM Vibratory Hammer | 94 | HRS. | $ 207.89 | | | $ 19,541.66 | |
| Lincoln 500 Welding Machine | 94 | HRS. | $ 11.43 | | | $ 1,074.42 | |
| | | | Mark-Up | 15.00% | | $ 11,983.59 | |
| | | | | | | **$ 91,874.19** | |

**MATERIALS**

| JB COXWELL | PAY ITEM NUMBER | UNIT | | QUANTITY | UNIT PRICE | AMOUNT | COMMENT |
|---|---|---|---|---|---|---|---|
| | | | Sales Tax | 7.50% | | $ - | |
| | | | Mark-Up | 15.00% | | $ - | |
| **MATERIALS TOTAL** | | | | | | **$0.00** | |

**SUBCONTRACTORS**

| JB COXWELL | PAY ITEM NUMBER | UNIT | | QUANTITY | UNIT PRICE | AMOUNT | COMMENT: |
|---|---|---|---|---|---|---|---|
| | | | Mark-Up | 10.00% | | $0.00 | |
| | | | | | | $0.00 | |
| **TOTAL** | | | | | | **$0.00** | |
| **SUBTOTAL** | | | | | | **$ 114,058.30** | |
| **SUBTOTAL COST ESTIMATE** | | | | | | ***$ 114,058.30*** | |
| **BOND** | | | 0.53% | | | ***$ 604.51*** | |
| **TOTAL COST ESTIMATE** | | | | | | ***$114,662.81*** | |
| Prepared By: | | | | | | | |
| J.Carlton Padgett Jr. E.I., CGC | 4/15/2025 | | | | | | |
| Project Administrator | Date | | | | | | |
| GAI Consultants Inc. | | | | | | | |
| **JB Coxwell Price Quote** | | | | | | **$114,662.81** | |
| **GAI Engineer's Estimate** | | | | | | **$114,662.81** | |
| **DELTA** | | | | | | **$ 0.00** | **0%** |



Docusign Envelope ID: F54DB230-A150-452A-B3F0-14C4A48C193C

Docusign Envelope ID: F54DB230-A150-452A-B3F0-14C4A48C193C

# GAI DAILIES

# CHANGE ORDER REQUEST #21

# TRESTLE LABOR

# MCCOY'S CREEK OUTFALL REALIGNMENT

# APRIL 16, 2025

Docusign Envelope ID: F54DB230-A150-452A-B3F0-14C4A48C193C

**CITY OF JACKSONVILLE**
**CONTRACTOR'S DAILY REPORT**

| Date: | FDOT/COJ Contract ID: | Financial Project ID: | Inspector: |
|---|---|---|---|
| 10/31/2024 | 70646-23 | 6735189428 | Brad Clayton |

| HIGH Temp: 81 | AM Conditions: | PM Conditions |
|---|---|---|
| LOW Temp: 70 | Clear | Clear |

| Remarks |
|---|
| General: |
| JBC: 6:30-5:30, |
| |
| 1) Contractor continued dewatering |
| 2) Contractor moved material around site |
| 3) Excavated soil in Section 1 is being used on-site for backfill for sheet pile anchors in Section 2/3 |
| 4) Cap pour, lower r wall, sec2 sta 104+60-105 |
| 5) 47 Truck loads of material were removed from section 2/3 overflow cont (515.49T) |
| 6) Section 1, R wall cap tied rebar cont |
| 7) Trussle Bridge support pile driven into section 4 |
| 8) L upper wall, sec 2, Sta 106, wall form set into place |
| 9) |
| |
| |
| |

| Accidents: | See accident report dated: | Day of week | Contract day | Total days |
|---|---|---|---|---|
| X No ☐ Yes | | Thursday | 312 | 566 |

Visitors:

**Contractor(s) and Personnel**

| # | Name | Type | # | Hrs | Type | # | Hrs | Type | # | Hrs |
|---|---|---|---|---|---|---|---|---|---|---|
| 1 | **J.B.Coxwell** | Supt | 2 | 10 | Foreman | 3 | 10 | Skilled | 20 | 10 |
| | | Semi Skilled | | | Common | | | Trainee | | |
| 2 | | Supt | | 10 | Foreman | | 10 | Skilled | | 10 |
| | | Semi Skilled | | | Common | | | Trainee | | |
| 3 | | Supt | | | Foreman | | | Skilled | | |
| | | Semi Skilled | | | Common | | | Trainee | | |
| 4 | | Supt | | | Foreman | | | Skilled | | |
| | | Semi Skilled | | | Common | | | Trainee | | |

**Contractor(s) Equipment (Active or Idle)**

| Contr/ | Equipment ID | Description | # | # | Total Hours Used |
|---|---|---|---|---|---|
| 1 | | Work trucks | 2 | 2 | 10 |

| | | | | | |
|---|---|---|---|---|---|
| 1 | | Trailor | 1 | 1 | 10 |
| 1 | | Mini excavator | 1 | 1 | 10 |
| 1 | | Lull | 1 | 1 | 10 |
| 1 | | Dozer | 1 | 1 | 10 |
| 1 | | Frontloader | 1 | 1 | 10 |
| 1 | | Excavator | 2 | 2 | 10 |
| 1 | | Water truck | 2 | 2 | 10 |
| 1 | | Crawler Crane | 2 | 1 | 10 |
| 1 | | Vibratory hammer | 1 | 1 | 10 |

| **Date:** | **Contract ID:** |
|---|---|
| 10/31/2024 | 71178-21 |

**CITY OF JACKSONVILLE**
**CONTRACTOR'S DAILY REPORT**

| **Estimated Work Performed** | | | | | | | |
|---|---|---|---|---|---|---|---|
| Contr/ Sub # | Line Item # | Pay Item Code | Location | Time (AM/PM) | | Installed | |
| | | | | Begin | End | Qty | Units |
| | | | | | | | |
| | | | | | | | |
| | | | | | | | |
| | | | | | | | |
| | | | | | | | |
| | | | | | | | |
| | | | | | | | |
| | | | | | | | |

EFFECTS OF WEATHER ON MAJOR WORK ITEMS (CHECK CONTROLLING ITEMS):

| Major and/or Controlling Work Items | No Effect All | Affected Less Than | Affected More Than 50% | No Work All Day |
|---|---|---|---|---|
| | ☐ | ☐ | ☐ | ☐ |
| | ☐ | ☐ | ☐ | ☐ |
| | ☐ | ☐ | ☐ | ☐ |
| | ☐ | ☐ | ☐ | ☐ |
| | ☐ | ☐ | ☐ | ☐ |
| | ☐ | ☐ | ☐ | ☐ |

## CONTRACTOR PAST PERFORMANCE

| | |
|---|---|
| PURSUIT OF THE WORK: | [X] Yes [ ] No |
| CONFORMANCE WITH CONTRACT DOCUMENTS: | [X] Yes [ ] No |

| TECHNICIANS SIGNATURE AND RATING: | HOURS AT JOB SITE | | TOTAL HOURS |
|---|---|---|---|
| | FROM: 6:30 AM | TO: 5:30 PM | 10.5 |
| ENGINEER IN CHARGE (NAME, RANK AND INITIALS): | | | |
| | DATE: | | |
| | | | |

**CITY OF JACKSONVILLE**
**CONTRACTOR'S DAILY REPORT**

Attachment Page

| Date | FDOT/COJ Contract ID: | Financial Project ID: | Inspector: |
|---|---|---|---|
| 10/31/2024 | 71178-21 | 6735189428 | Brad Clayton |

| Remarks | | | | |
|---|---|---|---|---|
| General: | | | | |
| | | | | |
| | | | | |
| | | | | |
| | | | | |
| | | | | |
| | | | | |
| | | | | |
| | | | | |
| Accidents: | See accident report dated: | Day of week | Contract day | Total days |
| x No ☐ Yes | | Thursday | 312 | 566 |
| Visitors: | | | | |

**Contractor(s) Equipment (Active or Idle)**

| Contr/ Sub # | Equipment ID | Description | # Pieces | # Used | Total Hours Used |
|---|---|---|---|---|---|
| 1 | | Street sweeper | 1 | 1 | 10 |
| 1 | | Pump | 2 | 2 | 10 |
| 1 | | Mobile Crane | 1 | 1 | 10 |
| 2 | | Excavator (mini) | 1 | 1 | 10 |
| 2 | | loader | 1 | 1 | 10 |
| 2 | | Work Truck | 2 | 1 | 10 |
| 2 | | hydraulic rotary drilling rig | 1 | 1 | 10 |
| | | | | | |
| | | | | | |
| | | | | | |
| | | | | | |
| | | | | | |
| | | | | | |
| | | | | | |
| | | | | | |
| | | | | | |
| | | | | | |
| | | | | | |

Docusign Envelope ID: F54DB230-A150-452A-B3F0-14C4A48C193C

**CITY OF JACKSONVILLE**
**CONTRACTOR'S DAILY REPORT**

| Date: | FDOT/COJ Contract ID: | Financial Project ID: | Inspector: |
|---|---|---|---|
| 11/1/2024 | 70646-23 | 6735189428 | Brad Clayton |

| HIGH Temp: 83 | AM Conditions: | PM Conditions |
|---|---|---|
| LOW Temp: 68 | Clear | Clear |

| Remarks |
|---|
| General: |
| JBC: 6:30-3:30, |
| |
| 1) Contractor continued dewatering |
| 2) Contractor moved material around site |
| 3) Excavated soil in Section 1 is being used on-site for backfill for sheet pile anchors in Section 2/3 |
| 4) removed form on cap pour, lower r wall sec 1 |
| 5) 34 Truck loads of material were removed from section 2/3 overflow cont (487T) |
| 6) Section 1, R wall cap tied rebar cont |
| 7) Trussle Bridge support pile driven into section 4 cont |
| 8) L upper wall, sec 2, Sta 106, wall form set into place |
| 9) |
| |
| |
| |

| Accidents: | See accident report dated: | Day of week | Contract day | Total days |
|---|---|---|---|---|
| X No ☐ Yes | | Friday | 313 | 566 |

Visitors:

**Contractor(s) and Personnel**

| # | Name | Type | # | Hrs | Type | # | Hrs | Type | # | Hrs |
|---|---|---|---|---|---|---|---|---|---|---|
| 1 | **J.B.Coxwell** | Supt | 2 | 8 | Foreman | 3 | 8 | Skilled | 20 | 8 |
| | | Semi Skilled | | | Common | | | Trainee | | |
| 2 | | Supt | | | Foreman | | | Skilled | | |
| | | Semi Skilled | | | Common | | | Trainee | | |
| 3 | | Supt | | | Foreman | | | Skilled | | |
| | | Semi Skilled | | | Common | | | Trainee | | |
| 4 | | Supt | | | Foreman | | | Skilled | | |
| | | Semi Skilled | | | Common | | | Trainee | | |

**Contractor(s) Equipment (Active or Idle)**

| Contr/ | Equipment ID | Description | # | # | Total Hours Used |
|---|---|---|---|---|---|
| 1 | | Work trucks | 2 | 2 | 8 |

| | | | | | |
|---|---|---|---|---|---|
| 1 | | Trailor | 1 | 1 | 8 |
| 1 | | Mini excavator | 1 | 1 | 8 |
| 1 | | Lull | 1 | 1 | 8 |
| 1 | | Dozer | 1 | 1 | 8 |
| 1 | | Frontloader | 1 | 1 | 8 |
| 1 | | Excavator | 2 | 2 | 8 |
| 1 | | Water truck | 2 | 2 | 8 |
| 1 | | Crawler Crane | 2 | 1 | 8 |
| 1 | | Vibratory hammer | 1 | 1 | 8 |

| **Date:** | **Contract ID:** |
|---|---|
| 11/1/2024 | 71178-21 |

**CITY OF JACKSONVILLE**
**CONTRACTOR'S DAILY REPORT**

| **Estimated Work Performed** | | | | | | | |
|---|---|---|---|---|---|---|---|
| Contr/ Sub # | Line Item # | Pay Item Code | Location | Time (AM/PM) | | Installed | |
| | | | | Begin | End | Qty | Units |
| | | | | | | | |
| | | | | | | | |
| | | | | | | | |
| | | | | | | | |
| | | | | | | | |
| | | | | | | | |
| | | | | | | | |
| | | | | | | | |

EFFECTS OF WEATHER ON MAJOR WORK ITEMS (CHECK CONTROLLING ITEMS):

| Major and/or Controlling Work Items | No Effect All | Affected Less Than | Affected More Than 50% | No Work All Day |
|---|---|---|---|---|
| | ☐ | ☐ | ☐ | ☐ |
| | ☐ | ☐ | ☐ | ☐ |
| | ☐ | ☐ | ☐ | ☐ |
| | ☐ | ☐ | ☐ | ☐ |
| | ☐ | ☐ | ☐ | ☐ |
| | ☐ | ☐ | ☐ | ☐ |

## CONTRACTOR PAST PERFORMANCE

| | |
|---|---|
| PURSUIT OF THE WORK: | [X] Yes [ ] No |
| CONFORMANCE WITH CONTRACT DOCUMENTS: | [X] Yes [ ] No |

| TECHNICIANS SIGNATURE AND RATING: | HOURS AT JOB SITE | | TOTAL HOURS |
|---|---|---|---|
| | FROM: 6:30 AM | TO: 3:30 PM | 8.5 |
| ENGINEER IN CHARGE (NAME, RANK AND INITIALS): | | | |
| | DATE: | | |
| | | | |

**CITY OF JACKSONVILLE**
**CONTRACTOR'S DAILY REPORT**

Attachment Page

| Date | FDOT/COJ Contract ID: | Financial Project ID: | Inspector: |
|---|---|---|---|
| 11/1/2024 | 71178-21 | 6735189428 | Brad Clayton |

| Remarks | | | | |
|---|---|---|---|---|
| General: | | | | |
| | | | | |
| | | | | |
| | | | | |
| | | | | |
| | | | | |
| | | | | |
| | | | | |
| | | | | |
| Accidents: | See accident report dated: | Day of week | Contract day | Total days |
| x No [ ] Yes | | Friday | 313 | 566 |
| Visitors: | | | | |

**Contractor(s) Equipment (Active or Idle)**

| Contr/ Sub # | Equipment ID | Description | # Pieces | # Used | Total Hours Used |
|---|---|---|---|---|---|
| 1 | | Street sweeper | 1 | 1 | 8 |
| 1 | | Pump | 2 | 2 | 8 |
| 1 | | Mobile Crane | 1 | 1 | 8 |
| 2 | | Excavator (mini) | 1 | 1 | 8 |
| 2 | | loader | 1 | 1 | 8 |
| 2 | | Work Truck | 2 | 1 | 8 |
| 2 | | hydraulic rotary drilling rig | 1 | 1 | 8 |
| | | | | | |
| | | | | | |
| | | | | | |
| | | | | | |
| | | | | | |
| | | | | | |
| | | | | | |
| | | | | | |
| | | | | | |
| | | | | | |
| | | | | | |

Docusign Envelope ID: F54DB230-A150-452A-B3F0-14C4A48C193C

**CITY OF JACKSONVILLE**
**CONTRACTOR'S DAILY REPORT**

| Date: | FDOT/COJ Contract ID: | Financial Project ID: | Inspector: |
|---|---|---|---|
| 11/4/2024 | 70646-23 | 6735189428 | Brad Clayton |

| HIGH Temp: 83 | AM Conditions: | PM Conditions |
|---|---|---|
| LOW Temp: 70 | Clear | Clear |

| Remarks |
|---|
| General: |
| JBC: 6:30-5:30 |
| |
| 1) Contractor continued dewatering |
| 2) Contractor moved material around site |
| 3) Excavated soil in Section 1 is being used on-site for backfill for sheet pile anchors in Section 2/3 |
| 4) Prepped form for lower R wall Cap pour, sec 1, sta 104 |
| 5) Section 1, R wall cap tied rebar cont |
| 6) Repaired minor damage from post cap pour, sec 1, lower R wall |
| 7) removed template for sec 4 trussle bridge, drove piles to grade. |
| 8) 26 Truck loads removed dirt offsite (308T) |
| 9) |
| |
| |
| |

| Accidents: | See accident report dated: | Day of week | Contract day | Total days |
|---|---|---|---|---|
| X No ☐ Yes | | Monday | 316 | 566 |

Visitors:

**Contractor(s) and Personnel**

| # | Name | Type | # | Hrs | Type | # | Hrs | Type | # | Hrs |
|---|---|---|---|---|---|---|---|---|---|---|
| 1 | **J.B.Coxwell** | Supt | 1 | 10 | Foreman | 2 | 10 | Skilled | 23 | 10 |
| | | Semi Skilled | | | Common | | | Trainee | | |
| 2 | | Supt | | | Foreman | | | Skilled | | |
| | | Semi Skilled | | | Common | | | Trainee | | |
| 3 | | Supt | | | Foreman | | | Skilled | | |
| | | Semi Skilled | | | Common | | | Trainee | | |
| 4 | | Supt | | | Foreman | | | Skilled | | |
| | | Semi Skilled | | | Common | | | Trainee | | |

**Contractor(s) Equipment (Active or Idle)**

| Contr/ | Equipment ID | Description | # | # | Total Hours Used |
|---|---|---|---|---|---|
| 1 | | Work trucks | 2 | 2 | 10 |

| | | | | | |
|---|---|---|---|---|---|
| 1 | | Trailor | 1 | 1 | 10 |
| 1 | | Mini excavator | 1 | 1 | 10 |
| 1 | | Lull | 1 | 1 | 10 |
| 1 | | Dozer | 1 | 1 | 10 |
| 1 | | Frontloader | 1 | 1 | 10 |
| 1 | | Excavator | 2 | 2 | 10 |
| 1 | | Water truck | 2 | 2 | 10 |
| 1 | | Crawler Crane | 2 | 1 | 10 |
| 1 | | Vibratory hammer | 1 | 1 | 10 |

| **Date:** | **Contract ID:** |
|---|---|
| 11/4/2024 | 71178-21 |

**CITY OF JACKSONVILLE**
**CONTRACTOR'S DAILY REPORT**

| **Estimated Work Performed** | | | | | | | |
|---|---|---|---|---|---|---|---|
| Contr/ Sub # | Line Item # | Pay Item Code | Location | Time (AM/PM) | | Installed | |
| | | | | Begin | End | Qty | Units |
| | | | | | | | |
| | | | | | | | |
| | | | | | | | |
| | | | | | | | |
| | | | | | | | |
| | | | | | | | |
| | | | | | | | |
| | | | | | | | |

EFFECTS OF WEATHER ON MAJOR WORK ITEMS (CHECK CONTROLLING ITEMS):

| Major and/or Controlling Work Items | No Effect All | Affected Less Than | Affected More Than 50% | No Work All Day |
|---|---|---|---|---|
| | x | | | |
| | | | | |
| | | | | |
| | | | | |
| | | | | |
| | | | | |

## CONTRACTOR PAST PERFORMANCE

| | |
|---|---|
| PURSUIT OF THE WORK: | [X] Yes [ ] No |
| CONFORMANCE WITH CONTRACT DOCUMENTS: | [X] Yes [ ] No |

| TECHNICIANS SIGNATURE AND RATING: | HOURS AT JOB SITE | | TOTAL HOURS |
|---|---|---|---|
| | FROM: 6:30 AM | TO: 5:30 PM | 10.5 |
| ENGINEER IN CHARGE (NAME, RANK AND INITIALS): | | | |
| | DATE: | | |
| | | | |

**CITY OF JACKSONVILLE**
**CONTRACTOR'S DAILY REPORT**

Attachment Page

| Date | FDOT/COJ Contract ID: | Financial Project ID: | Inspector: |
|---|---|---|---|
| 11/4/2024 | 71178-21 | 6735189428 | Brad Clayton |

| Remarks | | | | |
|---|---|---|---|---|
| General: | | | | |
| | | | | |
| | | | | |
| | | | | |
| | | | | |
| | | | | |
| | | | | |
| | | | | |
| | | | | |
| Accidents: | See accident report dated: | Day of week | Contract day | Total days |
| x No ☐ Yes | | Monday | 316 | 566 |
| Visitors: | | | | |

**Contractor(s) Equipment (Active or Idle)**

| Contr/ Sub # | Equipment ID | Description | # Pieces | # Used | Total Hours Used |
|---|---|---|---|---|---|
| 1 | | Street sweeper | 1 | 1 | 10 |
| 1 | | Pump | 2 | 2 | 10 |
| 1 | | Mobile Crane | 1 | 1 | 10 |
| 2 | | Excavator (mini) | 1 | 1 | 10 |
| 2 | | loader | 1 | 1 | 10 |
| 2 | | Work Truck | 2 | 1 | 10 |
| | | | | | |
| | | | | | |
| | | | | | |
| | | | | | |
| | | | | | |
| | | | | | |
| | | | | | |
| | | | | | |
| | | | | | |
| | | | | | |
| | | | | | |
| | | | | | |

Docusign Envelope ID: F54DB230-A150-452A-B3F0-14C4A48C193C

**CITY OF JACKSONVILLE**
**CONTRACTOR'S DAILY REPORT**

| Date: | FDOT/COJ Contract ID: | Financial Project ID: | Inspector: |
|---|---|---|---|
| 11/21/2024 | 70646-23 | | Jeremy Cundiff |

| HIGH Temp: 73 | AM Conditions: | PM Conditions: |
|---|---|---|
| LOW Temp: 58 | Clear | Clear |

| Remarks |
|---|
| General: |
| JBC 7:00 am to 5:30pm |
| |
| 1) Contractor continued to dewater |
| 2) Contractor Continued moving material throughout site |
| 3)Removed forms from previous pour and stacked and cleaned in section 3 laydown yard |
| 4) Installing whalers for section 4 trussell bridge |
| 5) Continued to work on section 4 trussell bridge |
| 6) Setting forms for L lower cap between station 103+00-103+50 |
| 7)Began setting frame for section 4 trussell bridge |
| 8) |
| 9) |
| 10) |
| |
| |

| Accidents: | See accident report dated: | Day of week | Contract day | Total days |
|---|---|---|---|---|
| X No ☐ Yes | | Thursday | 332 | 579 |

Visitors:

**Contractor(s) and Personnel**

| # | Name | Type | # | Hrs | Type | # | Hrs | Type | # | Hrs |
|---|---|---|---|---|---|---|---|---|---|---|
| 1 | **J.B.Coxwell** | Supt | 1 | 10 | Foreman | 2 | 10 | Skilled | 12 | 10 |
| | | Semi Skilled | | | Common | | | Trainee | | |
| 2 | | Supt | | | Foreman | | | Skilled | | |
| | | Semi Skilled | | | Common | | | Trainee | | |
| 3 | | Supt | | | Foreman | | | Skilled | | |
| | | Semi Skilled | | | Common | | | Trainee | | |
| 4 | | Supt | | | Foreman | | | Skilled | | |
| | | Semi Skilled | | | Common | | | Trainee | | |

**Contractor(s) Equipment (Active or Idle)**

| Contr/ | Equipment ID | Description | # | # Used | Total Hours Used |
|---|---|---|---|---|---|
| 1 | | Work trucks | 2 | 2 | 10 |

| | | | | | |
|---|---|---|---|---|---|
| 1 | | Trailor | 1 | 1 | 10 |
| 1 | | Vibratory Hammer | 1 | 1 | 10 |
| | | | | | |
| | | | | | |
| | | | | | |
| | | | | | |
| | | | | | |
| | | | | | |
| | | | | | |

| Date: | Contract ID: |
|---|---|
| 11/21/2024 | 71178-21 |

**CITY OF JACKSONVILLE**
**CONTRACTOR'S DAILY REPORT**

| Estimated Work Performed | | | | | | | |
|---|---|---|---|---|---|---|---|
| Contr/ Sub # | Line Item # | Pay Item Code | Location | Time (AM/PM) | | Installed | |
| | | | | Begin | End | Qty | Units |
| | | | | | | | |
| | | | | | | | |
| | | | | | | | |
| | | | | | | | |
| | | | | | | | |
| | | | | | | | |
| | | | | | | | |
| | | | | | | | |

EFFECTS OF WEATHER ON MAJOR WORK ITEMS (CHECK CONTROLLING ITEMS):

| Major and/or Controlling Work Items | No Effect All Day | Affected Less Than 50% of Work Day | Affected More Than 50% Of Work Day | No Work All Day |
|---|---|---|---|---|
| | x | | | |
| | | | | |
| | | | | |
| | | | | |
| | | | | |
| | | | | |

## CONTRACTOR PAST PERFORMANCE

| | |
|---|---|
| PURSUIT OF THE WORK: | [X] Yes [ ] No |
| CONFORMANCE WITH CONTRACT DOCUMENTS: | [X] Yes [ ] No |

| TECHNICIANS SIGNATURE AND RATING: | HOURS AT JOB SITE | | TOTAL HOURS |
|---|---|---|---|
| David J Cundiff | FROM: 7:00 AM | TO: 5:30 PM | 10.0 |
| ENGINEER IN CHARGE (NAME, RANK AND INITIALS): | | | |
| | DATE: | | |
| | | | |

Docusign Envelope ID: F54DB230-A150-452A-B3F0-14C4A48C193C

**CITY OF JACKSONVILLE**
**CONTRACTOR'S DAILY REPORT**

Attachment Page

| Date | | Financial Project ID: | Inspector: |
|---|---|---|---|
| 11/21/2024 | 71178-21 | 6735189428 | Jeremy Cundiff |

| Remarks | | | | |
|---|---|---|---|---|
| General: | | | | |
| | | | | |
| | | | | |
| | | | | |
| | | | | |
| | | | | |
| | | | | |
| | | | | |
| | | | | |
| Accidents: x No ☐ Yes | See accident report dated: | Day of week Thursday | Contract day 332 | Total days 579 |
| Visitors: | | | | |

**Contractor(s) Equipment (Active or Idle)**

| Contr/ Sub # | Equipment ID | Description | # Pieces | # Used | Total Hours Used |
|---|---|---|---|---|---|
| 1 | CAT G350 | Front Loader | 2 | 2 | 10 |
| 1 | CAT 335 | Excavator | 2 | 2 | 10 |
| 1 | CAT CS54B | Roller | 1 | 1 | 10 |
| 1 | CAT CD087 | Dozer | 1 | 1 | 10 |
| 1 | | Water Truck | 2 | 1 | 10 |
| 1 | Liebherr | Crawler Crane | 1 | 1 | 10 |
| 1 | | Water Pump | 3 | 2 | 10 |
| 1 | | Fuel Truck | 1 | 1 | 10 |
| 1 | Grove CRT001 | Mobile Crane | 1 | 1 | 10 |
| | | | | | |
| 1 | CAT 305E | Mini Excavator | 1 | 1 | 10 |
| | | | | | |
| | | | | | |
| | | | | | |
| | | | | | |
| | | | | | |
| | | | | | |
| | | | | | |

Docusign Envelope ID: F54DB230-A150-452A-B3F0-14C4A48C193C

**CITY OF JACKSONVILLE**
**CONTRACTOR'S DAILY REPORT**

| Date: | FDOT/COJ Contract ID: | Financial Project ID: | Inspector: |
|---|---|---|---|
| 11/22/2024 | 70646-23 | | Jeremy Cundiff |

| HIGH Temp: 60 | AM Conditions: | PM Conditions: |
|---|---|---|
| LOW Temp: 44 | Clear | Clear |

| Remarks |
|---|
| General: |
| JBC 7:00 am to 3:30 PM |
| |
| 1) Contractor continued to dewater |
| 2) Contractor Continued moving material throughout site |
| 3)Removed forms from previous pour and stacked and cleaned in section 3 laydown yard |
| 4) Poured Left lower cap between station 103+00-103+50 |
| 5) Continued to work on section 4 trussell bridge |
| 6) Continued to set support beams for section 4 trussel bridge |
| 7) |
| 8) |
| 9) |
| 10) |
| |
| |

| Accidents: | See accident report dated: | Day of week | Contract day | Total days |
|---|---|---|---|---|
| X No ☐ Yes | | Friday | 334 | 579 |

Visitors:

**Contractor(s) and Personnel**

| # | Name | Type | # | Hrs | Type | # | Hrs | Type | # | Hrs |
|---|---|---|---|---|---|---|---|---|---|---|
| 1 | **J.B.Coxwell** | Supt | 1 | 8 | Foreman | 2 | 8 | Skilled | 12 | 8 |
| | | Semi Skilled | | | Common | | | Trainee | | |
| 2 | | Supt | | | Foreman | | | Skilled | | |
| | | Semi Skilled | | | Common | | | Trainee | | |
| 3 | | Supt | | | Foreman | | | Skilled | | |
| | | Semi Skilled | | | Common | | | Trainee | | |
| 4 | | Supt | | | Foreman | | | Skilled | | |
| | | Semi Skilled | | | Common | | | Trainee | | |

**Contractor(s) Equipment (Active or Idle)**

| Contr/ | Equipment ID | Description | # | # Used | Total Hours Used |
|---|---|---|---|---|---|
| 1 | | Work trucks | 2 | 2 | 8 |

| | | | | | |
|---|---|---|---|---|---|
| 1 | | Trailor | 1 | 1 | 8 |
| 1 | | Vibratory Hammer | 1 | 1 | 8 |
| | | | | | |
| | | | | | |
| | | | | | |
| | | | | | |
| | | | | | |
| | | | | | |
| | | | | | |

| Date: | Contract ID: |
|---|---|
| 11/22/2024 | 71178-21 |

**CITY OF JACKSONVILLE**
**CONTRACTOR'S DAILY REPORT**

| Estimated Work Performed | | | | | | | |
|---|---|---|---|---|---|---|---|
| Contr/ Sub # | Line Item # | Pay Item Code | Location | Time (AM/PM) | | Installed | |
| | | | | Begin | End | Qty | Units |
| | | | | | | | |
| | | | | | | | |
| | | | | | | | |
| | | | | | | | |
| | | | | | | | |
| | | | | | | | |
| | | | | | | | |
| | | | | | | | |

EFFECTS OF WEATHER ON MAJOR WORK ITEMS (CHECK CONTROLLING ITEMS):

| Major and/or Controlling Work Items | No Effect All Day | Affected Less Than 50% of Work Day | Affected More Than 50% Of Work Day | No Work All Day |
|---|---|---|---|---|
| | x | | | |
| | | | | |
| | | | | |
| | | | | |
| | | | | |
| | | | | |

## CONTRACTOR PAST PERFORMANCE

| | |
|---|---|
| PURSUIT OF THE WORK: | [X] Yes [ ] No |
| CONFORMANCE WITH CONTRACT DOCUMENTS: | [X] Yes [ ] No |

| TECHNICIANS SIGNATURE AND RATING: | HOURS AT JOB SITE | | TOTAL HOURS |
|---|---|---|---|
| David J Cundiff | FROM: 7:00 AM | TO: 3:30 PM | 8.0 |
| ENGINEER IN CHARGE (NAME, RANK AND INITIALS): | | | |
| | DATE: | | |
| | | | |

Docusign Envelope ID: F54DB230-A150-452A-B3F0-14C4A48C193C

**CITY OF JACKSONVILLE**
**CONTRACTOR'S DAILY REPORT**

Attachment Page

| Date | | Financial Project ID: | Inspector: |
|---|---|---|---|
| 11/22/2024 | 71178-21 | 6735189428 | Jeremy Cundiff |

| Remarks | | | | |
|---|---|---|---|---|
| General: | | | | |
| | | | | |
| Concrete Inspection | | | | |
| MAE | | | | |
| Slump 7.25" | | | | |
| Air 1.4% | | | | |
| Temp 71* | | | | |
| | | | | |
| | | | | |
| Accidents: | See accident report dated: | Day of week | Contract day | Total days |
| x No [ ] Yes | | Friday | 334 | 579 |
| Visitors: | | | | |

**Contractor(s) Equipment (Active or Idle)**

| Contr/ Sub # | Equipment ID | Description | # Pieces | # Used | Total Hours Used |
|---|---|---|---|---|---|
| 1 | CAT G350 | Front Loader | 2 | 2 | 8 |
| 1 | CAT 335 | Excavator | 2 | 2 | 8 |
| 1 | CAT CS54B | Roller | 1 | 1 | 8 |
| 1 | CAT CD087 | Dozer | 1 | 1 | 8 |
| 1 | | Water Truck | 2 | 1 | 8 |
| 1 | Liebherr | Crawler Crane | 1 | 1 | 8 |
| 1 | | Water Pump | 3 | 2 | 8 |
| 1 | | Fuel Truck | 1 | 1 | 8 |
| 1 | Grove CRT001 | Mobile Crane | 1 | 1 | 8 |
| | | | | | |
| 1 | CAT 305E | Mini Excavator | 1 | 1 | 8 |
| | | | | | |
| | | | | | |
| | | | | | |
| | | | | | |
| | | | | | |
| | | | | | |
| | | | | | |

Docusign Envelope ID: F54DB230-A150-452A-B3F0-14C4A48C193C

**CITY OF JACKSONVILLE**
**CONTRACTOR'S DAILY REPORT**

| Date: | FDOT/COJ Contract ID: | Financial Project ID: | Inspector: |
|---|---|---|---|
| 11/23/2024 | 70646-23 | 6735189428 | Michael Moore |

| HIGH Temp: 55 | AM Conditions: | PM Conditions: |
|---|---|---|
| LOW Temp: 41 | Partly cloudy | Partly cloudy |

| Remarks |
|---|
| General: |
| J.B.C |
| 1) Broke down forms for section 1's left wall cap from station 104+00 - 103+50 |
| 2) Site clean up. |
| 3) Continued working on trussle bridge in section 4. |
| Meskel |
| 1) Dropped of concrete test cylinders to be stowed in cure room and await breaks. |

| Accidents: | See accident report dated: | Day of week | Contract day | Total days |
|---|---|---|---|---|
| X No ☐ Yes | | Saturday | 335 | 550 |

Visitors:

**Contractor(s) and Personnel**

| # | Name | Type | # | Hrs | Type | # | Hrs | Type | # | Hrs |
|---|---|---|---|---|---|---|---|---|---|---|
| 1 | J.B.C. | Supt | 1 | 8 | Foreman | 1 | 8 | Skilled | 10 | 8 |
| | | Semi Skilled | | | Common | | | Trainee | | |
| 2 | | Supt | | | Foreman | | | Skilled | | |
| | | Semi Skilled | | | Common | | | Trainee | | |
| 3 | | Supt | | | Foreman | | | Skilled | | |
| | | Semi Skilled | | | Common | | | Trainee | | |
| 4 | | Supt | | | Foreman | | | Skilled | | |
| | | Semi Skilled | | | Common | | | Trainee | | |

**Contractor(s) Equipment (Active or Idle)**

| Contr/ | Equipment ID | Description | # | # Used | Total Hours Used |
|---|---|---|---|---|---|
| 1 | | Work trucks | 3 | 3 | 8 |

| | | | | | |
|---|---|---|---|---|---|
| 1 | | Trailor | 1 | 1 | 8 |
| 1 | | Mini excavator | 1 | 1 | 8 |
| 1 | | Pumps | 2 | 2 | 8 |
| 1 | | Vibratory hammer | 1 | 1 | 8 |
| 1 | | Frontloader | 1 | 1 | 8 |
| 1 | | Excavator | 2 | 2 | 8 |
| 1 | | Water truck | 2 | 2 | 8 |
| 1 | | Crane | 1 | 1 | 8 |
| | | | | | |

| **Date:** | **Contract ID:** |
|---|---|
| 11/23/2024 | 71178-21 |

**CITY OF JACKSONVILLE**
**CONTRACTOR'S DAILY REPORT**

| **Estimated Work Performed** | | | | | | | |
|---|---|---|---|---|---|---|---|
| Contr/ Sub # | Line Item # | Pay Item Code | Location | Time (AM/PM) | | Installed | |
| | | | | Begin | End | Qty | Units |
| | | | | | | | |
| | | | | | | | |
| | | | | | | | |
| | | | | | | | |
| | | | | | | | |
| | | | | | | | |
| | | | | | | | |
| | | | | | | | |

EFFECTS OF WEATHER ON MAJOR WORK ITEMS (CHECK CONTROLLING ITEMS):

| Major and/or Controlling Work Items | No Effect All Day | Affected Less Than 50% of Work Day | Affected More Than 50% Of Work Day | No Work All Day |
|---|---|---|---|---|
| | ☐ | ☐ | ☐ | ☐ |
| | ☐ | ☐ | ☐ | ☐ |
| | ☐ | ☐ | ☐ | ☐ |
| | ☐ | ☐ | ☐ | ☐ |
| | ☐ | ☐ | ☐ | ☐ |
| | ☐ | ☐ | ☐ | ☐ |

Docusign Envelope ID: F54DB230-A150-452A-B3F0-14C4A48C193C

## CONTRACTOR PAST PERFORMANCE

| | |
|---|---|
| PURSUIT OF THE WORK: | [X] Yes [ ] No |
| CONFORMANCE WITH CONTRACT DOCUMENTS: | [X] Yes [ ] No |

| TECHNICIANS SIGNATURE AND RATING: | HOURS AT JOB SITE | | TOTAL HOURS |
|---|---|---|---|
| | FROM: 7:00 AM | TO: 3:30 PM | 8.0 |
| ENGINEER IN CHARGE (NAME, RANK AND INITIALS): | | | |
| | DATE: | | |
| | | | |

Docusign Envelope ID: F54DB230-A150-452A-B3F0-14C4A48C193C

**CITY OF JACKSONVILLE**
**CONTRACTOR'S DAILY REPORT**

Attachment Page

| Date | FDOT/COJ Contract ID: | Financial Project ID: | Inspector: |
|---|---|---|---|
| 11/23/2024 | 71178-21 | | Michael Moore |

| Remarks | | | | |
|---|---|---|---|---|
| General: | | | | |
| | | | | |
| | | | | |
| | | | | |
| | | | | |
| | | | | |
| | | | | |
| | | | | |
| | | | | |
| Accidents: x No ☐ Yes | See accident report dated: | Day of week Saturday | Contract day 335 | Total days 550 |
| Visitors: | | | | |

**Contractor(s) Equipment (Active or Idle)**

| Contr/ Sub # | Equipment ID | Description | # Pieces | # Used | Total Hours Used |
|---|---|---|---|---|---|
| | | | | | |
| | | | | | |
| | | | | | |
| | | | | | |
| | | | | | |
| | | | | | |
| | | | | | |
| | | | | | |
| | | | | | |
| | | | | | |
| | | | | | |
| | | | | | |
| | | | | | |
| | | | | | |
| | | | | | |
| | | | | | |
| | | | | | |

Docusign Envelope ID: F54DB230-A150-452A-B3F0-14C4A48C193C

**CITY OF JACKSONVILLE**
**CONTRACTOR'S DAILY REPORT**

| Date: | FDOT/COJ Contract ID: | Financial Project ID: | Inspector: |
|---|---|---|---|
| 11/25/2024 | 70646-23 | 6735189428 | Michael Moore |

| HIGH Temp: 55 | AM Conditions: | PM Conditions: |
|---|---|---|
| LOW Temp: 50 | Partly cloudy | Partly cloudy |

| Remarks |
|---|
| General: |
| J.B.C |
| 1) Broke down forms from section 1's Left wall cap. |
| 2) Eqipment maintenance. |
| 3) Set up barriers along section 1's and 4's matchline to protect drive access. |
| 4) Continued production on trussel bridge in section 4. |
| 5) Site clen up. |

| Accidents: | See accident report dated: | Day of week | Contract day | Total days |
|---|---|---|---|---|
| X No ☐ Yes | | Monday | 337 | 550 |
| Visitors: | | | | |

**Contractor(s) and Personnel**

| # | Name | Type | # | Hrs | Type | # | Hrs | Type | # | Hrs |
|---|---|---|---|---|---|---|---|---|---|---|
| 1 | J.B.C. | Supt | 2 | 8 | Foreman | 1 | 8 | Skilled | 10 | 8 |
| | | Semi Skilled | | | Common | | | Trainee | | |
| 2 | | Supt | | | Foreman | | | Skilled | | |
| | | Semi Skilled | | | Common | | | Trainee | | |
| 3 | | Supt | | | Foreman | | | Skilled | | |
| | | Semi Skilled | | | Common | | | Trainee | | |
| 4 | | Supt | | | Foreman | | | Skilled | | |
| | | Semi Skilled | | | Common | | | Trainee | | |

**Contractor(s) Equipment (Active or Idle)**

| Contr/ | Equipment ID | Description | # | # Used | Total Hours Used |
|---|---|---|---|---|---|
| 1 | | Work trucks | 3 | 3 | 8 |

| | | | | | |
|---|---|---|---|---|---|
| 1 | | Trailor | 1 | 1 | 8 |
| 1 | | Mini excavator | 1 | 1 | 8 |
| 1 | | Pumps | 2 | 2 | 8 |
| 1 | | Vibratory hammer | 1 | 1 | 8 |
| 1 | | Frontloader | 1 | 1 | 8 |
| 1 | | Excavator | 2 | 2 | 8 |
| 1 | | Water truck | 2 | 2 | 8 |
| 1 | | Crane | 1 | 1 | 8 |
| | | | | | |

| **Date:** | **Contract ID:** |
|---|---|
| 11/25/2024 | 71178-21 |

**CITY OF JACKSONVILLE**
**CONTRACTOR'S DAILY REPORT**

| **Estimated Work Performed** | | | | | | | |
|---|---|---|---|---|---|---|---|
| Contr/ Sub # | Line Item # | Pay Item Code | Location | Time (AM/PM) | | Installed | |
| | | | | Begin | End | Qty | Units |
| | | | | | | | |
| | | | | | | | |
| | | | | | | | |
| | | | | | | | |
| | | | | | | | |
| | | | | | | | |
| | | | | | | | |
| | | | | | | | |

EFFECTS OF WEATHER ON MAJOR WORK ITEMS (CHECK CONTROLLING ITEMS):

| Major and/or Controlling Work Items | No Effect All Day | Affected Less Than 50% of Work Day | Affected More Than 50% Of Work Day | No Work All Day |
|---|---|---|---|---|
| | ☐ | ☐ | ☐ | ☐ |
| | ☐ | ☐ | ☐ | ☐ |
| | ☐ | ☐ | ☐ | ☐ |
| | ☐ | ☐ | ☐ | ☐ |
| | ☐ | ☐ | ☐ | ☐ |
| | ☐ | ☐ | ☐ | ☐ |

## CONTRACTOR PAST PERFORMANCE

| | |
|---|---|
| PURSUIT OF THE WORK: | [X] Yes [ ] No |
| CONFORMANCE WITH CONTRACT DOCUMENTS: | [X] Yes [ ] No |

| TECHNICIANS SIGNATURE AND RATING: | HOURS AT JOB SITE | | TOTAL HOURS |
|---|---|---|---|
| | FROM: 7:00 AM | TO: 5:30 PM | 10.0 |
| ENGINEER IN CHARGE (NAME, RANK AND INITIALS): | | | |
| | DATE: | | |
| | | | |

Docusign Envelope ID: F54DB230-A150-452A-B3F0-14C4A48C193C

**CITY OF JACKSONVILLE**
**CONTRACTOR'S DAILY REPORT**

Attachment Page

| Date | FDOT/COJ Contract ID: | Financial Project ID: | Inspector: |
|---|---|---|---|
| 11/25/2024 | 71178-21 | | Michael Moore |

| Remarks | | | | |
|---|---|---|---|---|
| General: | | | | |
| | | | | |
| | | | | |
| | | | | |
| | | | | |
| | | | | |
| | | | | |
| | | | | |
| | | | | |
| Accidents: x No ☐ Yes | See accident report dated: | Day of week Monday | Contract day 337 | Total days 550 |
| Visitors: | | | | |

**Contractor(s) Equipment (Active or Idle)**

| Contr/ Sub # | Equipment ID | Description | # Pieces | # Used | Total Hours Used |
|---|---|---|---|---|---|
| | | | | | |
| | | | | | |
| | | | | | |
| | | | | | |
| | | | | | |
| | | | | | |
| | | | | | |
| | | | | | |
| | | | | | |
| | | | | | |
| | | | | | |
| | | | | | |
| | | | | | |
| | | | | | |
| | | | | | |
| | | | | | |
| | | | | | |

Docusign Envelope ID: F54DB230-A150-452A-B3F0-14C4A48C193C

**CITY OF JACKSONVILLE**
**CONTRACTOR'S DAILY REPORT**

| Date: | FDOT/COJ Contract ID: | Financial Project ID: | Inspector: |
|---|---|---|---|
| 11/26/2024 | 70646-23 | 6735189428 | Michael Moore |

| HIGH Temp: 58 | AM Conditions: | PM Conditions: |
|---|---|---|
| LOW Temp: 50 | Partly cloudy | Partly cloudy |

| Remarks |
|---|
| General: |
| J.B.C |
| 1) Cleaned and finished surface of section 1's Left wall cap. |
| 2) Backfilled behind section ones left wall cap. |
| 3) Constructed scaffolding for future production on section 's upper left wall. |
| 4) Erosion control & site up keep. |
| 5) Continue to assemble trestle bridge. |

| Accidents: | See accident report dated: | Day of week | Contract day | Total days |
|---|---|---|---|---|
| X No ☐ Yes | | Tuesday | 338 | 550 |
| Visitors: | | | | |

**Contractor(s) and Personnel**

| # | Name | Type | # | Hrs | Type | # | Hrs | Type | # | Hrs |
|---|---|---|---|---|---|---|---|---|---|---|
| 1 | **J.B.C.** | Supt | 2 | 10 | Foreman | | | Skilled | 11 | 10 |
| | | Semi Skilled | | | Common | | | Trainee | | |
| 2 | | Supt | | | Foreman | | | Skilled | | |
| | | Semi Skilled | | | Common | | | Trainee | | |
| 3 | | Supt | | | Foreman | | | Skilled | | |
| | | Semi Skilled | | | Common | | | Trainee | | |
| 4 | | Supt | | | Foreman | | | Skilled | | |
| | | Semi Skilled | | | Common | | | Trainee | | |

**Contractor(s) Equipment (Active or Idle)**

| Contr/ | Equipment ID | Description | # | # Used | Total Hours Used |
|---|---|---|---|---|---|
| 1 | | Work trucks | 3 | 3 | 10 |

| | | | | | |
|---|---|---|---|---|---|
| 1 | | Trailor | 1 | 1 | 10 |
| 1 | | Mini excavator | 1 | 1 | 10 |
| 1 | | Pumps | 2 | 2 | 10 |
| 1 | | Vibratory hammer | 1 | 1 | 10 |
| 1 | | Frontloader | 1 | 1 | 10 |
| 1 | | Excavator | 2 | 2 | 10 |
| 1 | | Water truck | 2 | 2 | 10 |
| 1 | | Crane | 1 | 1 | 10 |
| | | | | | |

| **Date:** | **Contract ID:** |
|---|---|
| 11/26/2024 | 71178-21 |

**CITY OF JACKSONVILLE**
**CONTRACTOR'S DAILY REPORT**

| **Estimated Work Performed** | | | | | | | |
|---|---|---|---|---|---|---|---|
| Contr/ Sub # | Line Item # | Pay Item Code | Location | Time (AM/PM) | | Installed | |
| | | | | Begin | End | Qty | Units |
| | | | | | | | |
| | | | | | | | |
| | | | | | | | |
| | | | | | | | |
| | | | | | | | |
| | | | | | | | |
| | | | | | | | |
| | | | | | | | |

EFFECTS OF WEATHER ON MAJOR WORK ITEMS (CHECK CONTROLLING ITEMS):

| Major and/or Controlling Work Items | No Effect All Day | Affected Less Than 50% of Work Day | Affected More Than 50% Of Work Day | No Work All Day |
|---|---|---|---|---|
| | ☐ | ☐ | ☐ | ☐ |
| | ☐ | ☐ | ☐ | ☐ |
| | ☐ | ☐ | ☐ | ☐ |
| | ☐ | ☐ | ☐ | ☐ |
| | ☐ | ☐ | ☐ | ☐ |
| | ☐ | ☐ | ☐ | ☐ |

## CONTRACTOR PAST PERFORMANCE

| | |
|---|---|
| PURSUIT OF THE WORK: | [X] Yes [ ] No |
| CONFORMANCE WITH CONTRACT DOCUMENTS: | [X] Yes [ ] No |

| TECHNICIANS SIGNATURE AND RATING: | HOURS AT JOB SITE | | TOTAL HOURS |
|---|---|---|---|
| | FROM: 7:00 AM | TO: 5:30 PM | 10.0 |
| ENGINEER IN CHARGE (NAME, RANK AND INITIALS): | | | |
| | DATE: | | |
| | | | |

Docusign Envelope ID: F54DB230-A150-452A-B3F0-14C4A48C193C

**CITY OF JACKSONVILLE**
**CONTRACTOR'S DAILY REPORT**

Attachment Page

| Date | FDOT/COJ Contract ID: | Financial Project ID: | Inspector: |
|---|---|---|---|
| 11/26/2024 | 71178-21 | | Michael Moore |

| Remarks | | | | |
|---|---|---|---|---|
| General: | | | | |
| | | | | |
| | | | | |
| | | | | |
| | | | | |
| | | | | |
| | | | | |
| | | | | |
| | | | | |
| Accidents: x No ☐ Yes | See accident report dated: | Day of week Tuesday | Contract day 338 | Total days 550 |
| Visitors: | | | | |

**Contractor(s) Equipment (Active or Idle)**

| Contr/ Sub # | Equipment ID | Description | # Pieces | # Used | Total Hours Used |
|---|---|---|---|---|---|
| | | | | | |
| | | | | | |
| | | | | | |
| | | | | | |
| | | | | | |
| | | | | | |
| | | | | | |
| | | | | | |
| | | | | | |
| | | | | | |
| | | | | | |
| | | | | | |
| | | | | | |
| | | | | | |
| | | | | | |
| | | | | | |
| | | | | | |

Docusign Envelope ID: F54DB230-A150-452A-B3F0-14C4A48C193C

**CITY OF JACKSONVILLE**
**CONTRACTOR'S DAILY REPORT**

| Date: | FDOT/COJ Contract ID: | Financial Project ID: | Inspector: |
|---|---|---|---|
| 12/11/2024 | 70646-23 | | Jeremy Cundiff |

| HIGH Temp: 74 | AM Conditions: | PM Conditions: |
|---|---|---|
| LOW Temp: 65 | Windy | Afternoon Thunderstorms/windy |

| Remarks |
|---|
| General: |
| JBC 7:00 am to 5:30 pm |
| |
| 1) Continued patching and fixing imperfections in upper L return wall at station 105+00 |
| 2) Contractor Continued moving material throughout site |
| 3) Setting trusses/beams in section 4 for trussell bridge |
| 4) Received delivery for trench boxes from Sunbelt |
| 5) Prepping forms for upper Right bulkhead |
| 6) Prepping rebar and setting expansion bulkheads for upper R bulkhead wall at station 106+50 |
| 7) |
| 8) |
| 9) |
| 10) |
| |
| |

| Accidents: | See accident report dated: | Day of week | Contract day | Total days |
|---|---|---|---|---|
| X No ☐ Yes | | Wednesday | 353 | 579 |
| Visitors: | | | | |

**Contractor(s) and Personnel**

| # | Name | Type | # | Hrs | Type | # | Hrs | Type | # | Hrs |
|---|---|---|---|---|---|---|---|---|---|---|
| 1 | **J.B.Coxwell** | Supt | 2 | 10 | Foreman | 2 | 10 | Skilled | 12 | 10 |
| | | Semi Skilled | | | Common | | | Trainee | | |
| 2 | | Supt | | | Foreman | | | Skilled | | |
| | | Semi Skilled | | | Common | | | Trainee | | |
| 3 | | Supt | | | Foreman | | | Skilled | | |
| | | Semi Skilled | | | Common | | | Trainee | | |
| 4 | | Supt | | | Foreman | | | Skilled | | |
| | | Semi Skilled | | | Common | | | Trainee | | |

**Contractor(s) Equipment (Active or Idle)**

| Contr/ | Equipment ID | Description | # | # Used | Total Hours Used |
|---|---|---|---|---|---|
| 1 | | Work trucks | 2 | 2 | 10 |

| | | | | | |
|---|---|---|---|---|---|
| 1 | | Trailor | 1 | 1 | 10 |
| 1 | | Vibratory Hammer | 1 | 1 | 10 |
| | | | | | |
| | | | | | |
| | | | | | |
| | | | | | |
| | | | | | |
| | | | | | |
| | | | | | |

| Date: | Contract ID: |
|---|---|
| 12/11/2024 | 71178-21 |

**CITY OF JACKSONVILLE**
**CONTRACTOR'S DAILY REPORT**

| Estimated Work Performed | | | | | | | |
|---|---|---|---|---|---|---|---|
| Contr/ Sub # | Line Item # | Pay Item Code | Location | Time (AM/PM) | | Installed | |
| | | | | Begin | End | Qty | Units |
| | | | | | | | |
| | | | | | | | |
| | | | | | | | |
| | | | | | | | |
| | | | | | | | |
| | | | | | | | |
| | | | | | | | |
| | | | | | | | |

EFFECTS OF WEATHER ON MAJOR WORK ITEMS (CHECK CONTROLLING ITEMS):

| Major and/or Controlling Work Items | No Effect All Day | Affected Less Than 50% of Work Day | Affected More Than 50% Of Work Day | No Work All Day |
|---|---|---|---|---|
| | ☐ | x | ☐ | ☐ |
| | ☐ | ☐ | ☐ | ☐ |
| | ☐ | ☐ | ☐ | ☐ |
| | ☐ | ☐ | ☐ | ☐ |
| | ☐ | ☐ | ☐ | ☐ |
| | ☐ | ☐ | ☐ | ☐ |

## CONTRACTOR PAST PERFORMANCE

| | |
|---|---|
| PURSUIT OF THE WORK: | [X] Yes [ ] No |
| CONFORMANCE WITH CONTRACT DOCUMENTS: | [X] Yes [ ] No |

| TECHNICIANS SIGNATURE AND RATING: | HOURS AT JOB SITE | | TOTAL HOURS |
|---|---|---|---|
| David J Cundiff | FROM: 7:00 AM | TO: 5:30 PM | 10.0 |
| ENGINEER IN CHARGE (NAME, RANK AND INITIALS): | | | |
| | DATE: | | |
| | | | |

**CITY OF JACKSONVILLE**
**CONTRACTOR'S DAILY REPORT**

Attachment Page

| Date | | Financial Project ID: | Inspector: |
|---|---|---|---|
| 12/11/2024 | 71178-21 | 6735189428 | Jeremy Cundiff |

| Remarks |
|---|
| General: |
| |
| |
| |
| |
| |
| |
| |
| |

| Accidents: | See accident report dated: | Day of week | Contract day | Total days |
|---|---|---|---|---|
| x No ☐ Yes | | Wednesday | 353 | 579 |
| Visitors: | | | | |

**Contractor(s) Equipment (Active or Idle)**

| Contr/ Sub # | Equipment ID | Description | # Pieces | # Used | Total Hours Used |
|---|---|---|---|---|---|
| 1 | CAT G350 | Front Loader | 2 | 2 | 10 |
| 1 | CAT 335 | Excavator | 2 | 2 | 10 |
| 1 | CAT CS54B | Roller | 1 | 1 | 10 |
| 1 | CAT CD087 | Dozer | 1 | 1 | 10 |
| 1 | | Water Truck | 2 | 1 | 10 |
| 1 | Liebherr | Crawler Crane | 1 | 1 | 10 |
| 1 | | Water Pump | 3 | 2 | 10 |
| 1 | | Fuel Truck | 1 | 1 | 10 |
| 1 | Grove CRT001 | Mobile Crane | 1 | 1 | 10 |
| | | | | | |
| 1 | CAT 305E | Mini Excavator | 1 | 1 | 10 |
| | | | | | |
| | | | | | |
| | | | | | |
| | | | | | |
| | | | | | |
| | | | | | |
| | | | | | |

Docusign Envelope ID: F54DB230-A150-452A-B3F0-14C4A48C193C

**CITY OF JACKSONVILLE**
**CONTRACTOR'S DAILY REPORT**

| Date: | FDOT/COJ Contract ID: | Financial Project ID: | Inspector: |
|---|---|---|---|
| 12/12/2024 | 70646-23 | | Jeremy Cundiff |

| HIGH Temp: 62 | AM Conditions: | PM Conditions: |
|---|---|---|
| LOW Temp: 48 | Clear | Clear |

| Remarks |
|---|
| General: |
| JBC 7:00 am to 5:30 pm |
| |
| 1) Continued patching and fixing imperfections in upper L return wall at station 105+00 |
| 2) Contractor Continued moving material throughout site |
| 3) Setting trusses/beams in section 4 for trussell bridge |
| 4) Set trench box near Lower Right cap at station 103+80 and backfilled |
| 5) Setting forms for upper Right bulkhead at station 106+00-106+50 |
| 6) |
| 7) |
| 8) |
| 9) |
| 10) |
| |
| |

| Accidents: | See accident report dated: | Day of week | Contract day | Total days |
|---|---|---|---|---|
| X No ☐ Yes | | Thursday | 354 | 579 |
| Visitors: | | | | |

**Contractor(s) and Personnel**

| # | Name | Type | # | Hrs | Type | # | Hrs | Type | # | Hrs |
|---|---|---|---|---|---|---|---|---|---|---|
| 1 | **J.B.Coxwell** | Supt | 2 | 10 | Foreman | 2 | 10 | Skilled | 12 | 10 |
| | | Semi Skilled | | | Common | | | Trainee | | |
| 2 | | Supt | | | Foreman | | | Skilled | | |
| | | Semi Skilled | | | Common | | | Trainee | | |
| 3 | | Supt | | | Foreman | | | Skilled | | |
| | | Semi Skilled | | | Common | | | Trainee | | |
| 4 | | Supt | | | Foreman | | | Skilled | | |
| | | Semi Skilled | | | Common | | | Trainee | | |

**Contractor(s) Equipment (Active or Idle)**

| Contr/ | Equipment ID | Description | # | # Used | Total Hours Used |
|---|---|---|---|---|---|
| 1 | | Work trucks | 2 | 2 | 10 |

| | | | | | |
|---|---|---|---|---|---|
| 1 | | Trailor | 1 | 1 | 10 |
| 1 | | Vibratory Hammer | 1 | 1 | 10 |
| | | | | | |
| | | | | | |
| | | | | | |
| | | | | | |
| | | | | | |
| | | | | | |
| | | | | | |

| Date: | Contract ID: |
|---|---|
| 12/12/2024 | 71178-21 |

**CITY OF JACKSONVILLE**
**CONTRACTOR'S DAILY REPORT**

| Estimated Work Performed | | | | | | | |
|---|---|---|---|---|---|---|---|
| Contr/ Sub # | Line Item # | Pay Item Code | Location | Time (AM/PM) | | Installed | |
| | | | | Begin | End | Qty | Units |
| | | | | | | | |
| | | | | | | | |
| | | | | | | | |
| | | | | | | | |
| | | | | | | | |
| | | | | | | | |
| | | | | | | | |
| | | | | | | | |

EFFECTS OF WEATHER ON MAJOR WORK ITEMS (CHECK CONTROLLING ITEMS):

| Major and/or Controlling Work Items | No Effect All Day | Affected Less Than 50% of Work Day | Affected More Than 50% Of Work Day | No Work All Day |
|---|---|---|---|---|
| | ☐ | x | ☐ | ☐ |
| | ☐ | ☐ | ☐ | ☐ |
| | ☐ | ☐ | ☐ | ☐ |
| | ☐ | ☐ | ☐ | ☐ |
| | ☐ | ☐ | ☐ | ☐ |
| | ☐ | ☐ | ☐ | ☐ |

## CONTRACTOR PAST PERFORMANCE

| | |
|---|---|
| PURSUIT OF THE WORK: | [X] Yes [ ] No |
| CONFORMANCE WITH CONTRACT DOCUMENTS: | [X] Yes [ ] No |

| TECHNICIANS SIGNATURE AND RATING: | HOURS AT JOB SITE | | TOTAL HOURS |
|---|---|---|---|
| David J Cundiff | FROM: 7:00 AM | TO: 5:30 PM | 10.0 |
| ENGINEER IN CHARGE (NAME, RANK AND INITIALS): | | | |
| | DATE: | | |
| | | | |

Docusign Envelope ID: F54DB230-A150-452A-B3F0-14C4A48C193C

**CITY OF JACKSONVILLE**
**CONTRACTOR'S DAILY REPORT**

Attachment Page

| Date | | Financial Project ID: | Inspector: |
|---|---|---|---|
| 12/12/2024 | 71178-21 | 6735189428 | Jeremy Cundiff |

| Remarks |
|---|
| General: |
| |
| Moran pumped out 15,000 gallons of a mixture of water, sand and setiment out of large drum container |
| Contaminated soil was hauled to and isolated area and covered in plastic |
| Drum was disposed of off site |
| |
| |
| |
| |

| Accidents: | See accident report dated: | Day of week | Contract day | Total days |
|---|---|---|---|---|
| x No ☐ Yes | | Thursday | 354 | 579 |
| Visitors: | | | | |

**Contractor(s) Equipment (Active or Idle)**

| Contr/ Sub # | Equipment ID | Description | # Pieces | # Used | Total Hours Used |
|---|---|---|---|---|---|
| 1 | CAT G350 | Front Loader | 2 | 2 | 10 |
| 1 | CAT 335 | Excavator | 2 | 2 | 10 |
| 1 | CAT CS54B | Roller | 1 | 1 | 10 |
| 1 | CAT CD087 | Dozer | 1 | 1 | 10 |
| 1 | | Water Truck | 2 | 1 | 10 |
| 1 | Liebherr | Crawler Crane | 1 | 1 | 10 |
| 1 | | Water Pump | 3 | 2 | 10 |
| 1 | | Fuel Truck | 1 | 1 | 10 |
| 1 | Grove CRT001 | Mobile Crane | 1 | 1 | 10 |
| | | | | | |
| 1 | CAT 305E | Mini Excavator | 1 | 1 | 10 |
| | | | | | |
| | | | | | |
| | | | | | |
| | | | | | |
| | | | | | |
| | | | | | |
| | | | | | |

Docusign Envelope ID: F54DB230-A150-452A-B3F0-14C4A48C193C

# CONTRACTOR'S DOCUMENTATION

# CHANGE ORDER REQUEST #21

# TRESTLE LABOR

# MCCOY'S CREEK OUTFALL REALIGNMENT

# APRIL 16, 2025

Docusign Envelope ID: F54DB230-A150-452A-B3F0-14C4A48C193C

**J.B. Coxwell Contracting, Inc.**
6741 Lloyd Road West
Jacksonville, Florida 32254
Office (904) 786-1120 Fax (904) 783-2970

March 21, 2025

McCoy's Creek Channel Improvements
Installation/Removal of Trestle

Carl Padgett
GAI Consultants
12574 Flagler Center Blvd
Suite 202
Jacksonville, FL 32258

Project Name: McCoy's Creek Channel Improvements
County: Duval
COJ Contract #: 70646-23
Re: Installation/Removal of Trestle

Dear Mr. Padgett:

Due to the changes of the ingress/egress of the project, the original approach to construct the McCoy's Creek Channel Realignment was changed. Ito allow the project to remain on schedule, a construction trestle had to be installed. The installation of this trestle was critical to allow construction of Section 4 along with future construction of the proposed roadway that had a hard completion date of March 31st, 2025. JB Coxwell is officially submitting this Request for Change Order # 21 in the amount of $114,662.81 for the labor and equipment that was necessary to install and remove the trestle. JBCCI respectfully asks that 10 days be added to the contract.

If you have any questions, please do not hesitate to contact me.

Respectfully,

**J. B. COXWELL CONTRACTING, INC.**

Garrett Harrison
Director of Structures

Docusign Envelope ID: F54DB230-A150-452A-B3F0-14C4A48C193C

# McCoy's Creek Channel Improvements

## Trestle Installation

Docusign Envelope ID: F54DB230-A150-452A-B3F0-14C4A48C193C

**J. B. COXWELL CONTRACTING, INC.**
6741 Lloyd Road West, Jacksonville, FL 32254-1249
Telephone (904) 786-1120 * Fax (904) 783-2970

## FORCE ACCOUNT
## DAILY TIME REPORT

NAME: Carl Padgett GAI Consultants
Date: October 31, 2024

MAILING ADDRESS: 12574 Flagler Center Blvd Suite 202
Our Job No.: 2335

CITY: Jacksonville, FL 32258
Location: Mccoy's Creek Channel Improvements

Installation of Trestle

Idle Equipment Rate Charged at 50% Blue Book Value

### LABOR

| EMP. NO. | | EMPLOYEE'S NAME | OCCUPATION | HOURS | RATE | AMOUNT |
|---|---|---|---|---|---|---|
| 1 | 6539 | Tim Spaeth | Crane Operator | 10.0 | $ 46.00 | $ 460.00 |
| 2 | 6386 | Vic Bazile | Pile Driving Foreman | 10.0 | $ 27.00 | $ 270.00 |
| 3 | 6611 | Jackson McNabb | Pile Driver/Welder | 10.0 | $ 22.00 | $ 220.00 |
| 4 | 6569 | Ryshawn White | Pile Driver/Welder | 10.0 | $ 23.00 | $ 230.00 |
| 5 | 6508 | Walky Jean | Pile Driver/Welder | 10.0 | $ 24.00 | $ 240.00 |
| 6 | | | | | | $ - |
| 7 | | | | | | $ - |
| 8 | | | | | | $ - |
| 9 | | | | | | $ - |
| 10 | | | | | | $ - |
| | | | | SUBTOTAL | | $ 1,420.00 |
| | | | | BURDEN (44.52%) | | $ 632.18 |
| | | | | JBCCI MU 15.0% | | $ 307.83 |
| | | | | LABOR TOTAL | | $ 2,360.01 |

### EQUIPMENT

| EQUIP. NO. | | TYPE OF EQUIPMENT | HOURS | RATE | AMOUNT |
|---|---|---|---|---|---|
| 1 | | Manitowoc Crawler Crane 100T | 10.0 | $ 585.22 | $ 5,852.20 |
| 2 | | F150 Superintendent Pickup truck | 10.0 | $ 45.36 | $ 453.60 |
| 3 | | PVE VM Vibratory Hammer | 10.0 | $ 207.89 | $ 2,078.90 |
| 4 | | Lincoln 500 Welding Machine | 10.0 | $ 11.43 | $ 114.30 |
| 5 | | | | | $ - |
| 6 | | | | | $ - |
| 7 | | | | | $ - |
| 8 | | | | | $ - |
| | | | | | |
| | | | | EQUIPMENT SUBTOTAL | $ 8,499.00 |
| | | | | JBCCI MU 15.0% | $ 1,274.85 |
| | | | | EQUIPMENT TOTAL | $ 9,773.85 |

### MATERIALS

| | DESCRIPTION | QUANTITY | UNIT | PRICE | AMOUNT |
|---|---|---|---|---|---|
| 1 | | | | | $ - |
| 2 | | | | | $ - |
| 3 | | | | | $ - |
| 4 | | | | | $ - |
| 5 | | | | | $ - |
| | | | | MATERIALS SUBTOTAL | $ - |
| | | | | Sales Tax (7.5%) | $ - |
| | | | | MATERIALS Mark Up (15.0%) | $ - |
| | | | | MATERIALS TOTAL | $ - |

### SUBCONTRACTORS

| | DESCRIPTION | QUANTITY | UNIT | PRICE | AMOUNT |
|---|---|---|---|---|---|
| 1 | | | | | $ - |
| | | | | SUBCONTRACTS SUBTOTAL | $ - |
| | | | | SUBCONTRACTS MU (10%) | $ - |
| | | | | SUBCONTRACTS TOTAL | $ - |

DESCRIPTION OF WORK: Installation of Trestle

| | | |
|---|---|---|
| SUBTOTAL | $ | 12,133.86 |
| 0.53% Bond | $ | 64.31 |
| **GRAND TOTAL** | **$** | **12,198.17** |

Report Submitted by: _____

Docusign Envelope ID: F54DB230-A150-452A-B3F0-14C4A48C193C

J. B. COXWELL CONTRACTING, INC.
6741 Lloyd Road West, Jacksonville, FL 32254-1249
Telephone (904) 786-1120 * Fax (904) 783-2970

**FORCE ACCOUNT**
**DAILY TIME REPORT**

NAME: Carl Padgett GAI Consultants
MAILING ADDRESS: 12574 Flagler Center Blvd Suite 202
CITY: Jacksonville, FL 32258

Date: November 1, 2024
Our Job No.: 2335
Location: Mccoy's Creek Channel Improvements

Installation of Trestle

Idle Equipment Rate Charged at 50% Blue Book Value

## LABOR

| EMP. NO. | | EMPLOYEE'S NAME | OCCUPATION | HOURS | RATE | AMOUNT |
|---|---|---|---|---|---|---|
| 1 | 5539 | Tim Spoeth | Crane Operator | 8.0 | $ 48.00 | $ 384.00 |
| 2 | 8386 | Vic Bazile | Pile Driving Foreman | 8.0 | $ 27.00 | $ 216.00 |
| 3 | 6511 | Jackson McNabb | Pile Driver/Welder | 8.0 | $ 22.00 | $ 176.00 |
| 4 | 6568 | Ryshawn White | Pile Driver/Welder | 8.0 | $ 23.00 | $ 184.00 |
| 5 | 6608 | Walky Jean | Pile Driver/Welder | 8.0 | $ 24.00 | $ 192.00 |
| 6 | | | | | | $ - |
| 7 | | | | | | $ - |
| 8 | | | | | | $ - |
| 9 | | | | | | $ - |
| 10 | | | | | | $ - |
| | | | | SUBTOTAL | | $ 1,136.00 |
| | | | | BURDEN (44.52%) | | $ 505.75 |
| | | | | JBCCI MU 15.0% | | $ 246.26 |
| | | | | LABOR TOTAL | | $ 1,888.01 |

## EQUIPMENT

| EQUIP. NO. | | TYPE OF EQUIPMENT | HOURS | RATE | AMOUNT |
|---|---|---|---|---|---|
| 1 | | Manitowoc Crawler Crane 100T | 8.0 | $ 586.22 | $ 4,691.76 |
| 2 | | F150 Superintendent Pickup truck | 8.0 | $ 45.36 | $ 362.88 |
| 3 | | PVE VM Vibratory hammer | 8.0 | $ 207.99 | $ 1,663.12 |
| 4 | | Lincoln 500 Welding Machine | 8.0 | $ 11.43 | $ 91.44 |
| 5 | | | | | $ - |
| 6 | | | | | $ - |
| 7 | | | | | $ - |
| 8 | | | | | $ - |
| | | | | | |
| | | | | EQUIPMENT SUBTOTAL | $ 6,799.20 |
| | | | | JBCCI MU 15.0% | $ 1,019.88 |
| | | | | EQUIPMENT TOTAL | $ 7,819.08 |

## MATERIALS

| | DESCRIPTION | QUANTITY | UNIT | PRICE | AMOUNT |
|---|---|---|---|---|---|
| 1 | | | | | $ - |
| 2 | | | | | $ - |
| 3 | | | | | $ - |
| 4 | | | | | $ - |
| 5 | | | | | $ - |
| | | | | MATERIALS SUBTOTAL | $ - |
| | | | | Sales Tax (7.5%) | $ - |
| | | | | MATERIALS Mark Up (15.0%) | $ - |
| | | | | MATERIALS TOTAL | $ - |

## SUBCONTRACTORS

| DESCRIPTION | QUANTITY | UNIT | PRICE | AMOUNT |
|---|---|---|---|---|
| 1 | | | | $ - |
| | | | SUBCONTRACTS SUBTOTAL | $ - |
| | | | SUBCONTRACTS MU (10%) | $ - |
| | | | SUBCONTRACTS TOTAL | $ - |

DESCRIPTION OF WORK: Installation of Trestle

| | | |
|---|---|---|
| SUBTOTAL | $ | 9,707.09 |
| 0.53% Bond | $ | 51.45 |
| **GRAND TOTAL** | **$** | **9,758.54** |

Report Submitted by: _____

Docusign Envelope ID: F54DB230-A150-452A-B3F0-14C4A48C193C

J. B. COXWELL CONTRACTING, INC.
6741 Lloyd Road West, Jacksonville, FL 32254-1249
Telephone (904) 786-1120 * Fax (904) 783-2970

**FORCE ACCOUNT**
**DAILY TIME REPORT**

NAME: Carl Padgett GAI Consultants
MAILING ADDRESS: 12574 Flagler Center Blvd Suite 202
CITY: Jacksonville, FL 32258

Date: November 4, 2024
Our Job No.: 2335
Location: Mccoy's Creek Channel Improvements

Installation of Trestle

Idle Equipment Rate Charged at 50% Blue Book Value

## LABOR

| EMP. NO. | | EMPLOYEE'S NAME | OCCUPATION | HOURS | RATE | AMOUNT |
|---|---|---|---|---|---|---|
| 1 | 6539 | Tim Spaeth | Crane Operator | 10.0 | $ 45.00 | $ 450.00 |
| 2 | 6366 | Vic Bazile | Pile Driving Foreman | 10.0 | $ 27.00 | $ 270.00 |
| 3 | 6611 | Jackson McNaab | Pile Driver/Welder | 10.0 | $ 22.00 | $ 220.00 |
| 4 | 5668 | Ryshawn White | Pile Driver/Welder | 10.0 | $ 23.00 | $ 230.00 |
| 5 | 6608 | Walky Jean | Pile Driver/Welder | 10.0 | $ 24.00 | $ 240.00 |
| 6 | | | | | | $ - |
| 7 | | | | | | $ - |
| 8 | | | | | | $ - |
| 9 | | | | | | $ - |
| 10 | | | | | | $ - |
| | | | | SUBTOTAL | | $ 1,420.00 |
| | | | | BURDEN (44.52%) | | $ 632.18 |
| | | | | JBCCI MU 15.0% | | $ 307.83 |
| | | | | LABOR TOTAL | | $ 2,360.01 |

## EQUIPMENT

| EQUIP. NO. | | TYPE OF EQUIPMENT | HOURS | RATE | AMOUNT |
|---|---|---|---|---|---|
| 1 | | Manitowoc Crawler Crane 100T | 10.0 | $ 585.22 | $ 5,852.20 |
| 2 | | F150 Superintendent Pickup truck | 10.0 | $ 45.36 | $ 453.60 |
| 3 | | PVE VM Vibratory Hammer | 10.0 | $ 207.88 | $ 2,078.80 |
| 4 | | Lincoln 500 Welding Machine | 10.0 | $ 11.43 | $ 114.30 |
| 5 | | | | | $ - |
| 6 | | | | | $ - |
| 7 | | | | | $ - |
| 8 | | | | | $ - |
| | | | | | |
| | | | EQUIPMENT SUBTOTAL | | $ 8,499.00 |
| | | | JBCCI MU 15.0% | | $ 1,274.85 |
| | | | EQUIPMENT TOTAL | | $ 9,773.85 |

## MATERIALS

| | DESCRIPTION | QUANTITY | UNIT | PRICE | AMOUNT |
|---|---|---|---|---|---|
| 1 | | | | | $ - |
| 2 | | | | | $ - |
| 3 | | | | | $ - |
| 4 | | | | | $ - |
| 5 | | | | | $ - |
| | | | MATERIALS SUBTOTAL | | $ - |
| | | | Sales Tax (7.5%) | | $ - |
| | | | MATERIALS Mark Up (15.0%) | | $ - |
| | | | MATERIALS TOTAL | | $ - |

## SUBCONTRACTORS

| | DESCRIPTION | QUANTITY | UNIT | PRICE | AMOUNT |
|---|---|---|---|---|---|
| 1 | | | | | $ - |
| | | | SUBCONTRACTS SUBTOTAL | | $ - |
| | | | SUBCONTRACTS MU (10%) | | $ - |
| | | | SUBCONTRACTS TOTAL | | $ - |

DESCRIPTION OF WORK: Installation of Trestle

| | | |
|---|---|---|
| SUBTOTAL | $ | 12,133.86 |
| 0.53% Bond | $ | 64.31 |
| **GRAND TOTAL** | **$** | **12,198.17** |

Report Submitted by: _____

Docusign Envelope ID: F54DB230-A150-452A-B3F0-14C4A48C193C

**J. B. COXWELL CONTRACTING, INC.**
6741 Lloyd Road West, Jacksonville, FL 32254-1249
Telephone (904) 786-1120 * Fax (904) 783-2970

**FORCE ACCOUNT**
**DAILY TIME REPORT**

NAME: Carl Padgett GAI Consultants
MAILING ADDRESS: 12574 Flagler Center Blvd Suite 202
CITY: Jacksonville, FL 32258

Date: November 21, 2024
Our Job No.: 2335
Location: Mccoy's Creek Channel Improvements

Installation of Trestle

Idle Equipment Rate Charged at 50% Blue Book Value

## LABOR

| EMP. NO. | | EMPLOYEE'S NAME | OCCUPATION | HOURS | RATE | AMOUNT |
|---|---|---|---|---|---|---|
| 1 | 6539 | Tim Spaeth | Crane Operator | 10.0 | $ 46.00 | $ 460.00 |
| 2 | 6395 | Vic Bazile | Pile Driving Foreman | 10.0 | $ 27.00 | $ 270.00 |
| 3 | 6611 | Jackson McNabb | Pile Driver/Welder | 10.0 | $ 22.00 | $ 220.00 |
| 4 | 6558 | Ryshawn White | Pile Driver/Welder | 10.0 | $ 23.00 | $ 230.00 |
| 5 | 6608 | Walky Jean | Pile Driver/Welder | 10.0 | $ 24.00 | $ 240.00 |
| 6 | | | | | | $ - |
| 7 | | | | | | $ - |
| 8 | | | | | | $ - |
| 9 | | | | | | $ - |
| 10 | | | | | | $ - |
| | | | | SUBTOTAL | | $ 1,420.00 |
| | | | | BURDEN (44.52%) | | $ 632.18 |
| | | | | JBCCI MU 15.0% | | $ 307.83 |
| | | | | LABOR TOTAL | | $ 2,360.01 |

## EQUIPMENT

| EQUIP. NO. | | TYPE OF EQUIPMENT | HOURS | RATE | AMOUNT |
|---|---|---|---|---|---|
| 1 | | Manitowoc Crawler Crane 100T | 10.0 | $ 585.22 | $ 5,852.20 |
| 2 | | F150 Superintendent Pickup truck | 10.0 | $ 45.36 | $ 453.60 |
| 3 | | PVE VM Vibratory Hammer | 10.0 | $ 207.89 | $ 2,078.90 |
| 4 | | Lincoln 500 Welding Machine | 10.0 | $ 11.43 | $ 114.30 |
| 5 | | | | | $ - |
| 6 | | | | | $ - |
| 7 | | | | | $ - |
| 8 | | | | | $ - |
| | | | | | |
| | | | EQUIPMENT SUBTOTAL | | $ 8,499.00 |
| | | | JBCCI MU 15.0% | | $ 1,274.85 |
| | | | EQUIPMENT TOTAL | | $ 9,773.85 |

## MATERIALS

| DESCRIPTION | | QUANTITY | UNIT | PRICE | AMOUNT |
|---|---|---|---|---|---|
| 1 | | | | | $ - |
| 2 | | | | | $ - |
| 3 | | | | | $ - |
| 4 | | | | | $ - |
| 5 | | | | | $ - |
| | | | MATERIALS SUBTOTAL | | $ - |
| | | | Sales Tax (7.5%) | | $ - |
| | | | MATERIALS Mark Up (15.0%) | | $ - |
| | | | MATERIALS TOTAL | | $ - |

## SUBCONTRACTORS

| DESCRIPTION | | QUANTITY | UNIT | PRICE | AMOUNT |
|---|---|---|---|---|---|
| 1 | | | | | $ - |
| | | | SUBCONTRACTS SUBTOTAL | | $ - |
| | | | SUBCONTRACTS MU (10%) | | $ - |
| | | | SUBCONTRACTS TOTAL | | $ - |

DESCRIPTION OF WORK: Installation of Trestle

| | | |
|---|---|---|
| SUBTOTAL | $ | 12,133.86 |
| 0.53% Bond | $ | 64.31 |
| **GRAND TOTAL** | **$** | **12,198.17** |

Report Submitted by: _____

Docusign Envelope ID: F54DB230-A150-452A-B3F0-14C4A48C193C

J. B. COXWELL CONTRACTING, INC.
6741 Lloyd Road West, Jacksonville, FL 32254-1249
Telephone (904) 786-1120 * Fax (904) 783-2970

**FORCE ACCOUNT**
**DAILY TIME REPORT**

NAME: Carl Padgett GAI Consultants
MAILING ADDRESS: 12574 Flagler Center Blvd Suite 202
CITY: Jacksonville, FL 32258

Date: November 22, 2024
Our Job No.: 2335
Location: Mccoy's Creek Channel Improvements

Installation of Trestle

Idle Equipment Rate Charged at 50% Blue Book Value

## LABOR

| EMP. NO. | | EMPLOYEE'S NAME | OCCUPATION | HOURS | RATE | AMOUNT |
|---|---|---|---|---|---|---|
| 1 | 6539 | Tim Spaeth | Crane Operator | 8.0 | $ 46.00 | $ 368.00 |
| 2 | 6386 | Vic Bazile | Pile Driving Foreman | 8.0 | $ 27.00 | $ 216.00 |
| 3 | 6811 | Jackson McNabb | Pile Driver/Welder | 8.0 | $ 22.00 | $ 176.00 |
| 4 | 6568 | Ryshawn White | Pile Driver/Welder | 8.0 | $ 23.00 | $ 184.00 |
| 5 | 6608 | Walky Jean | Pile Driver/Welder | 8.0 | $ 24.00 | $ 192.00 |
| 6 | | | | | | $ - |
| 7 | | | | | | $ - |
| 8 | | | | | | $ - |
| 9 | | | | | | $ - |
| 10 | | | | | | $ - |
| | | | | SUBTOTAL | | $ 1,136.00 |
| | | | | BURDEN (44.52%) | | $ 505.75 |
| | | | | JBCCI MU 15.0% | | $ 246.26 |
| | | | | LABOR TOTAL | | $ 1,888.01 |

## EQUIPMENT

| EQUIP. NO. | | TYPE OF EQUIPMENT | HOURS | RATE | AMOUNT |
|---|---|---|---|---|---|
| 1 | | Manitowoc Crawler Crane 100T | 8.0 | $ 586.22 | $ 4,691.76 |
| 2 | | F150 Superintendent Pickup truck | 8.0 | $ 45.36 | $ 362.88 |
| 3 | | PVE VM Vibratory Hammer | 8.0 | $ 207.89 | $ 1,663.12 |
| 4 | | Lincoln 500 Welding Machine | 8.0 | $ 11.43 | $ 91.44 |
| 5 | | | | | $ - |
| 6 | | | | | $ - |
| 7 | | | | | $ - |
| 8 | | | | | $ - |
| | | | | EQUIPMENT SUBTOTAL | $ 6,799.20 |
| | | | | JBCCI MU 15.0% | $ 1,019.88 |
| | | | | EQUIPMENT TOTAL | $ 7,819.08 |

## MATERIALS

| | DESCRIPTION | QUANTITY | UNIT | PRICE | AMOUNT |
|---|---|---|---|---|---|
| 1 | | | | | $ - |
| 2 | | | | | $ - |
| 3 | | | | | $ - |
| 4 | | | | | $ - |
| 5 | | | | | $ - |
| | | | | MATERIALS SUBTOTAL | $ - |
| | | | | Sales Tax (7.5%) | $ - |
| | | | | MATERIALS Mark Up (15.0%) | $ - |
| | | | | MATERIALS TOTAL | $ - |

## SUBCONTRACTORS

| DESCRIPTION | QUANTITY | UNIT | PRICE | AMOUNT |
|---|---|---|---|---|
| 1 | | | | $ - |
| | | | SUBCONTRACTS SUBTOTAL | $ - |
| | | | SUBCONTRACTS MU (10%) | $ - |
| | | | SUBCONTRACTS TOTAL | $ - |

DESCRIPTION OF WORK: Installation of Trestle

| | | |
|---|---|---|
| SUBTOTAL | $ | 9,707.09 |
| 0.53% Bond | $ | 51.45 |
| **GRAND TOTAL** | **$** | **9,758.54** |

Report Submitted by: _____

Docusign Envelope ID: F54DB230-A150-452A-B3F0-14C4A48C193C

J. B. COXWELL CONTRACTING, INC.
6741 Lloyd Road West, Jacksonville, FL 32254-1249
Telephone (904) 786-1120 * Fax (904) 783-2970

**FORCE ACCOUNT**
**DAILY TIME REPORT**

NAME: Carl Padgett GAI Consultants
Date: November 23, 2024

MAILING ADDRESS: 12574 Flagler Center Blvd Suite 202
Our Job No.: 2335

CITY: Jacksonville, FL 32258
Location: Mccoy's Creek Channel Improvements

Installation of Trestle

Idle Equipment Rate Charged at 50% Blue Book Value

## LABOR

| EMP. NO. | | EMPLOYEE'S NAME | OCCUPATION | HOURS | RATE | AMOUNT |
|---|---|---|---|---|---|---|
| 1 | 6539 | Tim Spaeth | Crane Operator | 8.0 | $ 46.00 | $ 368.00 |
| 2 | 6385 | Vic Barrio | Pile Driving Foreman | 8.0 | $ 27.00 | $ 216.00 |
| 3 | 6611 | Jackson McNabb | Pile Driver/Welder | 8.0 | $ 22.00 | $ 176.00 |
| 4 | 6586 | Ryshawn White | Pile Driver/Welder | 8.0 | $ 23.00 | $ 184.00 |
| 5 | 6608 | Walky Jean | Pile Driver/Welder | 8.0 | $ 24.00 | $ 192.00 |
| 6 | | | | | | $ - |
| 7 | | | | | | $ - |
| 8 | | | | | | $ - |
| 9 | | | | | | $ - |
| 10 | | | | | | $ - |
| | | | | SUBTOTAL | | $ 1,136.00 |
| | | | | BURDEN (44.52%) | | $ 505.75 |
| | | | | JBCCI MU 15.0% | | $ 246.26 |
| | | | | LABOR TOTAL | | $ 1,888.01 |

## EQUIPMENT

| EQUIP. NO. | | TYPE OF EQUIPMENT | HOURS | RATE | AMOUNT |
|---|---|---|---|---|---|
| 1 | | Manitowoc Crawler Crane 100T | 8.0 | $ 585.22 | $ 4,681.76 |
| 2 | | F150 Superintendent Pickup truck | 8.0 | $ 45.36 | $ 362.88 |
| 3 | | PVE VM Vibratory Hammer | 8.0 | $ 207.89 | $ 1,663.12 |
| 4 | | Lincoln 500 Welding Machine | 8.0 | $ 11.43 | $ 91.44 |
| 5 | | | | | $ - |
| 6 | | | | | $ - |
| 7 | | | | | $ - |
| 8 | | | | | $ - |
| | | | | | |
| | | | | EQUIPMENT SUBTOTAL | $ 6,799.20 |
| | | | | JBCCI MU 15.0% | $ 1,019.88 |
| | | | | EQUIPMENT TOTAL | $ 7,819.08 |

## MATERIALS

| | DESCRIPTION | QUANTITY | UNIT | PRICE | AMOUNT |
|---|---|---|---|---|---|
| 1 | | | | | $ - |
| 2 | | | | | $ - |
| 3 | | | | | $ - |
| 4 | | | | | $ - |
| 5 | | | | | $ - |
| | | | | MATERIALS SUBTOTAL | $ - |
| | | | | Sales Tax (7.5%) | $ - |
| | | | | MATERIALS Mark Up (15.0%) | $ - |
| | | | | MATERIALS TOTAL | $ - |

## SUBCONTRACTORS

| | DESCRIPTION | QUANTITY | UNIT | PRICE | AMOUNT |
|---|---|---|---|---|---|
| 1 | | | | | $ - |
| | | | | SUBCONTRACTS SUBTOTAL | $ - |
| | | | | SUBCONTRACTS MU (10%) | $ - |
| | | | | SUBCONTRACTS TOTAL | $ - |

DESCRIPTION OF WORK: Installation of Trestle

| | | |
|---|---|---|
| SUBTOTAL | $ | 9,707.09 |
| 0.53% Bond | $ | 51.45 |
| **GRAND TOTAL** | **$** | **9,758.54** |

Report Submitted by: _____

Docusign Envelope ID: F54DB230-A150-452A-B3F0-14C4A48C193C

J. B. COXWELL CONTRACTING, INC.
6741 Lloyd Road West, Jacksonville, FL 32254-1249
Telephone (904) 786-1120 * Fax (904) 783-2970

**FORCE ACCOUNT**
**DAILY TIME REPORT**

NAME: Carl Padgett GAI Consultants
Date: November 25, 2024

MAILING ADDRESS: 12574 Flagler Center Blvd Suite 202
Our Job No.: 2335

CITY: Jacksonville, FL 32258
Location: Mccoy's Creek Channel Improvements

Installation of Trestle

Idle Equipment Rate Charged at 50% Blue Book Value

## LABOR

| EMP. NO. | | EMPLOYEE'S NAME | OCCUPATION | HOURS | RATE | AMOUNT |
|---|---|---|---|---|---|---|
| 1 | 8539 | Tim Spaeth | Crane Operator | 10.0 | $ 46.00 | $ 460.00 |
| 2 | 6356 | Vic Bazile | Pile Driving Foreman | 10.0 | $ 27.00 | $ 270.00 |
| 3 | 6611 | Jackson McNabb | Pile Driver/Welder | 10.0 | $ 22.00 | $ 220.00 |
| 4 | 6555 | Rysheem White | Pile Driver/Welder | 10.0 | $ 23.00 | $ 230.00 |
| 5 | 6508 | Walky Jean | Pile Driver/Welder | 10.0 | $ 24.00 | $ 240.00 |
| 6 | | - | | | | $ - |
| 7 | | | | | | $ - |
| 8 | | | | | | $ - |
| 9 | | | | | | $ - |
| 10 | | | | | | $ - |
| | | | | SUBTOTAL | | $ 1,420.00 |
| | | | | BURDEN (44.52%) | | $ 632.18 |
| | | | | JBCCI MU 15.0% | | $ 307.83 |
| | | | | LABOR TOTAL | | $ 2,360.01 |

## EQUIPMENT

| EQUIP. NO. | | TYPE OF EQUIPMENT | HOURS | RATE | AMOUNT |
|---|---|---|---|---|---|
| 1 | | Manitowoc Crawler Crane 100T | 10.0 | $ 565.22 | $ 5,652.20 |
| 2 | | F150 Superintendent Pickup Truck | 10.0 | $ 45.36 | $ 453.60 |
| 3 | | PVE VM Vibratory Hammer | 10.0 | $ 207.89 | $ 2,078.90 |
| 4 | | Lincoln 500 Welding Machine | 10.0 | $ 11.43 | $ 114.30 |
| 5 | | | | | $ - |
| 6 | | | | | $ - |
| 7 | | | | | $ - |
| 8 | | | | | $ - |
| | | | | | |
| | | | | EQUIPMENT SUBTOTAL | $ 8,499.00 |
| | | | | JBCCI MU 15.0% | $ 1,274.85 |
| | | | | EQUIPMENT TOTAL | $ 9,773.85 |

## MATERIALS

| | DESCRIPTION | QUANTITY | UNIT | PRICE | AMOUNT |
|---|---|---|---|---|---|
| 1 | | | | | $ - |
| 2 | | | | | $ - |
| 3 | | | | | $ - |
| 4 | | | | | $ - |
| 5 | | | | | $ - |
| | | | | MATERIALS SUBTOTAL | $ - |
| | | | | Sales Tax (7.5%) | $ - |
| | | | | MATERIALS Mark Up (15.0%) | $ - |
| | | | | MATERIALS TOTAL | $ - |

## SUBCONTRACTORS

| DESCRIPTION | QUANTITY | UNIT | PRICE | AMOUNT |
|---|---|---|---|---|
| 1 | | | | $ - |
| | | | SUBCONTRACTS SUBTOTAL | $ - |
| | | | SUBCONTRACTS MU (10%) | $ - |
| | | | SUBCONTRACTS TOTAL | $ - |

DESCRIPTION OF WORK: Installation of Trestle

| | | |
|---|---|---|
| SUBTOTAL | $ | 12,133.86 |
| 0.53% Bond | $ | 64.31 |
| **GRAND TOTAL** | **$** | **12,198.17** |

Report Submitted by: _____

Docusign Envelope ID: F54DB230-A150-452A-B3F0-14C4A48C193C

J. B. COXWELL CONTRACTING, INC.
6741 Lloyd Road West, Jacksonville, FL 32254-1249
Telephone (904) 786-1120 * Fax (904) 783-2970

**FORCE ACCOUNT**
**DAILY TIME REPORT**

NAME: Carl Padgett GAI Consultants
MAILING ADDRESS: 12574 Flagler Center Blvd Suite 202
CITY: Jacksonville, FL 32258

Date: November 26, 2024
Our Job No.: 2335
Location: Mccoy's Creek Channel Improvements

Installation of Trestle

Idle Equipment Rate Charged at 50% Blue Book Value

## LABOR

| EMP. NO. | | EMPLOYEE'S NAME | OCCUPATION | HOURS | RATE | AMOUNT |
|---|---|---|---|---|---|---|
| 1 | 6539 | Tim Spaeth | Crane Operator | 10.0 | $ 46.00 | $ 460.00 |
| 2 | 6386 | Vic Basile | Pile Driving Foreman | 10.0 | $ 27.00 | $ 270.00 |
| 3 | 6611 | Jackson McNabb | Pile Driver/Welder | 10.0 | $ 22.00 | $ 220.00 |
| 4 | 6569 | Ryshawn White | Pile Driver/Welder | 10.0 | $ 23.00 | $ 230.00 |
| 5 | 6808 | Walky Jean | Pile Driver/Welder | 10.0 | $ 24.00 | $ 240.00 |
| 6 | | | | | | $ - |
| 7 | | | | | | $ - |
| 8 | | | | | | $ - |
| 9 | | | | | | $ - |
| 10 | | | | | | $ - |
| | | | | SUBTOTAL | | $ 1,420.00 |
| | | | | BURDEN (44.52%) | | $ 632.16 |
| | | | | JBCCI MU 15.0% | | $ 307.85 |
| | | | | LABOR TOTAL | | $ 2,360.01 |

## EQUIPMENT

| EQUIP. NO. | | TYPE OF EQUIPMENT | HOURS | RATE | AMOUNT |
|---|---|---|---|---|---|
| 1 | | Manitowoc Crawler Crane 100T | 10.0 | $ 585.22 | $ 5,852.20 |
| 2 | | F150 Superintendent Pickup truck | 10.0 | $ 45.30 | $ 453.00 |
| 3 | | PVE VM Vibratory Hammer | 10.0 | $ 207.59 | $ 2,075.90 |
| 4 | | Lincoln 500 Welding Machine | 10.0 | $ 11.43 | $ 114.30 |
| 5 | | | | | $ - |
| 6 | | | | | $ - |
| 7 | | | | | $ - |
| 8 | | | | | $ - |
| | | | | | |
| | | | | EQUIPMENT SUBTOTAL | $ 8,499.00 |
| | | | | JBCCI MU 15.0% | $ 1,274.85 |
| | | | | EQUIPMENT TOTAL | $ 9,773.85 |

## MATERIALS

| | DESCRIPTION | QUANTITY | UNIT | PRICE | AMOUNT |
|---|---|---|---|---|---|
| 1 | | | | | $ - |
| 2 | | | | | $ - |
| 3 | | | | | $ - |
| 4 | | | | | $ - |
| 5 | | | | | $ - |
| | | | | MATERIALS SUBTOTAL | $ - |
| | | | | Sales Tax (7.5%) | $ - |
| | | | | MATERIALS Mark Up (15.0%) | $ - |
| | | | | MATERIALS TOTAL | $ - |

## SUBCONTRACTORS

| | DESCRIPTION | QUANTITY | UNIT | PRICE | AMOUNT |
|---|---|---|---|---|---|
| 1 | | | | | $ - |
| | | | | SUBCONTRACTS SUBTOTAL | $ - |
| | | | | SUBCONTRACTS MU (10%) | $ - |
| | | | | SUBCONTRACTS TOTAL | $ - |

DESCRIPTION OF WORK: Installation of Trestle

| | | |
|---|---|---|
| SUBTOTAL | $ | 12,133.86 |
| 0.53% Bond | $ | 64.31 |
| **GRAND TOTAL** | **$** | **12,198.17** |

Report Submitted by: _____

Docusign Envelope ID: F54DB230-A150-452A-B3F0-14C4A48C193C

J. B. COXWELL CONTRACTING, INC.
6741 Lloyd Road West, Jacksonville, FL 32254-1249
Telephone (904) 786-1120 * Fax (904) 783-2970

**FORCE ACCOUNT**
**DAILY TIME REPORT**

NAME: Carl Padgett GAI Consultants
MAILING ADDRESS: 12574 Flagler Center Blvd Suite 202
CITY: Jacksonville, FL 32258

Date: December 11, 2024
Our Job No.: 2335
Location: Mccoy's Creek Channel Improvements

Installation of Trestle

Idle Equipment Rate Charged at 60% Blue Book Value

## LABOR

| EMP. NO. | | EMPLOYEE'S NAME | OCCUPATION | HOURS | RATE | AMOUNT |
|---|---|---|---|---|---|---|
| 1 | 6539 | Tim Spaeth | Crane Operator | 10.0 | $ 46.00 | $ 460.00 |
| 2 | 6356 | Vic Basile | Pile Driving Foreman | 10.0 | $ 27.00 | $ 270.00 |
| 3 | 6611 | Jackson McNabb | Pile Driver/Welder | 10.0 | $ 22.00 | $ 220.00 |
| 4 | 6568 | Ryshawn White | Pile Driver/Welder | 10.0 | $ 23.00 | $ 230.00 |
| 5 | 6608 | Walky Jean | Pile Driver/Welder | 10.0 | $ 24.00 | $ 240.00 |
| 6 | | | | | | $ - |
| 7 | | | | | | $ - |
| 8 | | | | | | $ - |
| 9 | | | | | | $ - |
| 10 | | | | | | $ - |
| | | | | SUBTOTAL | | $ 1,420.00 |
| | | | | BURDEN (44.52%) | | $ 632.18 |
| | | | | JBCCI MU 15.0% | | $ 307.63 |
| | | | | LABOR TOTAL | | $ 2,360.01 |

## EQUIPMENT

| EQUIP. NO. | | TYPE OF EQUIPMENT | HOURS | RATE | AMOUNT |
|---|---|---|---|---|---|
| 1 | | Manitowoc Crawler Crane 2001 | 10.0 | $ 585.22 | $ 5,852.20 |
| 2 | | F150 Superintendent Pickup truck | 10.0 | $ 45.36 | $ 453.60 |
| 3 | | PVE VM Vibratory Hammer | 10.0 | $ 207.89 | $ 2,078.90 |
| 4 | | Lincoln 300 Welding Machine | 10.0 | $ 11.43 | $ 114.30 |
| 5 | | | | | $ - |
| 6 | | | | | $ - |
| 7 | | | | | $ - |
| 8 | | | | | $ - |
| | | | EQUIPMENT SUBTOTAL | | $ 8,499.00 |
| | | | JBCCI MU 15.0% | | $ 1,274.85 |
| | | | EQUIPMENT TOTAL | | $ 9,773.85 |

## MATERIALS

| | DESCRIPTION | QUANTITY | UNIT | PRICE | AMOUNT |
|---|---|---|---|---|---|
| 1 | | | | | $ - |
| 2 | | | | | $ - |
| 3 | | | | | $ - |
| 4 | | | | | $ - |
| 5 | | | | | $ - |
| | | | MATERIALS SUBTOTAL | | $ - |
| | | | Sales Tax (7.5%) | | $ - |
| | | | MATERIALS Mark Up (15.0%) | | $ - |
| | | | MATERIALS TOTAL | | $ - |

## SUBCONTRACTORS

| | DESCRIPTION | QUANTITY | UNIT | PRICE | AMOUNT |
|---|---|---|---|---|---|
| 1 | | | | | $ - |
| | | | SUBCONTRACTS SUBTOTAL | | $ - |
| | | | SUBCONTRACTS MU (10%) | | $ - |
| | | | SUBCONTRACTS TOTAL | | $ - |

DESCRIPTION OF WORK: Installation of Trestle

| | | |
|---|---|---|
| SUBTOTAL | $ | 12,133.86 |
| 0.53% Bond | $ | 64.31 |
| **GRAND TOTAL** | **$** | **12,198.17** |

Report Submitted by: _____

Docusign Envelope ID: F54DB230-A150-452A-B3F0-14C4A48C193C

**J. B. COXWELL CONTRACTING, INC.**
6741 Lloyd Road West, Jacksonville, FL 32254-1249
Telephone (904) 786-1120 * Fax (904) 763-2970

**FORCE ACCOUNT**
**DAILY TIME REPORT**

NAME: Carl Padgett GAI Consultants
MAILING ADDRESS: 12574 Flagler Center Blvd Suite 202
CITY: Jacksonville, FL 32258

Idle Equipment Rate Charged at 50% Blue Book Value

Date: December 12, 2024
Our Job No.: 2335
Location: Mccoy's Creek Channel Improvements

Installation of Trestle

## LABOR

| EMP. NO. | | EMPLOYEE'S NAME | OCCUPATION | HOURS | RATE | AMOUNT |
|---|---|---|---|---|---|---|
| 1 | 6539 | Tim Spaeth | Crane Operator | 10.0 | $ 46.00 | $ 460.00 |
| 2 | 6385 | Vic Bazile | Pile Driving Foreman | 10.0 | $ 27.00 | $ 270.00 |
| 3 | 6511 | Jackson McNabb | Pile Driver/Welder | 10.0 | $ 22.00 | $ 220.00 |
| 4 | 6568 | Rysnawn White | Pile Driver/Welder | 10.0 | $ 23.00 | $ 230.00 |
| 5 | 6608 | Walky Jean | Pile Driver/Welder | 10.0 | $ 24.00 | $ 240.00 |
| 6 | | | | | | $ - |
| 7 | | | | | | $ - |
| 8 | | | | | | $ - |
| 9 | | | | | | $ - |
| 10 | | | | | | $ - |
| | | | | SUBTOTAL | | $ 1,420.00 |
| | | | | BURDEN (44.52%) | | $ 632.18 |
| | | | | JBCCI MU 15.0% | | $ 307.83 |
| | | | | LABOR TOTAL | | $ 2,360.01 |

## EQUIPMENT

| EQUIP. NO. | | TYPE OF EQUIPMENT | HOURS | RATE | AMOUNT |
|---|---|---|---|---|---|
| 1 | | Manitowoc Crawler Crane 100T | 10.0 | $ 585.22 | $ 5,852.20 |
| 2 | | F150 Superintendent Pickup Truck | 10.0 | $ 45.36 | $ 453.60 |
| 3 | | PVE VM Vibratory Hammer | 10.0 | $ 207.89 | $ 2,078.90 |
| 4 | | Lincoln 500 Welding Machine | 10.0 | $ 11.43 | $ 114.30 |
| 5 | | | | | $ - |
| 6 | | | | | $ - |
| 7 | | | | | $ - |
| 8 | | | | | $ - |
| | | | | | |
| | | | EQUIPMENT SUBTOTAL | | $ 8,499.00 |
| | | | JBCCI MU 15.0% | | $ 1,274.85 |
| | | | EQUIPMENT TOTAL | | $ 9,773.85 |

## MATERIALS

| | DESCRIPTION | QUANTITY | UNIT | PRICE | AMOUNT |
|---|---|---|---|---|---|
| 1 | | | | | $ - |
| 2 | | | | | $ - |
| 3 | | | | | $ - |
| 4 | | | | | $ - |
| 5 | | | | | $ - |
| | | | MATERIALS SUBTOTAL | | $ - |
| | | | Sales Tax (7.5%) | | $ - |
| | | | MATERIALS Mark Up (15.0%) | | $ - |
| | | | MATERIALS TOTAL | | $ - |

## SUBCONTRACTORS

| | DESCRIPTION | QUANTITY | UNIT | PRICE | AMOUNT |
|---|---|---|---|---|---|
| 1 | | | | | $ - |
| | | | SUBCONTRACTS SUBTOTAL | | $ - |
| | | | SUBCONTRACTS MU (10%) | | $ - |
| | | | SUBCONTRACTS TOTAL | | $ - |

DESCRIPTION OF WORK: Installation of Trestle

| | | |
|---|---|---|
| SUBTOTAL | $ | 12,133.86 |
| 0.53% Bond | $ | 64.31 |
| **GRAND TOTAL** | **$** | **12,198.17** |

Report Submitted by: _____

Docusign Envelope ID: F54DB230-A150-452A-B3F0-14C4A48C193C

# CITY OF JACKSONVILLE
# CONTRACTOR'S DAILY REPORT

**CONTRACTOR:** J.B. Coxwell Inc. **Date:** 10-31-24

Superintendent: Scott Brunette Weather:

Job Site: McCoy's Creek #2325 *Temp: A.M.* 62 * P.M. *84

Job Safety: Hard hats,vest,,glasses

Deficiencies/Delays

| | |
|---|---|
| **Supr.** | 2 |
| **Foreman** | 2 |
| **Carpenter** | 12 |
| **Pipe layer** | |
| **Tail man** | |
| **Hillman** | |
| **Finisher** | |
| **Welder** | 2 |
| **Pile Driver** | 2 |
| **Op. Loader** | |
| ***Op.TrackHoe*** | |
| ***Survey*** | |
| ***Laborer*** | 2 |
| **OP. Crane** | 4 |
| **Rod Busters** | |

Comments:

Work In Progress:

Formed right wall in section 1, set rebar and burn holes in sheets for rebar in bottom of cap

Installed pipe pile in section 4 for trestle

Inspector Comments:

Scott Brunette

**CONTRACTOR** **INSPECTOR**

Docusign Envelope ID: F54DB230-A150-452A-B3F0-14C4A48C193C

# CITY OF JACKSONVILLE
# CONTRACTOR'S DAILY REPORT

**CONTRACTOR:** J.B. Coxwell Inc. **Date:** 11-1-24

Superintendent: Scott Brunette Weather:

Job Site: McCoy's Creek #2325 *Temp: A.M.* 65 * P.M. *84

Job Safety: Hard hats,vest,,glasses

| | |
|---|---|
| **Supr.** | 2 |
| **Foreman** | 2 |
| **Carpenter** | 12 |
| **Pipe layer** | |
| **Tail man** | |
| **Hillman** | |
| **Finisher** | |
| **Welder** | 2 |
| **Pile Driver** | 2 |
| **Op. Loader** | |
| ***Op.TrackHoe*** | |
| ***Survey*** | |
| ***Laborer*** | 2 |
| **OP. Crane** | 4 |
| **Rod Busters** | |

Deficiencies/Delays

Comments:

Work In Progress:

Formed on section 1 right wall, install rebar and burn holes in sheets for rebar cap

Installed pipe pile for trestle in section 4

Inspector Comments:

Scott Brunette

**CONTRACTOR** **INSPECTOR**

Docusign Envelope ID: F54DB230-A150-452A-B3F0-14C4A48C193C

# CITY OF JACKSONVILLE
# CONTRACTOR'S DAILY REPORT

**CONTRACTOR:** J.B. Coxwell Inc. **Date:** 11-4-24

Superintendent: Scott Brunette Weather:

Job Site: McCoy's Creek #2325 *Temp: A.M.* 70 * P.M. *81

Job Safety: Hard hats,vest,,glasses

| | |
|---|---|
| **Supr.** | 1 |
| **Foreman** | 2 |
| **Carpenter** | 12 |
| **Pipe layer** | |
| **Tail man** | |
| **Hillman** | |
| **Finisher** | |
| **Welder** | 6 |
| **Pile Driver** | 2 |
| **Op. Loader** | |
| ***Op.TrackHoe*** | |
| ***Survey*** | |
| ***Laborer*** | 2 |
| **OP. Crane** | 4 |
| **Rod Busters** | |

Deficiencies/Delays

Comments:

Work In Progress:

Formed right cap in section 1

Drove pipe pile for trestle to grade

Graded dirt on left wall in section 1

Built template for premanent bridge

Inspector Comments:

Scott Brunette

**CONTRACTOR** **INSPECTOR**

Docusign Envelope ID: F54DB230-A150-452A-B3F0-14C4A48C193C

# CITY OF JACKSONVILLE
# CONTRACTOR'S DAILY REPORT

**CONTRACTOR:** J.B. Coxwell Inc. **Date:** 11-21-24

Superintendent: Scott Brunette Weather:

Job Site: McCoy's Creek #2325 *Temp: A.M.* 44 * P.M. *65

Job Safety: Hard hats,vest,,glasses

| | |
|---|---|
| **Supr.** | 1 |
| **Foreman** | 2 |
| **Carpenter** | 7 |
| **Finisher** | |
| **Welder** | 2 |
| **Pile Driver** | 2 |
| ***Laborer*** | |
| **OP. Crane** | 1 |
| ***Survey*** | |
| **Rod Busters** | |

Deficiencies/Delays

Comments:

Work In Progress:

Formed cap on left wall in section 1

Stripped forms in section 1on left wall

Installed trestle in section 4

Inspector Comments:

Scott Brunette

**CONTRACTOR** **INSPECTOR**

Docusign Envelope ID: F54DB230-A150-452A-B3F0-14C4A48C193C

# CITY OF JACKSONVILLE
# CONTRACTOR'S DAILY REPORT

**CONTRACTOR:** J.B. Coxwell Inc. **Date:** 11-22-24

Superintendent: Scott Brunette Weather:

Job Site: McCoy's Creek #2325 *Temp: A.M.* 41* P.M. *63

Job Safety: Hard hats,vest,,glasses

| | |
|---|---|
| **Supr.** | 1 |
| **Foreman** | 1 |
| **Carpenter** | 4 |
| **Finisher** | |
| **Welder** | 2 |
| **Pile Driver** | 1 |
| ***Laborer*** | 1 |
| **OP. Crane** | 2 |
| ***Survey*** | |
| **Rod Busters** | |

Deficiencies/Delays

Comments:

Work In Progress:

Formed cap on left wall in section 1

Poured cap on left wall in section 1

Installed trestle in section 4

Inspector Comments:

Scott Brunette

**CONTRACTOR** **INSPECTOR**

Docusign Envelope ID: F54DB230-A150-452A-B3F0-14C4A48C193C

# CITY OF JACKSONVILLE
# CONTRACTOR'S DAILY REPORT

**CONTRACTOR:** J.B. Coxwell Inc. **Date:** 11-23-24

Superintendent: Scott Brunette Weather:

Job Site: McCoy's Creek #2325 *Temp: A.M.* 37 * P.M. *67

Job Safety: Hard hats,vest,,glasses

| | |
|---|---|
| **Supr.** | 1 |
| **Foreman** | |
| **Carpenter** | 6 |
| **Finisher** | |
| **Welder** | 2 |
| **Pile Driver** | 1 |
| ***Laborer*** | 1 |
| **OP. Crane** | 2 |
| ***Survey*** | |
| **Rod Busters** | |

Deficiencies/Delays

Comments:

Work In Progress:

Formed left wall in section 2

Stripped forms in section 1 on leeft wall

Installed tretsle in section 4

Inspector Comments:

Scott Brunette

**CONTRACTOR** **INSPECTOR**

Docusign Envelope ID: F54DB230-A150-452A-B3F0-14C4A48C193C

# CITY OF JACKSONVILLE
# CONTRACTOR'S DAILY REPORT

**CONTRACTOR:** J.B. Coxwell Inc. **Date:** 11-25-24

Superintendent: Scott Brunette Weather:

Job Site: McCoy's Creek #2325 *Temp: A.M.* 41 * P.M. *71

Job Safety: Hard hats,vest,,glasses

| | |
|---|---|
| **Supr.** | 1 |
| **Foreman** | |
| **Carpenter** | 6 |
| **Finisher** | |
| **Welder** | 2 |
| **Pile Driver** | 1 |
| ***Laborer*** | 1 |
| **OP. Crane** | 2 |
| ***Survey*** | |
| **Rod Busters** | |

Deficiencies/Delays

Comments:

Work In Progress:

Stripped forms from section 1 cap. cleaned area up removed forms from in section 1

Installed trestle in section 4. installed hand rail and crane mats

Formed on section 2 left wall at section 1. hung jacks on wall for back side of cap and deck it

Inspector Comments:

Scott Brunette

**CONTRACTOR** **INSPECTOR**

Docusign Envelope ID: F54DB230-A150-452A-B3F0-14C4A48C193C

# CITY OF JACKSONVILLE
# CONTRACTOR'S DAILY REPORT

**CONTRACTOR:** J.B. Coxwell Inc. **Date:** 11-26-24

Superintendent: Scott Brunette Weather:

Job Site: McCoy's Creek #2325 *Temp: A.M.* 47* P.M. * 77

Job Safety: Hard hats,vest,,glasses

| | |
|---|---|
| **Supr.** | 1 |
| **Foreman** | |
| **Carpenter** | 6 |
| **Finisher** | |
| **Welder** | 2 |
| **Pile Driver** | 1 |
| ***Laborer*** | 1 |
| **OP. Crane** | 2 |
| ***Survey*** | |
| **Rod Busters** | |

Deficiencies/Delays

Comments:

Work In Progress:

Formed left wall in section 2 at section 3

Build trestle in section 4

Inspector Comments:

Scott Brunette

**CONTRACTOR** **INSPECTOR**

Docusign Envelope ID: F54DB230-A150-452A-B3F0-14C4A48C193C

# CITY OF JACKSONVILLE
# CONTRACTOR'S DAILY REPORT

**CONTRACTOR:** J.B. Coxwell Inc. **Date:** 12-11-24

Superintendent: Scott Brunette Weather:

Job Site: McCoy's Creek #2325 *Temp: A.M.* 43 * P.M. *70

Job Safety: Hard hats,vest,,glasses

| | |
|---|---|
| **Supr.** | 1 |
| **Foreman** | 2 |
| **Carpenter** | 12 |
| **Finisher** | |
| **Welder** | 2 |
| **Pile Driver** | 1 |
| ***Laborer*** | 1 |
| **OP. Crane** | 3 |
| ***Survey*** | |
| **Rod Busters** | |

Deficiencies/Delays Surveyor was scheduled to be here today and he didnt show up. we have formed 2 section of wall that needs lay out for us to pour with him not showing up weve had to push concrete back by days

Comments:

Work In Progress:

Formed left wall in section 2

Formed right wall in section 2

Innstalled trestle in section 4

Inspector Comments:

Scott Brunette

**CONTRACTOR** **INSPECTOR**

Docusign Envelope ID: F54DB230-A150-452A-B3F0-14C4A48C193C

# CITY OF JACKSONVILLE
# CONTRACTOR'S DAILY REPORT

**CONTRACTOR:** J.B. Coxwell Inc. **Date:** 12-12-24

Superintendent: Scott Brunette Weather:

Job Site: McCoy's Creek #2325 *Temp: A.M.* 35 * P.M. *58

Job Safety: Hard hats,vest,,glasses

| | |
|---|---|
| **Supr.** | 1 |
| **Foreman** | 2 |
| **Carpenter** | 12 |
| **Finisher** | |
| **Welder** | 2 |
| **Pile Driver** | 1 |
| ***Laborer*** | 1 |
| **OP. Crane** | 3 |
| ***Survey*** | |
| **Rod Busters** | |

Deficiencies/Delays Surveyor came and shot grade on left wall iin section 2 and right wall in section 2 at section 3 for stairs was here all day to do so. Didnt have time to shoot in H-pile in section 4

Comments:

Work In Progress:

Formed left wall in section 2

Installed trestle in section 4

Inspector Comments:

Scott Brunette

**CONTRACTOR** **INSPECTOR**

Docusign Envelope ID: F54DB230-A150-452A-B3F0-14C4A48C193C

# CHANGE ORDER REQUEST #22

# MAY STREET MODIFICATIONS

# MCCOY'S CREEK OUTFALL REALIGNMENT

# APRIL 20, 2025

Docusign Envelope ID: F54DB230-A150-452A-B3F0-14C4A48C193C

# GAI ENTITLEMENT ANALYSIS

# CHANGE ORDER REQUEST #22

# MAY STREET MODIFICATIONS

# MCCOY'S CREEK OUTFALL REALIGNMENT

# APRIL 20, 2025

Docusign Envelope ID: F54DB230-A150-452A-B3F0-14C4A48C193C



**CHANGE ORDER REQUEST #22: Engineer's Entitlement Analysis for May St. Additional Drainage Pipe, Structures, and Excavatable Flowable Fill**

Job Description: McCoy's Creek Outfall Realignment
COJ Contract Number: 70646-23
April 20, 2025

**Summary**

JB Coxwell Construction Company, Inc. (JB Coxwell - "Contractor") was the successful Contractor selected to construct the above-mentioned project. JBCC furnished and installed an additional 32-feet of 24" RCP pipe, (5) additional curb inlets, HDPE pipe for scupper drains, as well as 120 cubic yards of excavatable flowable fill grout to encase the existing 36" Force Main underneath May St. as per plans, area was reduced as required by CDM Smith email dated 2-14-2025. This allowed the critical path items to proceed and keep the project on schedule along with meeting the hard date of the completion of May St. by March 31, 2025.

There **ARE** impacts to the critical path for this item. The Contractor is asking for $85,763.08 related to costs for furnishing and installing these items. The requested costs are summarized below.

| | Cost | Markup | Sales Tax (7.5%) | Total |
|---|---|---|---|---|
| Labor & Burden | $13,018.56 | $1,952.78 | N/A | $14,971.35 |
| Materials | $37,126.80 | $5,986.70 | $2,784.51 | $45,898.01 |
| Subcontractors | $5159.00 | $515.90 | N/A | $5,674.90 |
| Equipment | $16,318.84 | $2,447.83 | N/A | $18,766.67 |
| Bond (0.53%) | $452.15 | N/A | N/A | $452.15 |
| | | | | |
| | | | | |
| | | **TOTAL**** | | **$85,763.08** |

Entitlement has been found for the Contractor concerning money for the modifications that were required to complete the construction of May St. The Contractor is requesting $ 85,763.08 consideration for this amount is due to construction of May St., including drainage and meeting the date of completion.

**Description:**

Completion of May St. construction, including drainage, and required flowable fill for existing 36" Force Main.

**Entitlement Analysis:**

Compensation is in accordance with Division 3 COJ General Conditions Section 20.34.

**COJ Participation:** $85,763.08.

**Engineer's Estimate: Overall Cost:**

Labor, equipment, materials, subcontractors, and applicable mark-ups were necessary outlined in the Division 3 COJ General Conditions Section 20.34.2.2. The contractor's price of $ 85,763.08 compared favorably with GAI's Engineer's Estimate of $ 85,763.07

Docusign Envelope ID: F54DB230-A150-452A-B3F0-14C4A48C193C



The Delta is 0.01.

**Premium Cost Analysis:**

No premium cost associated with this issue. Costs are based on labor and equipment.

Revised Plan Sheet Nos.- **N/A**
Design Error or Omission: - **NO**

Docusign Envelope ID: F54DB230-A150-452A-B3F0-14C4A48C193C

# GAI ENGINEER'S ESTIMATE

# CHANGE ORDER REQUEST #22

# MAY STREET MODIFICATIONS

# MCCOY'S CREEK OUTFALL REALIGNMENT

# APRIL 20, 2025

| p | p |
|---|---|
| 9 | 9 |
| 10 | 10 |
| 7 | 7 |
| 6 | 6 |
| 3 | 5 |
| 2 | 37 |
| 5 | |
| 42 | |

**ENGINEER'S ESTIMATE OF EXTRA WORK**
**PROJECT**: MCOY'S CREEK OUTFALL REALIGNMENT
**COJ CONTRACT NO.:** 70646-23
**CHANGE ORDER NO.: 22**
**ISSUE:** May St. additional Drainage Pipe, Structures, and Excavatable Flowable Fill
**DATE**: April 20, 2025

gai consultants
transforming ideas into reality

**LABOR**

| JB COXWELL | | | | | | | |
|---|---|---|---|---|---|---|---|
| **POSITION** | **QTY.** | **UNIT** | **RATE** | **BURDENED RATE** | **EXTENDED COST** | **AMOUNT** | **COMMENT** |
| Superintendent-Vargas | 48 | Hours | $ 54.63 | | | $ 2,622.24 | Regular Time |
| Pipe Foreman-Ware | 5 | Hours | $ 37.00 | | | $ 185.00 | Regular Time |
| Pipe Layer-Batten | 5 | Hours | $ 22.00 | | | $ 110.00 | Regular Time |
| Excavator Operator-Simmons | 5 | Hours | $ 26.00 | | | $ 130.00 | Regular Time |
| Loader Operator-Smith | 5 | Hours | $ 18.50 | | | $ 92.50 | Regular Time |
| Pipe Foreman-Delcid | 68 | Hours | $ 27.00 | | | $ 1,836.00 | |
| Loader Operator-Gutierrez | 68 | Hours | $ 20.80 | | | $ 1,414.40 | |
| Excavator Operator-Dauphinais | 68 | Hours | $ 21.50 | | | $ 1,462.00 | |
| Laborer-Suarez | 68 | Hours | $ 17.00 | | | $ 1,156.00 | |
| | | | | | | $ 9,008.14 | |
| | | | | 44.52% | | $ 4,010.42 | |
| | | | Mark-Up | 15.00% | | $ 1,952.78 | |
| **LABOR TOTAL** | | | | | | **$ 14,971.35** | |

**EQUIPMENT**

| JB COXWELL | QTY. | UNIT | RATE | BURDENED RATE | EXTENDED COST | AMOUNT | COMMENT |
|---|---|---|---|---|---|---|---|
| Front End Loader | 73 | HRS. | $ 76.58 | | | $ 5,590.34 | |
| F-150 - Super pick up | 48 | HRS. | $ 45.36 | | | $ 2,177.28 | |
| CAT 336 Excavator | 73 | HRS. | $ 117.14 | | | $ 8,551.22 | |
| | | | Mark-Up | 15.00% | | $ 2,447.83 | |
| | | | | | | **$ 18,766.67** | |

**MATERIALS**

| JB COXWELL | PAY ITEM NUMBER | UNIT | | QUANTITY | UNIT PRICE | AMOUNT | COMMENT |
|---|---|---|---|---|---|---|---|
| 24" Reinforced Concrete Pipe | | L.F. | | 32 | $55.80 | **$1,785.60** | |
| HDPE Pipe | | L.S. | | | $4,405.20 | **$4,405.20** | |
| Precast Structures | | L.S. | | | $12,390.00 | **$12,390.00** | |
| Excavatable Flowable Fill | | C.Y. | | 120 | $154.55 | **$18,546.00** | |
| | | | Sales Tax | 7.50% | | $ 2,784.51 | |
| | | | Mark-Up | 15.00% | | $ 5,986.70 | |
| **MATERIALS TOTAL** | | | | | | **$45,898.01** | |

**SUBCONTRACTORS**

| JB COXWELL | PAY ITEM NUMBER | UNIT | | QUANTITY | UNIT PRICE | AMOUNT | COMMENT: |
|---|---|---|---|---|---|---|---|
| Concrete Cutting and Breaking | | L.S. | | | $1,275.00 | **$1,275.00** | |
| Rogers Pavement Maintenance | | L.S. | | | $3,884.00 | **$3,884.00** | |
| | | | Mark-Up | 10.00% | | $515.90 | |
| **Total** | | | | | | **$5,674.90** | |
| **SUBTOTAL** | | | | | | **$ 85,310.92** | |
| **SUBTOTAL COST ESTIMATE** | | | | | | ***$ 85,310.92*** | |
| **BOND** | | | 0.53% | | | ***$ 452.15*** | |
| **TOTAL COST ESTIMATE** | | | | | | ***$85,763.07*** | |
| Prepared By: | | | | | | | |
| J.Carlton Padgett Jr. E.I., CGC | 4/20/2025 | | | | | | |
| Project Administrator | Date | | | | | | |
| GAI Consultants Inc. | | | | | | | |
| **JB Coxwell Price Quote** | | | | | | **$85,763.08** | |
| **GAI Engineer's Estimate** | | | | | | **$85,763.07** | |
| **DELTA** | | | | | | **$ 0.01** | **0%** |



Docusign Envelope ID: F54DB230-A150-452A-B3F0-14C4A48C193C

Docusign Envelope ID: F54DB230-A150-452A-B3F0-14C4A48C193C

# CONTRACTOR'S DOCUMENTATION

# CHANGE ORDER REQUEST #22

# MAY STREET MODIFICATIONS

# MCCOY'S CREEK OUTFALL REALIGNMENT

# APRIL 20, 2025

Docusign Envelope ID: F54DB230-A150-452A-B3F0-14C4A48C193C

**J.B. Coxwell Contracting, Inc.**
6741 Lloyd Road West
Jacksonville, Florida 32254
Office (904) 786-1120 Fax (904) 783-2970

April 2, 2025

McCoy's Creek Channel Improvements
May St Additional Drainage Pipe, Structures, and Grout

Carl Padgett
GAI Consultants
12574 Flagler Center Blvd
Suite 202
Jacksonville, FL 32258

Project Name: McCoy's Creek Channel Improvements
County: Duval
COJ Contract #: 70646-23
Re: May St Additional Drainage Pipe, Structures, and Grout

Dear Mr. Padgett:

JBCCI is requesting $85,763.08 for the required additional drainage structures incorporated into May St. These changes included furnishing and installation of additional 24" RCP pipe, precast concrete drainage structures, HDPE pipe for scupper drains, and Flowable fill grout for the 36" FM underneath May St.

If you have any questions, please do not hesitate to contact me.

Respectfully,

**J. B. COXWELL CONTRACTING, INC.**

Garrett Harrison
Director of Structures

Docusign Envelope ID: F54DB230-A150-452A-B3F0-14C4A48C193C

**J. B. COXWELL CONTRACTING, INC.**
6741 Lloyd Road West, Jacksonville, FL 32254-1249
Telephone (904) 786-1120 * Fax (904) 783-2970

**FORCE ACCOUNT**
**DAILY TIME REPORT**

NAME: Carl Padgett GAI Consultants
Date: January 7, 2025

MAILING ADDRESS: 12574 Flagler Center Blvd Suite 202
Our Job No.: 2335

CITY: Jacksonville, FL 32258
Location: Mccoy's Creek Channel Improvements

Purchase and Installation of Additional Drainage Structures and piping

Idle Equipment Rate Charged at 50% Blue Book Value

## LABOR

| EMP. NO. | | EMPLOYEE'S NAME | OCCUPATION | HOURS | RATE | AMOUNT |
|---|---|---|---|---|---|---|
| 1 | 1527 | Jaimie Vargas | Superintendent | 5.0 | $ 54.83 | $ 274.15 |
| 2 | 8829 | Josh Ware | Pipe Foreman | 5.0 | $ 37.00 | $ 185.00 |
| 3 | 8831 | Zakary Batten | Pipe Layer | 5.0 | $ 22.00 | $ 110.00 |
| 4 | 8837 | Mason Simmons | Excavator Operator | 5.0 | $ 26.00 | $ 130.00 |
| 5 | 8871 | Alexander Smith | Loader Operator | 5.0 | $ 18.50 | $ 92.50 |
| 6 | | | | | | $ - |
| 7 | | | | | | $ - |
| 8 | | | | | | $ - |
| 9 | | | | | | $ - |
| 10 | | | | | | $ - |
| | | | | SUBTOTAL | | $ 798.65 |
| | | | | BURDEN (44.52%) | | $ 352.00 |
| | | | | JBCCI MU 15.0% | | $ 171.40 |
| | | | | LABOR TOTAL | | $ 1,314.04 |

## EQUIPMENT

| EQUIP. NO. | | TYPE OF EQUIPMENT | HOURS | RATE | AMOUNT |
|---|---|---|---|---|---|
| 1 | Low 103 | Front End Loader | 5.0 | $ 76.58 | $ 382.90 |
| 2 | BHC 188 | Cat 336 Excavator | 5.0 | $ 117.14 | $ 585.70 |
| 3 | TKP 280 | F 150 Pick up Truck | 5.0 | $ 45.36 | $ 226.80 |
| 4 | | | | | $ - |
| 5 | | | | | $ - |
| 6 | | | | | $ - |
| 7 | | | | | $ - |
| 8 | | | | | $ - |
| | | | | | |
| | | | EQUIPMENT SUBTOTAL | | $ 1,195.40 |
| | | | JBCCI MU 15.0% | | $ 179.31 |
| | | | EQUIPMENT TOTAL | | $ 1,374.71 |

## MATERIALS

| | DESCRIPTION | QUANTITY | UNIT | PRICE | AMOUNT |
|---|---|---|---|---|---|
| 1 | Reinforced 24" Concrete Pipe( Additional Footage) | 32.00 | LF | $ 55.80 | $ 1,785.60 |
| 2 | HDPE Pipe ( Ferguson) | 1.00 | LS | $ 4,405.20 | $ 4,405.20 |
| 3 | Precast Structures S ea | 1.00 | LS | $ 12,390.00 | $ 12,390.00 |
| 4 | Excavatable Grout | 120.00 | CY | $ 154.55 | $ 18,546.00 |
| 5 | | | | | $ - |
| | | | MATERIALS SUBTOTAL | | $ 37,126.80 |
| | | | Sales Tax (7.5%) | | $ 2,784.51 |
| | | | MATERIALS Mark Up (15.0%) | | $ 5,986.70 |
| | | | MATERIALS TOTAL | | $ 45,898.01 |

## SUBCONTRACTORS

| | DESCRIPTION | QUANTITY | UNIT | PRICE | AMOUNT |
|---|---|---|---|---|---|
| 1 | Conc Cutting and Breaking | 1.00 | EA | $ 1,275.00 | $ 1,275.00 |
| 2 | Rogers Pavement Maintenace | 1.00 | EA | $ 3,884.00 | $ 3,884.00 |
| | | | SUBCONTRACTS SUBTOTAL | | $ 5,159.00 |
| | | | SUBCONTRACTS MU (10%) | | $ 515.90 |
| | | | SUBCONTRACTS TOTAL | | $ 5,674.90 |

DESCRIPTION OF WORK: Purchase and Installation of Additional Drainage Structures and piping

| | | |
|---|---|---|
| SUBTOTAL | $ | 54,261.66 |
| 0.53% Bond | $ | 287.59 |
| **GRAND TOTAL** | **$** | **54,549.25** |

Report Submitted by: _____

Docusign Envelope ID: F54DB230-A150-452A-B3F0-14C4A48C193C

J. B. COXWELL CONTRACTING, INC.
6741 Lloyd Road West, Jacksonville, FL 32254-1249
Telephone (904) 786-1120 * Fax (904) 783-2970

**FORCE ACCOUNT**
**DAILY TIME REPORT**

NAME: Carl Padgett GAI Consultants
MAILING ADDRESS: 12574 Flagler Center Blvd Suite 202
CITY: Jacksonville, FL 32258

Date: January 8, 2025
Our Job No.: 2335
Location: Mccoy's Creek Channel Improvements

Purchase and Installation of Additional Drainage Structures and piping

Idle Equipment Rate Charged at 50% Blue Book Value

## LABOR

| EMP. NO. | | EMPLOYEE'S NAME | OCCUPATION | HOURS | RATE | AMOUNT |
|---|---|---|---|---|---|---|
| 1 | 1527 | Jaime Vargas | Superintendent | 5.0 | $ 54.63 | $ 273.15 |
| 2 | 5276 | William Dolcie | Pipe Foreman | 10.0 | $ 27.00 | $ 270.00 |
| 3 | 5852 | Andy Gutierrez | Loader Operator | 10.0 | $ 20.80 | $ 208.00 |
| 4 | 6172 | Coti Dauphiceais | Excavator Operator | 10.0 | $ 21.50 | $ 215.00 |
| 5 | 6365 | Daniel Suarez | Labor | 10.0 | $ 17.00 | $ 170.00 |
| 6 | | | | | | $ - |
| 7 | | | | | | $ - |
| 8 | | | | | | $ - |
| 9 | | | | | | $ - |
| 10 | | | | | | $ - |
| | | | | SUBTOTAL | | $ 1,136.15 |
| | | | | BURDEN (44.52%) | | $ 505.81 |
| | | | | JBCCI MU 15.8% | | $ 246.29 |
| | | | | LABOR TOTAL | | $ 1,888.26 |

## EQUIPMENT

| EQUIP. NO. | | TYPE OF EQUIPMENT | HOURS | RATE | AMOUNT |
|---|---|---|---|---|---|
| 1 | Low 103 | Front End Loader | 10.0 | $ 76.56 | $ 765.60 |
| 2 | BHC 186 | Cat 336 Excavator | 10.0 | $ 117.14 | $ 1,171.40 |
| 3 | TKP 280 | F 150 Pick up Truck | 5.0 | $ 45.36 | $ 226.80 |
| 4 | | | | | $ - |
| 5 | | | | | $ - |
| 6 | | | | | $ - |
| 7 | | | | | $ - |
| 8 | | | | | $ - |
| | | | | | |
| | | | EQUIPMENT SUBTOTAL | | $ 2,164.00 |
| | | | JBCCI MU 15.0% | | $ 324.60 |
| | | | EQUIPMENT TOTAL | | $ 2,488.60 |

## MATERIALS

| | DESCRIPTION | QUANTITY | UNIT | PRICE | AMOUNT |
|---|---|---|---|---|---|
| 1 | | | | | $ - |
| 2 | | | | | $ - |
| 3 | | | | | $ - |
| 4 | | | | | $ - |
| 5 | | | | | $ - |
| | | | MATERIALS SUBTOTAL | | $ - |
| | | | Sales Tax (7.5%) | | $ - |
| | | | MATERIALS Mark Up (15.0%) | | $ - |
| | | | MATERIALS TOTAL | | $ - |

## SUBCONTRACTORS

| | DESCRIPTION | QUANTITY | UNIT | PRICE | AMOUNT |
|---|---|---|---|---|---|
| 1 | | | | | $ - |
| | | | SUBCONTRACTS SUBTOTAL | | $ - |
| | | | SUBCONTRACTS MU (10%) | | $ - |
| | | | SUBCONTRACTS TOTAL | | $ - |

DESCRIPTION OF WORK: Purchase and Installation of Additional Drainage Structures and piping

| | | |
|---|---|---|
| SUBTOTAL | $ | 4,376.86 |
| 0.53% Bond | $ | 23.20 |
| **GRAND TOTAL** | **$** | **4,400.06** |

Report Submitted by: _____

Docusign Envelope ID: F54DB230-A150-452A-B3F0-14C4A48C193C

**J. B. COXWELL CONTRACTING, INC.**
6741 Lloyd Road West, Jacksonville, FL 32254-1249
Telephone (904) 786-1120 * Fax (904) 783-2970

**FORCE ACCOUNT**
**DAILY TIME REPORT**

NAME: Carl Padgett GAI Consultants
Date: January 9, 2025

MAILING ADDRESS: 12574 Flagler Center Blvd Suite 202
Our Job No.: 2335

CITY: Jacksonville, FL 32258
Location: Mccoy's Creek Channel Improvements

Purchase and Installation of Additional Drainage Structures and piping

Idle Equipment Rate Charged at 50% Blue Book Value

## LABOR

| EMP. NO. | | EMPLOYEE'S NAME | OCCUPATION | HOURS | RATE | AMOUNT |
|---|---|---|---|---|---|---|
| 1 | 1527 | Jaime Vargas | Superintendent | 5.0 | $ 54.63 | $ 273.15 |
| 2 | 5276 | William Deford | Pipe Foreman | 10.0 | $ 27.05 | $ 270.00 |
| 3 | 5852 | Andy Gutierrez | Loader Operator | 10.0 | $ 20.80 | $ 208.00 |
| 4 | 6172 | Colt Daughtrars | Excavator Operator | 10.0 | $ 21.50 | $ 215.00 |
| 5 | 5365 | Daniel Suarez | Labor | 10.0 | $ 17.00 | $ 170.00 |
| 6 | | | | | | $ - |
| 7 | | | | | | $ - |
| 8 | | | | | | $ - |
| 9 | | | | | | $ - |
| 10 | | | | | | $ - |
| | | | | SUBTOTAL | | $ 1,136.15 |
| | | | | BURDEN (44.52%) | | $ 505.81 |
| | | | | JBCCI MU 15.0% | | $ 246.29 |
| | | | | LABOR TOTAL | | $ 1,888.26 |

## EQUIPMENT

| EQUIP. NO. | | TYPE OF EQUIPMENT | HOURS | RATE | AMOUNT |
|---|---|---|---|---|---|
| 1 | Low 103 | Front End Loader | 10.0 | $ 76.58 | $ 765.80 |
| 2 | BHC 188 | Cat 336 Excavator | 10.0 | $ 117.14 | $ 1,171.40 |
| 3 | TKP 280 | F 150 Pick up Truck | 5.0 | $ 45.36 | $ 226.80 |
| 4 | | | | | $ - |
| 5 | | | | | $ - |
| 6 | | | | | $ - |
| 7 | | | | | $ - |
| 8 | | | | | $ |
| | | | EQUIPMENT SUBTOTAL | | $ 2,164.00 |
| | | | JBCCI MU 15.0% | | $ 324.60 |
| | | | EQUIPMENT TOTAL | | $ 2,488.60 |

## MATERIALS

| | DESCRIPTION | QUANTITY | UNIT | PRICE | AMOUNT |
|---|---|---|---|---|---|
| 1 | | | | | $ - |
| 2 | | | | | $ - |
| 3 | | | | | $ |
| 4 | | | | | $ - |
| 5 | | | | | $ - |
| | | | MATERIALS SUBTOTAL | | $ - |
| | | | Sales Tax (7.5%) | | $ - |
| | | | MATERIALS Mark Up (15.0%) | | $ - |
| | | | MATERIALS TOTAL | | $ - |

## SUBCONTRACTORS

| | DESCRIPTION | QUANTITY | UNIT | PRICE | AMOUNT |
|---|---|---|---|---|---|
| 1 | | | | | $ - |
| | | | SUBCONTRACTS SUBTOTAL | | $ - |
| | | | SUBCONTRACTS MU (10%) | | $ - |
| | | | SUBCONTRACTS TOTAL | | $ - |

DESCRIPTION OF WORK: Purchase and Installation of Additional Drainage Structures and piping

| | | |
|---|---|---|
| SUBTOTAL | $ | 4,376.86 |
| 0.53% Bond | $ | 23.20 |
| **GRAND TOTAL** | **$** | **4,400.06** |

Report Submitted by: _____

Docusign Envelope ID: F54DB230-A150-452A-B3F0-14C4A48C193C

J. B. COXWELL CONTRACTING, INC.
6741 Lloyd Road West, Jacksonville, FL 32254-1249
Telephone (904) 786-1120 * Fax (904) 783-2970

**FORCE ACCOUNT**
**DAILY TIME REPORT**

NAME: Cari Padgett GAI Consultants
Date: January 10, 2025

MAILING ADDRESS: 12574 Flagler Center Blvd Suite 202
Our Job No.: 2335

CITY: Jacksonville, FL 32258
Location: Mccoy's Creek Channel Improvements

Idle Equipment Rate Charged at 50% Blue Book Value

Purchase and Installation of Additional Drainage Structures and piping

## LABOR

| EMP. NO. | | EMPLOYEE'S NAME | OCCUPATION | HOURS | RATE | AMOUNT |
|---|---|---|---|---|---|---|
| 1 | 1527 | Jaime Vargas | Superintendent | 5.0 | $ 54.63 | $ 273.15 |
| 2 | 5276 | William Detcid | Pipe Foreman | 10.0 | $ 27.00 | $ 270.00 |
| 3 | 5652 | Andy Gutierrez | Loader Operator | 10.0 | $ 20.60 | $ 206.00 |
| 4 | 6172 | Colt Dauphinais | Excavator Operator | 10.0 | $ 21.50 | $ 215.00 |
| 5 | 6365 | Daniel Suarez | Labor | 10.0 | $ 17.00 | $ 170.00 |
| 6 | | | | | | $ - |
| 7 | | | | | | $ - |
| 8 | | | | | | $ - |
| 9 | | | | | | $ - |
| 10 | | | | | | $ - |
| | | | | SUBTOTAL | | $ 1,138.15 |
| | | | | BURDEN (44.52%) | | $ 505.81 |
| | | | | JBCCI MU 15.0% | | $ 246.29 |
| | | | | LABOR TOTAL | | $ 1,888.26 |

## EQUIPMENT

| EQUIP. NO. | | TYPE OF EQUIPMENT | HOURS | RATE | AMOUNT |
|---|---|---|---|---|---|
| 1 | Cpw 103 | Front End Loader | 10.0 | $ 76.58 | $ 765.80 |
| 2 | BHC 186 | Cat 336 Excavator | 10.0 | $ 117.14 | $ 1,171.40 |
| 3 | TKP 280 | F 150 Pick up Truck | 5.0 | $ 45.36 | $ 226.80 |
| 4 | | | | | $ - |
| 5 | | | | | $ |
| 6 | | | | | $ - |
| 7 | | | | | $ - |
| 8 | | | | | $ - |
| | | | | | |
| | | | EQUIPMENT SUBTOTAL | | $ 2,164.00 |
| | | | JBCCI MU 15.0% | | $ 324.60 |
| | | | EQUIPMENT TOTAL | | $ 2,488.60 |

## MATERIALS

| | DESCRIPTION | QUANTITY | UNIT | PRICE | AMOUNT |
|---|---|---|---|---|---|
| 1 | | | | | $ - |
| 2 | | | | | $ - |
| 3 | | | | | $ - |
| 4 | | | | | $ - |
| 5 | | | | | $ - |
| | | | MATERIALS SUBTOTAL | | $ - |
| | | | Sales Tax (7.5%) | | $ - |
| | | | MATERIALS Mark Up (15.0%) | | $ - |
| | | | MATERIALS TOTAL | | $ - |

## SUBCONTRACTORS

| | DESCRIPTION | QUANTITY | UNIT | PRICE | AMOUNT |
|---|---|---|---|---|---|
| 1 | | | | | $ - |
| | | | SUBCONTRACTS SUBTOTAL | | $ - |
| | | | SUBCONTRACTS MU (10%) | | $ - |
| | | | SUBCONTRACTS TOTAL | | $ - |

DESCRIPTION OF WORK: Purchase and Installation of Additional Drainage Structures and piping

| | | |
|---|---|---|
| SUBTOTAL | $ | 4,376.86 |
| 0.53% Bond | $ | 23.20 |
| **GRAND TOTAL** | **$** | **4,400.06** |

Report Submitted by: _____

Docusign Envelope ID: F54DB230-A150-452A-B3F0-14C4A48C193C

**J. B. COXWELL CONTRACTING, INC.**
6741 Lloyd Road West, Jacksonville, FL 32254-1249
Telephone (904) 786-1120 * Fax (904) 783-2970

**FORCE ACCOUNT**
**DAILY TIME REPORT**

NAME: Carl Padgett GAI Consultants
MAILING ADDRESS: 12574 Flagler Center Blvd Suite 202
CITY: Jacksonville, FL 32258

Date: January 16, 2025
Our Job No.: 2335
Location: Mccoy's Creek Channel Improvements

Purchase and Installation of Additional Drainage Structures and piping

Idle Equipment Rate Charged at 50% Blue Book Value

## LABOR

| EMP. NO. | | EMPLOYEE'S NAME | OCCUPATION | HOURS | RATE | AMOUNT |
|---|---|---|---|---|---|---|
| 1 | 1527 | Jamie Vargas | Superintendent | 5.0 | $ 54.63 | $ 273.15 |
| 2 | 5276 | William Gerald | Pipe Foreman | 10.0 | $ 27.00 | $ 270.00 |
| 3 | 5652 | Andy Gutierrez | Loader Operator | 10.0 | $ 20.80 | $ 208.00 |
| 4 | 6172 | Colt Dauphinais | Excavator Operator | 10.0 | $ 21.50 | $ 215.00 |
| 5 | 6365 | Daniel Suarez | Labor | 10.0 | $ 17.00 | $ 170.00 |
| 6 | | | | | | $ - |
| 7 | | | | | | $ - |
| 8 | | | | | | $ - |
| 9 | | | | | | $ - |
| 10 | | | | | | $ - |
| | | | | SUBTOTAL | | $ 1,136.15 |
| | | | | BURDEN (44.52%) | | $ 505.81 |
| | | | | JBCCI MU 15.8% | | $ 245.29 |
| | | | | LABOR TOTAL | | $ 1,888.25 |

## EQUIPMENT

| EQUIP. NO. | | TYPE OF EQUIPMENT | HOURS | RATE | AMOUNT |
|---|---|---|---|---|---|
| 1 | Low 103 | Front End Loader | 10.0 | $ 76.58 | $ 765.80 |
| 2 | BHC 188 | Cat 336 Excavator | 10.0 | $ 117.14 | $ 1,171.40 |
| 3 | TKP 280 | F 150 Pick up Truck | 5.0 | $ 45.36 | $ 226.80 |
| 4 | | | | | $ - |
| 5 | | | | | $ - |
| 6 | | | | | $ - |
| 7 | | | | | $ - |
| 8 | | | | | $ - |
| | | | | | |
| | | | EQUIPMENT SUBTOTAL | | $ 2,164.00 |
| | | | JBCCI MU 15.0% | | $ 324.60 |
| | | | EQUIPMENT TOTAL | | $ 2,488.60 |

## MATERIALS

| | DESCRIPTION | QUANTITY | UNIT | PRICE | AMOUNT |
|---|---|---|---|---|---|
| 1 | | | | | $ - |
| 2 | | | | | $ - |
| 3 | | | | | $ - |
| 4 | | | | | $ - |
| 5 | | | | | $ - |
| | | | MATERIALS SUBTOTAL | | $ - |
| | | | Sales Tax (7.5%) | | $ - |
| | | | MATERIALS Mark Up (15.0%) | | $ - |
| | | | MATERIALS TOTAL | | $ - |

## SUBCONTRACTORS

| | DESCRIPTION | QUANTITY | UNIT | PRICE | AMOUNT |
|---|---|---|---|---|---|
| 1 | | | | | $ - |
| | | | SUBCONTRACTS SUBTOTAL | | $ - |
| | | | SUBCONTRACTS MU (10%) | | $ - |
| | | | SUBCONTRACTS TOTAL | | $ - |

DESCRIPTION OF WORK: Purchase and Installation of Additional Drainage Structures and piping

| | | |
|---|---|---|
| SUBTOTAL | $ | 4,376.86 |
| 0.53% Bond | $ | 23.20 |
| **GRAND TOTAL** | **$** | **4,400.06** |

Report Submitted by: _____

Docusign Envelope ID: F54DB230-A150-452A-B3F0-14C4A48C193C

J. B. COXWELL CONTRACTING, INC.
6741 Lloyd Road West, Jacksonville, FL 32254-1249
Telephone (904) 786-1120 * Fax (904) 783-2970

**FORCE ACCOUNT**
**DAILY TIME REPORT**

NAME: Carl Padgett GAI Consultants
Date: February 1, 2025

MAILING ADDRESS: 12574 Flagler Center Blvd Suite 202
Our Job No.: 2335

CITY: Jacksonville, FL 32258
Location: Mccoy's Creek Channel Improvements

Idle Equipment Rate Charged at 50% Blue Book Value

Purchase and Installation of Additional Drainage Structures and piping

## LABOR

| EMP. NO. | | EMPLOYEE'S NAME | OCCUPATION | HOURS | RATE | AMOUNT |
|---|---|---|---|---|---|---|
| 1 | 1527 | Jamie Vargas | Superintendent | 5.0 | $ 54.63 | $ 273.15 |
| 2 | 5275 | William Dolcid | Pipe Foreman | 10.0 | $ 27.00 | $ 270.00 |
| 3 | 5852 | Andy Gutierrez | Loader Operator | 10.0 | $ 20.80 | $ 208.00 |
| 4 | 6172 | Colt Dauphinais | Excavator Operator | 10.0 | $ 21.50 | $ 215.00 |
| 5 | 6365 | Daniel Suarez | Labor | 10.0 | $ 17.00 | $ 170.00 |
| 6 | | | | | | $ - |
| 7 | | | | | | $ - |
| 8 | | | | | | $ - |
| 9 | | | | | | $ - |
| 10 | | | | | | $ - |
| | | | | SUBTOTAL | | $ 1,136.15 |
| | | | | BURDEN (44.52%) | | $ 505.61 |
| | | | | JBCCI MU 15.0% | | $ 246.29 |
| | | | | LABOR TOTAL | | $ 1,888.26 |

## EQUIPMENT

| EQUIP. NO. | | TYPE OF EQUIPMENT | HOURS | RATE | AMOUNT |
|---|---|---|---|---|---|
| 1 | Low 103 | Front End Loader | 10.0 | $ 76.58 | $ 765.80 |
| 2 | BRC 108 | Cat 336 Excavator | 10.0 | $ 117.14 | $ 1,171.40 |
| 3 | IKP 280 | F 150 Pick up Truck | 5.0 | $ 45.36 | $ 226.80 |
| 4 | | | | | $ - |
| 5 | | | | | $ - |
| 6 | | | | | $ - |
| 7 | | | | | $ - |
| 8 | | | | | $ - |
| | | | | | |
| | | | EQUIPMENT SUBTOTAL | | $ 2,164.00 |
| | | | JBCCI MU 15.0% | | $ 324.60 |
| | | | EQUIPMENT TOTAL | | $ 2,488.60 |

## MATERIALS

| | DESCRIPTION | QUANTITY | UNIT | PRICE | AMOUNT |
|---|---|---|---|---|---|
| 1 | | | | | $ - |
| 2 | | | | | $ - |
| 3 | | | | | $ - |
| 4 | | | | | $ - |
| 5 | | | | | $ - |
| | | | MATERIALS SUBTOTAL | | $ - |
| | | | Sales Tax (7.5%) | | $ - |
| | | | MATERIALS Mark Up (15.0%) | | $ - |
| | | | MATERIALS TOTAL | | $ - |

## SUBCONTRACTORS

| | DESCRIPTION | QUANTITY | UNIT | PRICE | AMOUNT |
|---|---|---|---|---|---|
| 1 | | | | | $ - |
| | | | SUBCONTRACTS SUBTOTAL | | $ - |
| | | | SUBCONTRACTS MU (10%) | | $ - |
| | | | SUBCONTRACTS TOTAL | | $ - |

DESCRIPTION OF WORK: Purchase and Installation of Additional Drainage Structures and piping

| | | |
|---|---|---|
| SUBTOTAL | $ | 4,376.86 |
| 0.53% Bond | $ | 23.20 |
| **GRAND TOTAL** | **$** | **4,400.06** |

Report Submitted by: _____

Docusign Envelope ID: F54DB230-A150-452A-B3F0-14C4A48C193C

J. B. COXWELL CONTRACTING, INC.
6741 Lloyd Road West, Jacksonville, FL 32254-1249
Telephone (904) 786-1120 * Fax (904) 783-2970

**FORCE ACCOUNT**
**DAILY TIME REPORT**

NAME: Carl Padgett GAI Consultants
MAILING ADDRESS: 12574 Flagler Center Blvd Suite 202
CITY: Jacksonville, FL 32258

Date: February 14, 2025
Our Job No.: 2335
Location: Mccoy's Creek Channel Improvements

Purchase and Installation of Additional Drainage Structures and piping

Idle Equipment Rate Charged at 50% Blue Book Value

## LABOR

| EMP. NO. | | EMPLOYEE'S NAME | OCCUPATION | HOURS | RATE | AMOUNT |
|---|---|---|---|---|---|---|
| 1 | 1527 | Jaimie Vargas | Superintendent | 4.0 | $ 54.63 | $ 218.52 |
| 2 | 5276 | William Deloe | Pipe Foreman | 4.0 | $ 27.00 | $ 108.00 |
| 3 | 5552 | Andy Gutierrez | Loader Operator | 4.0 | $ 20.80 | $ 83.20 |
| 4 | 6172 | Odi Obodimeis | Excavator Operator | 4.0 | $ 21.50 | $ 86.00 |
| 5 | 6365 | Daniel Suarez | Labor | 4.0 | $ 17.00 | $ 68.00 |
| 6 | | | | | | $ - |
| 7 | | | | | | $ - |
| 8 | | | | | | $ - |
| 9 | | | | | | $ - |
| 10 | | | | | | $ - |
| | | | | SUBTOTAL | | $ 563.72 |
| | | | | BURDEN (44.62%) | | $ 250.97 |
| | | | | JBCCI MU 15.0% | | $ 122.20 |
| | | | | LABOR TOTAL | | $ 936.89 |

## EQUIPMENT

| EQUIP. NO. | | TYPE OF EQUIPMENT | HOURS | RATE | AMOUNT |
|---|---|---|---|---|---|
| 1 | Low 169 | Front End Loader | 4.0 | $ 76.58 | $ 306.32 |
| 2 | BHC 188 | Cat 336 Excavator | 4.0 | $ 117.14 | $ 468.56 |
| 3 | TKP 260 | F 150 Pick up Truck | 4.0 | $ 45.36 | $ 181.44 |
| 4 | | | | | $ - |
| 5 | | | | | $ - |
| 6 | | | | | $ - |
| 7 | | | | | $ - |
| 8 | | | | | $ - |
| | | | | | |
| | | | EQUIPMENT SUBTOTAL | | $ 956.32 |
| | | | JBCCI MU 15.0% | | $ 143.45 |
| | | | EQUIPMENT TOTAL | | $ 1,099.77 |

## MATERIALS

| | DESCRIPTION | QUANTITY | UNIT | PRICE | AMOUNT |
|---|---|---|---|---|---|
| 1 | | | | | $ - |
| 2 | | | | | $ - |
| 3 | | | | | $ - |
| 4 | | | | | $ - |
| 5 | | | | | $ - |
| | | | MATERIALS SUBTOTAL | | $ - |
| | | | Sales Tax (7.5%) | | $ - |
| | | | MATERIALS Mark Up (15.0%) | | $ - |
| | | | MATERIALS TOTAL | | $ - |

## SUBCONTRACTORS

| | DESCRIPTION | QUANTITY | UNIT | PRICE | AMOUNT |
|---|---|---|---|---|---|
| 1 | | | | | $ - |
| | | | SUBCONTRACTS SUBTOTAL | | $ - |
| | | | SUBCONTRACTS MU (10%) | | $ - |
| | | | SUBCONTRACTS TOTAL | | $ - |

DESCRIPTION OF WORK: Purchase and Installation of Additional Drainage Structures and piping

| | | |
|---|---|---|
| SUBTOTAL | $ | 2,036.66 |
| 8.53% Bond | $ | 10.79 |
| **GRAND TOTAL** | **$** | **2,047.45** |

Report Submitted by: _____

Docusign Envelope ID: F54DB230-A150-452A-B3F0-14C4A48C193C

J. B. COXWELL CONTRACTING, INC.
6741 Lloyd Road West, Jacksonville, FL 32254-1249
Telephone (904) 786-1120 * Fax (904) 783-2970

**FORCE ACCOUNT**
**DAILY TIME REPORT**

NAME: Carl Padgett GAI Consultants
MAILING ADDRESS: 12574 Flagler Center Blvd Suite 202
CITY: Jacksonville, FL 32258

Date: February 15, 2025
Our Job No.: 2335
Location: Mccoy's Creek Channel Improvements

Purchase and Installation of Additional Drainage Structures and piping

Idle Equipment Rate Charged at 50% Blue Book Value

## LABOR

| EMP. NO. | | EMPLOYEE'S NAME | OCCUPATION | HOURS | RATE | AMOUNT |
|---|---|---|---|---|---|---|
| 1 | 1527 | Jaimie Vargas | Superintendent | 4.0 | $ 54.63 | $ 218.52 |
| 2 | 5276 | William Delcid | Pipe Foreman | 4.0 | $ 27.00 | $ 108.00 |
| 3 | 5052 | Andy Gutierrez | Loader Operator | 4.0 | $ 20.80 | $ 83.20 |
| 4 | 6172 | Colt Dauphinais | Excavator Operator | 4.0 | $ 21.50 | $ 86.00 |
| 5 | 6365 | Daniel Suarez | Labor | 4.0 | $ 17.00 | $ 68.00 |
| 6 | | | | | | $ - |
| 7 | | | | | | $ - |
| 8 | | | | | | $ - |
| 9 | | | | | | $ - |
| 10 | | | | | | $ - |
| | | | | SUBTOTAL | | $ 563.72 |
| | | | | BURDEN (44.52%) | | $ 250.97 |
| | | | | JBCCI MU 15.0% | | $ 122.20 |
| | | | | LABOR TOTAL | | $ 936.89 |

## EQUIPMENT

| EQUIP. NO. | | TYPE OF EQUIPMENT | HOURS | RATE | AMOUNT |
|---|---|---|---|---|---|
| 1 | Low 103 | Front End Loader | 4.0 | $ 76.58 | $ 306.32 |
| 2 | BHC 188 | Cat 336 Excavator | 4.0 | $ 117.14 | $ 468.56 |
| 3 | TKP 250 | F 150 Pick up Truck | 4.0 | $ 45.36 | $ 181.44 |
| 4 | | | | | $ - |
| 5 | | | | | $ - |
| 6 | | | | | $ - |
| 7 | | | | | $ - |
| 8 | | | | | $ - |
| | | | | | |
| | | | EQUIPMENT SUBTOTAL | | $ 956.32 |
| | | | JBCCI MU 15.0% | | $ 143.45 |
| | | | EQUIPMENT TOTAL | | $ 1,099.77 |

## MATERIALS

| | DESCRIPTION | QUANTITY | UNIT | PRICE | AMOUNT |
|---|---|---|---|---|---|
| 1 | | | | | $ - |
| 2 | | | | | $ - |
| 3 | | | | | $ - |
| 4 | | | | | $ - |
| 5 | | | | | $ - |
| | | | MATERIALS SUBTOTAL | | $ - |
| | | | Sales Tax (7.5%) | | $ - |
| | | | MATERIALS Mark Up (15.0%) | | $ - |
| | | | MATERIALS TOTAL | | $ - |

## SUBCONTRACTORS

| | DESCRIPTION | QUANTITY | UNIT | PRICE | AMOUNT |
|---|---|---|---|---|---|
| 1 | | | | | $ - |
| | | | SUBCONTRACTS SUBTOTAL | | $ - |
| | | | SUBCONTRACTS MU (10%) | | $ - |
| | | | SUBCONTRACTS TOTAL | | $ - |

DESCRIPTION OF WORK: Purchase and Installation of Additional Drainage Structures and piping

| | | |
|---|---|---|
| SUBTOTAL | $ | 2,036.66 |
| 0.53% Bond | $ | 10.79 |
| **GRAND TOTAL** | **$** | **2,047.45** |

Report Submitted by: _____

Docusign Envelope ID: F54DB230-A150-452A-B3F0-14C4A48C193C

**J. B. COXWELL CONTRACTING, INC.**
6741 Lloyd Road West, Jacksonville, FL 32254-1249
Telephone (904) 786-1120 * Fax (904) 783-2970

**FORCE ACCOUNT**
**DAILY TIME REPORT**

NAME: Carl Padgett GAI Consultants
MAILING ADDRESS: 12574 Flagler Center Blvd Suite 202
CITY: Jacksonville, FL 32258

Date: February 15, 2025
Our Job No.: 2335
Location: Mccoy's Creek Channel Improvements

Purchase and Installation of Additional Drainage Structures and piping

Idle Equipment Rate Charged at 50% Blue Book Value

## LABOR

| EMP. NO. | | EMPLOYEE'S NAME | OCCUPATION | HOURS | RATE | AMOUNT |
|---|---|---|---|---|---|---|
| 1 | 1527 | Jaime Vargas | Superintendent | 10.0 | $ 54.63 | $ 546.30 |
| 2 | 5276 | William Deloid | Pipe Foreman | 10.0 | $ 27.00 | $ 270.00 |
| 3 | 5852 | Andy Gutierrez | Loader Operator | 10.0 | $ 20.80 | $ 208.00 |
| 4 | 6172 | Colt Dauphinais | Excavator Operator | 10.0 | $ 21.50 | $ 215.00 |
| 5 | 6365 | Daniel Suarez | Labor | 10.0 | $ 17.00 | $ 170.00 |
| 6 | | | | | | $ - |
| 7 | | | | | | $ - |
| 8 | | | | | | $ - |
| 9 | | | | | | $ - |
| 10 | | | | | | $ - |
| | | | | SUBTOTAL | | $ 1,409.30 |
| | | | | BURDEN (44.52%) | | $ 627.42 |
| | | | | JBCCI MU 15.0% | | $ 305.51 |
| | | | | LABOR TOTAL | | $ 2,342.23 |

## EQUIPMENT

| EQUIP. NO. | | TYPE OF EQUIPMENT | HOURS | RATE | AMOUNT |
|---|---|---|---|---|---|
| 1 | Low 103 | Front End Loader | 10.0 | $ 76.58 | $ 765.80 |
| 2 | BHC 188 | Cat 336 Excavator | 10.0 | $ 117.14 | $ 1,171.40 |
| 3 | TKP 280 | F 150 Pick up Truck | 10.0 | $ 45.36 | $ 453.60 |
| 4 | | | | | $ - |
| 5 | | | | | $ - |
| 6 | | | | | $ - |
| 7 | | | | | $ - |
| 8 | | | | | $ - |
| | | | | | |
| | | | EQUIPMENT SUBTOTAL | | $ 2,390.80 |
| | | | JBCCI MU 15.0% | | $ 358.62 |
| | | | EQUIPMENT TOTAL | | $ 2,749.42 |

## MATERIALS

| | DESCRIPTION | QUANTITY | UNIT | PRICE | AMOUNT |
|---|---|---|---|---|---|
| 1 | | | | | $ - |
| 2 | | | | | $ - |
| 3 | | | | | $ |
| 4 | | | | | $ - |
| 5 | | | | | $ - |
| | | | MATERIALS SUBTOTAL | | $ - |
| | | | Sales Tax (7.5%) | | $ - |
| | | | MATERIALS Mark Up (15.0%) | | $ - |
| | | | MATERIALS TOTAL | | $ - |

## SUBCONTRACTORS

| | DESCRIPTION | QUANTITY | UNIT | PRICE | AMOUNT |
|---|---|---|---|---|---|
| 1 | | | | | $ - |
| | | | SUBCONTRACTS SUBTOTAL | | $ - |
| | | | SUBCONTRACTS MU (10%) | | $ - |
| | | | SUBCONTRACTS TOTAL | | $ - |

DESCRIPTION OF WORK: Purchase and Installation of Additional Drainage Structures and piping

| | | |
|---|---|---|
| SUBTOTAL | $ | 5,091.55 |
| 0.53% Bond | $ | 26.99 |
| **GRAND TOTAL** | **$** | **5,118.63** |

Report Submitted by: _____

Docusign Envelope ID: F54DB230-A150-452A-B3F0-14C4A48C193C

COUNTY MATERIALS CORPORATION

ASTATULA

25750 CR561
ASTATULA, FL 34705
Phone: (352)343-8488

# Quotation

| | | | | | | | |
|---|---|---|---|---|---|---|---|
| *Date:* | 9/10/2024 | *Bid Date:* | 6/26/2023 | *Time:* | 12:00 AM | *Project:* | 044-1944-23 | *Revision:* 0 |

| | | | |
|---|---|---|---|
| *Bid To:* | JB COXWELL | *Project Name:* | McCoys Creek Outfall Segment |
| *Contact:* | Garrett Harrison | *Project Address:* | |
| *Phone:* | (904)509-2472 | *City/State/County:* | Jacksonville, Florida, Duval |
| *Email:* | garretth@jbcoxwell.com | *Memo:* | |

*Quoted By:* Rick Bolinger *Cell:* (772)453-1103
*Email:* rick.bolinger@countymaterials.com

| Description | UOM | Qty | Unit Price | Extension |
|---|---|---|---|---|
| **ROUND PIPE** | | | | |
| 15" RCP CL3 | LF | 80.00 | $27.00 | $2,160.00 |
| 18" RCP CL3 | LF | 168.00 | $36.00 | $6,048.00 |
| 24" RCP CL3 | LF | 88.00 | $55.80 | $4,910.40 |
| **Net Price** | | | | **$13,118.40** |
| | | | | **$13,118.40** |

*MES BAR GRATES ARE AVAILABLE IN SINGLE, DOUBLE AND TRIPLE RUN, WITH OR WITHOUT BOLT FRAME. MES BAR GRATES ARE A SPECIAL ORDER ITEM, REQUIRE A MINIMUM OF 2 WEEKS PRODUCTION TIME, ARE NON-RETURNABLE AND NON-REFUNDABLE. CALL FOR MORE INFORMATION OR A QUOTE.

Material to be used for drainage

Clerical errors are subject to correction. All M.E.S. quoted as 4:1 slope unless otherwise noted. All quantities are rounded up to even joints.

PRICE & AVAILABILITY SUBJECT TO CHANGE AFTER 30 DAYS . All sales are subject to all applicable Sales Tax unless exempt tax status is provided prior to first shipment.

Prices quoted are FULL TRUCK LOAD QUANTITIES f.o.b. jobsite; TRUCK NEAR AS POSSIBLE TO JOBSITE UNDER OWN POWER. All ERCP and RCP will require off loading by customer. Subject to possible fuel surcharge. A minimum drop charge may apply on less than full truckload quantities.

A 30% restocking charge will be added to all returned items. ALL DESIGN/SPECIALTY ITEMS ARE NON RETURNABLE, NON REFUNDABLE, & REQUIRE A SIGNED ORDER OR PURCHASE ORDER.

Payment Terms: All invoices are due and payable by the end of the month following the month of purchase. Invoices not paid when due shall accrue interest at the rate of 1-1/2% per month (18% per annum).

Contract: This proposal when signed by Seller and Buyer constitutes a binding contract and is made for acceptance within thirty (30) days from date hereof unless used for bidding purposes, in which case it is for acceptance within thirty (30) days of the awarding of the contract. No other contract will be signed unless this quotation and its attached terms and conditions are made a part thereof. This bid is contingent upon successful negotiations of the contract for this project, between County Materials Corporation and the General Contractor / Contractor / Subcontractor.

Signature by Buyer, or Company PO, acknowledges acceptance of the terms and conditions attached. If Buyer fails to sign, the terms and conditions of this document shall become binding upon Seller's delivery or commencement of delivery. Any additional terms and conditions proposed by Buyer, whether written or verbal, are rejected and shall be of no force or effect unless expressly consented to in writing by the Seller.

County Materials

Seller

Buyer

Rick Bolinger - Sales Representative

Print Name & Title: Authorized Rep. For Seller

Print Name: Authorized Rep. For Buyer

Docusign Envelope ID: F54DB230-A150-452A-B3F0-14C4A48C193C

FERGUSON WATERWORKS

**FERGUSON WATERWORKS-JAX #149**
**9692 FLORIDA MINING BLVD W**
**BUILDING #100**
**JACKSONVILLE, FL 32257**
**Phone: 904-268-2551**
**Fax: 904-268-2053**

**Deliver To:** **ESTIMATING DEPT.**
**From:** **Ryan Pugh**
**ryan.pugh@ferguson.com**
**Comments:**

14:14:16 OCT 17 2024



FEL-JACKSONVILLE WW -#149
Price Quotation
Phone: 904-268-2551
Fax: 904-268-2053

**Bid No:** B624534
**Bid Date:** 10/17/24
**Quoted By:** RP

**Cust Phone:** 904-786-1120
**Terms:** NET 10TH PROX

**Customer:** J B COXWELL CONTRACTING INC
6741 LLOYD ROAD WEST
JACKSONVILLE, FL 32254-1249

**Ship To:** J B COXWELL CONTRACTING INC
6741 LLOYD ROAD WEST
JACKSONVILLE, FL 32254-1249

**Cust PO#:**

**Job Name:** MCCOYS DRAINAGE

| Item | Description | Quantity | Net Price | UM | Total |
|---|---|---|---|---|---|
| A08650020IB | 8X20 N12 COR W/TITE HDPE PIPE BE | 40 | 7.730 | FT | 309.20 |
| A15650020IBPL | 15X20 HP DW GRAY SLD PL PIPE | 120 | 20.790 | FT | 2494.80 |
| A24650020IBPL | 24X20 HP DW GRAY SLD PL PIPE | 40 | 40.030 | FT | 1601.20 |

| | |
|---|---|
| **Net Total:** | $4405.20 |
| **Tax:** | $330.39 |
| **Freight:** | $0.00 |
| **Total:** | $4735.59 |

Quoted prices are based upon receipt of the total quantity for immediate shipment (48 hours). SHIPMENTS BEYOND 48 HOURS SHALL BE AT THE PRICE IN EFFECT AT TIME OF SHIPMENT UNLESS NOTED OTHERWISE. QUOTES FOR PRODUCTS SHIPPED FOR RESALE ARE NOT FIRM UNLESS NOTED OTHERWISE.

CONTRACTOR CUSTOMERS: IF YOU HAVE DBE/MBE/WBE//VBE/SDVBE/SBE GOOD FAITH EFFORTS DIVERSITY GOALS/ REQUIREMENTS ON A FEDERAL, STATE, LOCAL GOVERNMENT, PRIVATE SECTOR PROJECT, PLEASE CONTACT YOUR BRANCH SALES REPRESENATIVE IMMEDIATELY PRIOR TO RECEIVING A QUOTE/ORDER.

Seller not responsible for delays, lack of product or increase of pricing due to causes beyond our control, and/or based upon Local, State and Federal laws governing type of products that can be sold or put into commerce. This Quote is offered contingent upon the Buyer's acceptance of Seller's terms and conditions, which are incorporated by reference and found either following this document, or on the web at https://www.ferguson.com/content/website-info/terms-of-sale
Govt Buyers: All items are open market unless noted otherwise.

LEAD LAW WARNING: It is illegal to install products that are not "lead free" in accordance with US Federal or other applicable law in potable water systems anticipated for human consumption. Products with *NP in the description are NOT lead free and can only be installed in non-potable applications. Buyer is solely responsible for product selection.

**HOW ARE WE DOING? WE WANT YOUR FEEDBACK!**
Scan the QR code or use the link below to complete a survey about your bids:
**https://survey.medallia.com/?bidsorder&fc=149&on=37090**

Docusign Envelope ID: F54DB230-A150-452A-B3F0-14C4A48C193C

AMERICAN PRECAST STRUCTURES
10483 GENERAL AVE.
JACKSONVILLE, FL 32220
904.467.7700/904.337.1967F

# REV 3 PURCHASE PROPOSAL

| | | | |
|---|---|---|---|
| Quote #: | Q23-2361 | Date: | 5/24/2023 |
| Project: | Mccoys Creek Outfall Improvements with Riverwalk | | |
| Engineer: | WM Waitz & Moye | | |
| Bid Date: | 5/24/2023 | Rev Date | 9/10/2024 |
| Location: | Duval | | |
| Company: | | | |
| Contact: | | | |
| Phone/Email: | | | |

| Quantity | | Description | Unit Price | Line Total |
|---|---|---|---|---|
| 6 | EA | 0-4' Curb Inlet w/ 5145-6210 Curb Set (3,4,4A,4C,5,7A) | $2,458 | $14,748 |
| 4 | EA | 4-6', as above (1,2,4B,6) | $2,508 | $10,032 |
| 1 | EA | 6-8' MH w/ 655-CF R&C (7) | $5,326 | $5,326 |
| 1 | EA | 20-22, as above (8) ***Depth to be Confirmed*** | $5,972 | $5,972 |
| | | | | $0 |
| | | | | $0 |
| | | | | $0 |
| | | | | $0 |
| | | | | $0 |
| | | | | $0 |
| | | | | $0 |
| | | | | $0 |
| | | | | $0 |
| | | | | $0 |
| | | | | $0 |
| | | | | $0 |
| | | | | $0 |
| | | | | $0 |
| | | | | $0 |
| | | | | $0 |
| | | | | $0 |
| | | | | $0 |
| | | | | $0 |
| | | | | $0 |

| | | |
|---|---|---|
| Subtotal | | $36,078 |
| Tax | 0.0% | $ - |
| Total | | $36,078.00 |
| FOB Jobsite | Unloaded By Others | |
| Lead Time | TBD | |
| Terms | NET 30 | |

**Quote valid for 30 days**

| Qualifications (Grade Rings Not Included) | |
|---|---|
| | **24" Dia Grade Rings @ $60/ea** |
| | **32" Dia Grade Rings @ $75/ea** |
| | **Curb Inlet Grade Rings @ $130/ea** |
| | **Any product not shipped within 6 months of submittal will be subject to price escalation and Storage Fees.** |

Quoted By: Bobby Smith / American Precast Structures, LLC
Bobby@American-PS.com

Quote Accepted By: _____
Date: _____

Docusign Envelope ID: F54DB230-A150-452A-B3F0-14C4A48C193C

No Delivery Ticket
Received From Field

TITAN FLORIDA
Materials for Life

# INVOICE

Titan Florida LLC
Attn: Accounts Receivable Dept
800 Fairway Drive #200
Deerfield Beach, FL 33441

| CUSTOMER I.D. | INVOICE DATE | INVOICE NUMBER |
|---|---|---|
| US51-1000034295 | 02/19/2025 | 3002403918 |

PAYMENT INQUIRIES: 800-330-3380
BILLING INQUIRIES: 800-204-0632

**We appreciate your business**

RECEIVED
MAR 19 REC'D
J. B. Coxwell Contracting, Inc.

**SOLD TO:**

COXWELL INC J B
6741 LLOYD RD W
JACKSONVILLE FL 32254-1249

**SHIP TO:**

PO#
DUVAL COUNTY
726 LEILA ST
JACKSONVILLE

| DATE MO | DATE DAY | TICKET NUMBER | MATERIAL NUMBER | DESCRIPTION | BILLING QUANTITY | BILLING U/M | BILLING UNIT PRICE | GROSS AMOUNT |
|---|---|---|---|---|---|---|---|---|
| | | | | R120 Greenland Road RMC Plant | | | | |
| 02 | 15 | 216173 | 1009335 | DF016400 FLOW FIL EXC (02-FF-1 | 10.00 | YD3 | 150.00 | 1,500.00 |
| 02 | 15 | 216173 | 98000303 | VARIABLE FUEL SURCHARGE | 1.00 | LD | 25.50 | 25.50 |
| 02 | 15 | 216173 | 98000442 | ENVIRON SURCHG | 1.00 | LD | 20.00 | 20.00 |
| 02 | 15 | 216175 | 1009335 | DF016400 FLOW FIL EXC (02-FF-1 | 10.00 | YD3 | 150.00 | 1,500.00 |
| 02 | 15 | 216175 | 98000303 | VARIABLE FUEL SURCHARGE | 1.00 | LD | 25.50 | 25.50 |
| 02 | 15 | 216175 | 98000442 | ENVIRON SURCHG | 1.00 | LD | 20.00 | 20.00 |
| | | | | PRODUCT RECAP | | | | |
| | | | 1009335 | DF016400 FLOW FIL EXC (02-FF-1 | 20.00 | | | |
| | | | 98000442 | ENVIRON SURCHG | 2.00 | | | |
| | | | 98000303 | VARIABLE FUEL SURCHARGE | 2.00 | | | |
| | | | | Net Total | | | | 3,091.00 |
| | | | | Sales Tax | | | | 231.82 |

**SAVE TIME AND MONEY WITH OUR FREE E-BILLING SERVICE**
Choose from three easy ways to receive your invoices: email, fax or Invoice Gateway, our secure online site. To sign up, contact 800-330-3380 or email us at creditservices@titanamerica.com As a reminder, if you receive any communication regarding method or logistics of payment from anyone purporting to be with Titan Florida or its related entities, please call the Credit Department immediately to verify. When paying by Wire or ACH, please send your remittance to: TitanFLRemittance@titanamerica.com

| | |
|---|---|
| ORDER # | 0040102047-5000099302 |
| SALES REP | JOHNNY WOODLE JR |
| ORDER INFO | Job# 40102047 |
| SHIP VIA | |
| SHIPPED FROM | Greenland Road RMC Plant |

**Our Corporate Values**
Safety
Integrity
Know-how
Value to the customer
Commit to and deliver results
Continuous improvement
Corporate social responsibility

| TOTAL QUANTITY |
|---|
| 20.00 |

| DISCOUNT | INVOICE TOTAL |
|---|---|
| 30.92 | 3322.82 |

| DISC DUE DATE | DUE DATE |
|---|---|
| 03/10/25 | 03/31/25 |

| CUSTOMER I.D. | INVOICE DATE | INVOICE NUMBER |
|---|---|---|
| US51-1000034295 | 02/19/2025 | 3002403918 |

**REMIT TO**
Titan Florida LLC
PO BOX 932622
ATLANTA, GA 31193-2622

**To ensure proper credit to your account, please designate all invoices being paid.**
Visit our web site at http://www.titanamerica.com/salesterms for terms and conditions
A service charge shall be imposed on invoices not paid in accordance with the standard terms, at the rate of 1.5% per month

| TO VIEW ONLINE GO TO: | http://titanamerica.billtrust.com | USE THIS ENROLLMENT CODE: | LKQ LQM MZR |
|---|---|---|---|

Docusign Envelope ID: F54DB230-A150-452A-B3F0-14C4A48C193C

TITAN FLORIDA
Materials for Life

# INVOICE

Titan Florida LLC
Attn: Accounts Receivable Dept
800 Fairway Drive #200
Deerfield Beach, FL 33441

| CUSTOMER I.D. | INVOICE DATE | INVOICE NUMBER |
|---|---|---|
| US51-1000034295 | 02/19/2025 | 3002403919 |

PAYMENT INQUIRIES: 800-330-3380
BILLING INQUIRIES: 800-204-0632

We appreciate your business

SOLD TO:

No Delivery Ticket
Received From Field

COXWELL INC J B
6741 LLOYD RD W
JACKSONVILLE FL 32254-1249

SHIP TO:

RECEIVED
MAR 19 REC'D
J. B. Coxwell Contracting, Inc.

PO#
DUVAL COUNTY
726 LEILA ST
JACKSONVILLE

| DATE MO | DATE DAY | TICKET NUMBER | MATERIAL NUMBER | DESCRIPTION | BILLING QUANTITY | BILLING U/M | BILLING UNIT PRICE | GROSS AMOUNT |
|---|---|---|---|---|---|---|---|---|
| | | | | R120 Greenland Road RMC Plant | | | | |
| 02 | 17 | 216192 | 1009335 | DF016400 FLOW FIL EXC (02-FF-1 | 10.00 | YD3 | 150.00 | 1,500.00 |
| 02 | 17 | 216192 | 98000303 | VARIABLE FUEL SURCHARGE | 1.00 | LD | 25.50 | 25.50 |
| 02 | 17 | 216192 | 98000442 | ENVIRON SURCHG | 1.00 | LD | 20.00 | 20.00 |
| 02 | 17 | 216193 | 1009335 | DF016400 FLOW FIL EXC (02-FF-1 | 10.00 | YD3 | 150.00 | 1,500.00 |
| 02 | 17 | 216193 | 98000303 | VARIABLE FUEL SURCHARGE | 1.00 | LD | 25.50 | 25.50 |
| 02 | 17 | 216193 | 98000442 | ENVIRON SURCHG | 1.00 | LD | 20.00 | 20.00 |
| 02 | 17 | 216194 | 1009335 | DF016400 FLOW FIL EXC (02-FF-1 | 10.00 | YD3 | 150.00 | 1,500.00 |
| 02 | 17 | 216194 | 98000303 | VARIABLE FUEL SURCHARGE | 1.00 | LD | 25.50 | 25.50 |
| 02 | 17 | 216194 | 98000442 | ENVIRON SURCHG | 1.00 | LD | 20.00 | 20.00 |
| 02 | 17 | 216195 | 1009335 | DF016400 FLOW FIL EXC (02-FF-1 | 10.00 | YD3 | 150.00 | 1,500.00 |
| 02 | 17 | 216195 | 98000303 | VARIABLE FUEL SURCHARGE | 1.00 | LD | 25.50 | 25.50 |
| 02 | 17 | 216195 | 98000442 | ENVIRON SURCHG | 1.00 | LD | 20.00 | 20.00 |
| 02 | 17 | 216196 | 1009335 | DF016400 FLOW FIL EXC (02-FF-1 | 10.00 | YD3 | 150.00 | 1,500.00 |
| 02 | 17 | 216196 | 98000303 | VARIABLE FUEL SURCHARGE | 1.00 | LD | 25.50 | 25.50 |
| 02 | 17 | 216196 | 98000442 | ENVIRON SURCHG | 1.00 | LD | 20.00 | 20.00 |
| 02 | 17 | 216197 | 1009335 | DF016400 FLOW FIL EXC (02-FF-1 | 10.00 | YD3 | 150.00 | 1,500.00 |
| 02 | 17 | 216197 | 98000303 | VARIABLE FUEL SURCHARGE | 1.00 | LD | 25.50 | 25.50 |
| 02 | 17 | 216197 | 98000442 | ENVIRON SURCHG | 1.00 | LD | 20.00 | 20.00 |
| 02 | 17 | 216198 | 1009335 | DF016400 FLOW FIL EXC (02-FF-1 | 10.00 | YD3 | 150.00 | 1,500.00 |
| 02 | 17 | 216198 | 98000303 | VARIABLE FUEL SURCHARGE | 1.00 | LD | 25.50 | 25.50 |
| 02 | 17 | 216198 | 98000442 | ENVIRON SURCHG | 1.00 | LD | 20.00 | 20.00 |
| 02 | 17 | 216199 | 1009335 | DF016400 FLOW FIL EXC (02-FF-1 | 10.00 | YD3 | 150.00 | 1,500.00 |
| 02 | 17 | 216199 | 98000303 | VARIABLE FUEL SURCHARGE | 1.00 | LD | 25.50 | 25.50 |
| 02 | 17 | 216199 | 98000442 | ENVIRON SURCHG | 1.00 | LD | 20.00 | 20.00 |
| 02 | 17 | 216200 | 1009335 | DF016400 FLOW FIL EXC (02-FF-1 | 10.00 | YD3 | 150.00 | 1,500.00 |
| 02 | 17 | 216200 | 98000303 | VARIABLE FUEL SURCHARGE | 1.00 | LD | 25.50 | 25.50 |
| 02 | 17 | 216200 | 98000442 | ENVIRON SURCHG | 1.00 | LD | 20.00 | 20.00 |
| 02 | 17 | 216201 | 1009335 | DF016400 FLOW FIL EXC (02-FF-1 | 10.00 | YD3 | 150.00 | 1,500.00 |
| 02 | 17 | 216201 | 98000303 | VARIABLE FUEL SURCHARGE | 1.00 | LD | 25.50 | 25.50 |
| 02 | 17 | 216201 | 98000442 | ENVIRON SURCHG | 1.00 | LD | 20.00 | 20.00 |
| | | | | PRODUCT RECAP | | | | |
| | | | 1009335 | DF016400 FLOW FIL EXC (02-FF-1 | 100.00 | | | |
| | | | 98000442 | ENVIRON SURCHG | 10.00 | | | |

Docusign Envelope ID: F54DB230-A150-452A-B3F0-14C4A48C193C

TITAN FLORIDA
Materials for Life

# INVOICE

Titan Florida LLC
Attn: Accounts Receivable Dept
800 Fairway Drive #200
Deerfield Beach, FL 33441

| CUSTOMER I.D. | INVOICE DATE | INVOICE NUMBER |
|---|---|---|
| US51-1000034295 | 02/19/2025 | 3002403919 |

PAYMENT INQUIRIES: 800-330-3380
BILLING INQUIRIES: 800-204-0632

**We appreciate your business**

SOLD TO:

COXWELL INC J B
6741 LLOYD RD W
JACKSONVILLE FL 32254-1249

SHIP TO:

PO#
DUVAL COUNTY
726 LEILA ST
JACKSONVILLE

| DATE MO | DATE DAY | TICKET NUMBER | MATERIAL NUMBER | DESCRIPTION | BILLING QUANTITY | BILLING U/M | BILLING UNIT PRICE | GROSS AMOUNT |
|---|---|---|---|---|---|---|---|---|
| | | | 98000303 | VARIABLE FUEL SURCHARGE | 10.00 | | | |
| | | | | Net Total | | | | 15,455.00 |
| | | | | Sales Tax | | | | 1,002.29 |

**SAVE TIME AND MONEY WITH OUR FREE E-BILLING SERVICE**
Choose from three easy ways to receive your invoices: email, fax or Invoice Gateway, our secure online site. To sign up, contact 800-330-3380 or email us at creditservices@titanamerica.com As a reminder, if you receive any communication regarding method or logistics of payment from anyone purporting to be with Titan Florida or its related entities, please call the Credit Department immediately to verify. When paying by Wire or ACH, please send your remittance to: TitanFLRemittance@titanamerica.com

| | |
|---|---|
| ORDER # | 0040102047-5000099302 |
| SALES REP | JOHNNY WOODLE JR |
| ORDER INFO | Job# 40102047 |
| SHIP VIA | |
| SHIPPED FROM | Greenland Road RMC Plant |

**Our Corporate Values**
Safety
Integrity
Know-how
Value to the customer
Commit to and deliver results
Continuous improvement
Corporate social responsibility

| TOTAL QUANTITY |
|---|
| 100.00 |

| DISCOUNT | INVOICE TOTAL |
|---|---|
| 154.60 | 16457.29 |

| DISC DUE DATE | DUE DATE |
|---|---|
| 03/10/25 | 03/31/25 |

| CUSTOMER I.D. | INVOICE DATE | INVOICE NUMBER |
|---|---|---|
| US51-1000034295 | 02/19/2025 | 3002403919 |

**REMIT TO**
Titan Florida LLC
PO BOX 932622
ATLANTA, GA 31193-2622

**To ensure proper credit to your account, please designate all invoices being paid.**
Visit our web site at http://www.titanamerica.com/salesterms for terms and conditions
A service charge shall be imposed on invoices not paid in accordance with the standard terms, at the rate of 1.5% per month

| TO VIEW ONLINE GO TO: | http://titanamerica.billtrust.com | USE THIS ENROLLMENT CODE: | LKQ LQM MZR |
|---|---|---|---|

Docusign Envelope ID: F54DB230-A150-452A-B3F0-14C4A48C193C

# Concrete Cutting & Breaking Co.

Corporate Office
4500 Airwest Drive SE
Grand Rapids, MI 49512
616-554-4876

RECEIVED
FEB 10 2025
J. B. Coxwell Contracting, Inc.

## Invoice

| | |
|---|---|
| Invoice No. | 63640-1-1 |
| Date | 1/23/2025 |
| Customer ID | COXWJBXJX |
| Office | Jacksonville Office |



| BILL TO: | Job Site Info: |
|---|---|
| JB COXWELL CONTRACTING | McCoy Creek Restoration |
| ATTN: AMANDA RICHARDSON-AP | Jamie |
| 6741 LLOYD ROAD WEST | 1 Riverside Ave |
| JACKSONVILLE, FL 32254 | Jacksonville, FL 32202 |
| | Work Done: 1/10/2025 thru 1/10/2025 |

| CUSTOMER P.O. NO. | JAMIE | CCB Job Number | 63640-1-1 |
|---|---|---|---|

| QUANTITY | DESCRIPTION | UNIT PRICE | EXT. PRICE |
|---|---|---|---|
| 1.00 | EA Core Drill Service Charge<br>Core drilled (1) 30" x 12" hole through concrete box culvert sidewall. | 1,275.00 | 1,275.00 |

| | |
|---|---|
| **Total $:** | 1,275.00 |
| **Less Paid Amount:** | 0.00 |
| **Please Pay in Total:** | 1,275.00 |

**Remit Payment to: Concrete Cutting & Breaking Co. 4500 Airwest Drive SE Grand Rapids MI 49512**

**Our Locations**

| | | | | | |
|---|---|---|---|---|---|
| Detroit, MI | 313-285-5025 | Grand Rapids, MI Highway | 616-456-9441 | Cleveland, OH | 216-441-9560 |
| Orlando, FL | 407-856-0997 | Grand Rapids, MI Service | 800-748-0047 | Columbus, OH | 614-257-1827 |
| Jacksonville, FL | 904-262-9985 | Elkhart, IN | 800-748-0047 | Buffalo, NY | 716-684-0262 |
| | | Lansing, MI | 800-748-0047 | | |

Any invoices over 45 days are subject to a finance charge as well as collection costs and applicable credit card fees.
We Gladly Accept Mastercard, Visa, Amex, & Discover

**Thank you for your Business**
**Please Pay from Invoice**
**No Statement will be issued**

Docusign Envelope ID: F54DB230-A150-452A-B3F0-14C4A48C193C

# Rogers

**Pavement Maintenance, Inc.**
**P.O. Box 65909**
**Orange Park, Fl 32065**

# Proposal

| Date | Proposal # |
|---|---|
| 3/3/2025 | 102726b |

| Customer | |
|---|---|
| J.B. Coxwell Contracting, Inc.<br>6741 Lloyd Rd. West<br>Jacksonville, FL 32254-1200 | |
| Attn To | Garrett |

| Job Name & Address | | | |
|---|---|---|---|
| McCoys Creek Outfall Segment<br>Jacksonville, FL | | | |
| Estimator | | DOP | |

| Description | Qty | U/M |
|---|---|---|
| Layout and Paint 6" Temporary Line, White Reflective Paint. (WHITE) | 835 | LF |
| Layout and Paint 24" Temporary Line, White Reflective Paint. (WHITE) | 12 | LF |
| Layout and Paint 6" Temporary Line, White Reflective Paint. (YELLOW) | 1,795 | LF |
| Layout and Paint 18" Temporary Line, White Reflective Paint. (YELLOW) | 235 | LF |
| Layout and Paint 18" Temporary Line, White Reflective Paint. (WHITE) | 927 | LF |
| Layout and Paint 8" Temporary Line, White Reflective Paint. (WHITE) | 476 | LF |
| TOTAL: $3884.00 | | |
| 67. Layout & Install 6" White DOT Thermoplastic Markings with Type 1 & Type 4 Reflective Beads to a .125 Coverage Rate. | 835 | LF |
| 68. Layout & Install 24" White DOT Thermoplastic Markings with Type 1 & Type 4 Reflective Beads to a .125 Coverage Rate. | 12 | LF |
| 69. Layout & Install 6" Yellow DOT Thermoplastic Markings with Type 1 & Type 4 Reflective Beads to a .125 Coverage Rate. | 1,795 | LF |
| 70. Layout & Install 18" Yellow DOT Thermoplastic Markings with Type 1 & Type 4 Reflective Beads to a .125 Coverage Rate. | 235 | LF |
| 71. Layout & Install 18" White DOT Thermoplastic Markings with Type 1 & Type 4 Reflective Beads to a .125 Coverage Rate. | 927 | LF |
| 72. Layout & Install 8" White DOT Thermoplastic Markings with Type 1 & Type 4 Reflective Beads to a .125 Coverage Rate. | 476 | LF |
| 73. Supply and Install 24" x 30" (R8-3a) "No Parking" Sign on Square Post with Anchor. | 4 | EA |
| TOTAL: $15574.00 | | |

| Acceptance Signature | Total |
|---|---|

| Phone # | Fax # | E-mail | Terms |
|---|---|---|---|
| 904-213-1080 | 904-213-1134 | rogerspm904@comcast.net | Net 30 |

Docusign Envelope ID: F54DB230-A150-452A-B3F0-14C4A48C193C

# Rogers

**Pavement Maintenance, Inc.**
**P.O. Box 65909**
**Orange Park, Fl 32065**

## Proposal

| Date | Proposal # |
|---|---|
| 3/3/2025 | 102726b |

| Customer | |
|---|---|
| J.B. Coxwell Contracting, Inc.<br>6741 Lloyd Rd. West<br>Jacksonville, FL 32254-1200 | |
| Attn To | Garrett |

| Job Name & Address | | | |
|---|---|---|---|
| McCoys Creek Outfall Segment<br>Jacksonville, FL | | | |
| Estimator | | DOP | |

| Description | Qty | U/M |
|---|---|---|
| NOTES<br>1. No removal of existing markings included in this price.<br>2. No M.O.T. included in this price.<br>3. To perform traffic marking reflectivity test using field reflectometer for pavement markings, add $950.<br>4. Price is based on work to be completed Monday-Friday during normal business hours.<br>5. Price includes temporary markings as needed. | | |

| Acceptance Signature | Total | $19,458.00 |
|---|---|---|

| Phone # | Fax # | E-mail | Terms |
|---|---|---|---|
| 904-213-1080 | 904-213-1134 | rogerspm904@comcast.net | Net 30 |

Docusign Envelope ID: F54DB230-A150-452A-B3F0-14C4A48C193C

# CITY OF JACKSONVILLE
# CONTRACTOR'S DAILY REPORT

**CONTRACTOR:** J.B. Coxwell Inc. **Date:** 1.7.25

Superintendent: Jaime Vargas Weather: Sunny / Cold

Job Site: McCoy's Creek #2325 *Temp: A.M.* * P.M. *

Job Safety: Moving Equipment, Overhead Lift, Trench Safety, Heavy Lifting

Deficiencies/Delays

Comments:

| | |
|---|---|
| **Supr.** | 1 |
| **Foreman** | 1 |
| **Carpenter** | |
| **Pipe layer** | |
| **Tail man** | |
| **Hillman** | |
| **Finisher** | |
| **Welder** | |
| **Pile Driver** | |
| **Op. Loader** | 1 |
| ***Op.TrackHoe*** | 1 |
| ***Survey*** | |
| ***Laborer*** | 1 |
| **OP. Crane** | |
| Dozer Oper. | |
| **Rod Busters** | |

Work In Progress: Pipe crew (Cesar Islas Crew) Installed 80 ft of 30" FM pipe in casing.

Crew continued to excavate for thrust collars on FM.

Storm Drain crew ( Josh Ware Crew ) installed 40 ft of 24" RCP from S-7 to S-6. Crew set S-6 and S-7.

Crew ( Willian Delcid Crew ) assisted pipe crew backfilling and bricking up pipes.

Inspector Comments:

Jaime Vargas

**CONTRACTOR** **INSPECTOR**

Docusign Envelope ID: F54DB230-A150-452A-B3F0-14C4A48C193C

# CITY OF JACKSONVILLE
# CONTRACTOR'S DAILY REPORT

**CONTRACTOR:** J.B. Coxwell Inc. **Date:** 1.8.25

Superintendent: Jaime Vargas Weather: Sunny

Job Site: McCoy's Creek #2325 *Temp: A.M.* * P.M. *

Job Safety: Moving Equipment, Overhead Lift, Trench Safety, Heavy Lifting

| | |
|---|---|
| **Supr.** | 1 |
| **Foreman** | 1 |
| **Carpenter** | |
| **Pipe layer** | |
| **Tail man** | |
| **Hillman** | |
| **Finisher** | |
| **Welder** | |
| **Pile Driver** | |
| **Op. Loader** | 1 |
| ***Op.TrackHoe*** | 1 |
| ***Survey*** | |
| ***Laborer*** | 1 |
| **OP. Crane** | |
| Dozer Oper. | |
| **Rod Busters** | |

Deficiencies/Delays

Comments:

Work In Progress: Pipe crew (Cesar Islas Crew) poured 40 CYDS of 6500 PSI concrete for thrust collars on FM. Storm Drain crew ( Josh Ware Crew ) installed 8 joints of 18" RCP from S-6 to S-4. Crew ( Willian Delcid Crew ) 20 FT of 15" HDPE pipe from S-7 to S-7a.Installed S-7a and 10 ft of 8" HDPE with 2 - 45 degree bends. Tied in down Spout.

Inspector Comments:

Jaime Vargas

**CONTRACTOR** **INSPECTOR**

Docusign Envelope ID: F54DB230-A150-452A-B3F0-14C4A48C193C

# CITY OF JACKSONVILLE
# CONTRACTOR'S DAILY REPORT

**CONTRACTOR:** J.B. Coxwell Inc. **Date:** 1.9.25

Superintendent: Jaime Vargas Weather: Sunny / Cold

Job Site: McCoy's Creek #2325 *Temp: A.M.* * P.M. *

Job Safety: Moving Equipment, Overhead Lift, Trench Safety, Heavy Lifting

| | |
|---|---|
| **Supr.** | 1 |
| **Foreman** | 1 |
| **Carpenter** | |
| **Pipe layer** | |
| **Tail man** | |
| **Hillman** | |
| **Finisher** | |
| **Welder** | |
| **Pile Driver** | |
| **Op. Loader** | 1 |
| ***Op.TrackHoe*** | 1 |
| ***Survey*** | |
| ***Laborer*** | 1 |
| **OP. Crane** | |
| Dozer Oper. | |
| **Rod Busters** | |

Deficiencies/Delays

Comments:

Work In Progress: Pipe crew (Cesar Islas Crew) Continued to excavate for additional thrust collar on fm.

Crew built down section of north bypass.

Storm Drain crew ( Josh Ware Crew ) installed 71ft joints of 18" RCP from S-6 to S-4.

Crew ( Willian Delcid Crew ) removed 40 ft of 12" abandoned gas main and excavated for tie in at existing box culvert. concrete cutters will be coming in tomorrow to core box culvert.

Inspector Comments:

Jaime Vargas

**CONTRACTOR** **INSPECTOR**

Docusign Envelope ID: F54DB230-A150-452A-B3F0-14C4A48C193C

# CITY OF JACKSONVILLE
# CONTRACTOR'S DAILY REPORT

**CONTRACTOR:** J.B. Coxwell Inc. **Date:** 1.10.25

Superintendent: Jaime Vargas Weather: Sunny / Cold

Job Site: McCoy's Creek #2325 *Temp: A.M.* * P.M. *

Job Safety: Moving Equipment, Overhead Lift, Trench Safety, Heavy Lifting

| | |
|---|---|
| **Supr.** | 1 |
| **Foreman** | 1 |
| **Carpenter** | |
| **Pipe layer** | |
| **Tail man** | |
| **Hillman** | |
| **Finisher** | |
| **Welder** | |
| **Pile Driver** | |
| **Op. Loader** | 1 |
| ***Op.TrackHoe*** | 1 |
| ***Survey*** | |
| ***Laborer*** | 1 |
| **OP. Crane** | |
| Dozer Oper. | |
| **Rod Busters** | |

Deficiencies/Delays

Comments:

Work In Progress: Pipe crew (Cesar Islas Crew) Poured 18 CYDS of 6500 PSI concrete for collars, and continued to build Bypass.

Storm Drain crew ( Josh Ware Crew ) Installed S-4 structure and began densities on 18" pipe. .

Crew ( Willian Delcid Crew )Installed 35 ft of drainage pipe at existing box culvert after concrete cutters cored structure. Crew back filled trench.

Inspector Comments:

Jaime Vargas

**CONTRACTOR** **INSPECTOR**

Docusign Envelope ID: F54DB230-A150-452A-B3F0-14C4A48C193C

# CITY OF JACKSONVILLE
# CONTRACTOR'S DAILY REPORT

**CONTRACTOR:** J.B. Coxwell Inc. **Date:** 1.16.25

Superintendent: Jaime Vargas Weather: Sunny / Cold

Job Site: McCoy's Creek #2325 *Temp: A.M.* * P.M. *

Job Safety: Moving Equipment, Overhead Lift, Trench Safety, Heavy Lifting

| | |
|---|---|
| **Supr.** | 1 |
| **Foreman** | 1 |
| **Carpenter** | |
| **Pipe layer** | |
| **Tail man** | |
| **Hillman** | |
| **Finisher** | |
| **Welder** | |
| **Pile Driver** | |
| **Op. Loader** | 1 |
| ***Op.TrackHoe*** | 1 |
| ***Survey*** | |
| ***Laborer*** | 1 |
| **OP. Crane** | |
| Dozer Oper. | |
| **Rod Busters** | |

Deficiencies/Delays

Comments:

Work In Progress: Pipe crew (Cesar Islas Crew) installed 2-30" 45 degree bends and 35 ft of 30" pipe. Crew excavated for fm cap and tie back wall.

( Willian Delcid Crew ) Installed S4a,S4b,S4c, and 96 ft of storm drain. Crew tied in 2 down spouts from bridge.

Inspector Comments:

Jaime Vargas

**CONTRACTOR** **INSPECTOR**

Docusign Envelope ID: F54DB230-A150-452A-B3F0-14C4A48C193C

# CITY OF JACKSONVILLE
# CONTRACTOR'S DAILY REPORT

**CONTRACTOR:** J.B. Coxwell Inc. **Date:** 2.1.25

Superintendent: Jaime Vargas Weather: Sunny

Job Site: McCoy's Creek #2325 *Temp: A.M.* * P.M. *

Job Safety: Moving Equipment, Overhead Lift, Trench Safety, Heavy Lifting

| | |
|---|---|
| **Supr.** | 1 |
| **Foreman** | 1 |
| **Carpenter** | |
| **Pipe layer** | |
| **Tail man** | |
| **Hillman** | |
| **Finisher** | |
| **Welder** | |
| **Pile Driver** | |
| **Op. Loader** | 1 |
| ***Op.TrackHoe*** | 1 |
| ***Survey*** | |
| ***Laborer*** | 1 |
| **OP. Crane** | |
| Dozer Oper. | |
| **Rod Busters** | |

Deficiencies/Delays

Comments:

Work In Progress: Pipe crew (Cesar Islas Crew) assisted Range Line with line stop installation.

Crew assisted Wilian's crew with Storm drain pipe from s1 to s2. Continued pumping FM Pressure test.

( Willian Delcid Crew ) installed s1 and s2 structures. Installed 45 ft of 15" RCP.

Poured 7.5 cyds of concrete for line stops.( Titan and JBC)

Inspector Comments:

Jaime Vargas

**CONTRACTOR** **INSPECTOR**

Docusign Envelope ID: F54DB230-A150-452A-B3F0-14C4A48C193C

# CITY OF JACKSONVILLE
# CONTRACTOR'S DAILY REPORT

**CONTRACTOR:** J.B. Coxwell Inc. **Date:** 2.14.25

Superintendent: Jaime Vargas Weather: Sunny

Job Site: McCoy's Creek #2325 *Temp: A.M.* * P.M. *

Job Safety: Moving Equipment, Overhead Lift, Trench Safety, Heavy Lifting

Deficiencies/Delays

Comments: - Activated Bypass. 3/3/25

| | |
|---|---|
| **Supr.** | 1 |
| **Foreman** | 1 |
| **Carpenter** | |
| **Pipe layer** | |
| **Tail man** | |
| **Hillman** | |
| **Finisher** | |
| **Welder** | |
| **Pile Driver** | |
| **Op. Loader** | 1 |
| ***Op. TrackHoe*** | 1 |
| ***Survey*** | |
| ***Laborer*** | 2 |
| **OP. Crane** | |
| Dozer Oper. | |
| **Rod Busters** | |

Work In Progress: Wilian Delcid Crew continued to cut sub grade for proposed road. Crew removed 12 loads of excesses soil used 1 leased truck from DJ Contracting.

- Crew excavated for flow fill around FM pipe across new road. Got flow fill set up for Saturday at 8AM.

Grade Crew( Tracy Holmes) Crew began to balance dirt for new proposed road.

Inspector Comments:

Jaime Vargas

**CONTRACTOR** **INSPECTOR**

Docusign Envelope ID: F54DB230-A150-452A-B3F0-14C4A48C193C

# CITY OF JACKSONVILLE
# CONTRACTOR'S DAILY REPORT

**CONTRACTOR:** J.B. Coxwell Inc. **Date:** 2.15.25

Superintendent: Jaime Vargas Weather: Cloudy

Job Site: McCoy's Creek #2325 *Temp: A.M.* * P.M. *

Job Safety: Moving Equipment, Overhead Lift, Trench Safety, Heavy Lifting

| | |
|---|---|
| **Supr.** | 1 |
| **Foreman** | 1 |
| **Carpenter** | |
| **Pipe layer** | |
| **Tail man** | |
| **Hillman** | |
| **Finisher** | |
| **Welder** | |
| **Pile Driver** | |
| **Op. Loader** | 1 |
| ***Op.TrackHoe*** | |
| ***Survey*** | |
| ***Laborer*** | 1 |
| **OP. Crane** | |
| Dozer Oper. | |
| **Rod Busters** | |

Deficiencies/Delays

Comments: - Activated Bypass. 3/3/25

Work In Progress: Wilian Delcid Crew dumped 20 cyds of flow fill before Titan Canceled pour @ 9:00 am.

- Pour got moved to Monday at 4:00 am. Pour was scheduled earlier in the week .

- Crew installed 55 ft of 2" conduit for high mass lighting.

Grade Crew( Tracy Holmes) OFF due to flow fill pour.

* Grade crew will not be able to work on roadway Monday due to flow fill cancellation.

Inspector Comments:

Jaime Vargas

**CONTRACTOR** **INSPECTOR**

Docusign Envelope ID: F54DB230-A150-452A-B3F0-14C4A48C193C

# CITY OF JACKSONVILLE
# CONTRACTOR'S DAILY REPORT

**CONTRACTOR:** J.B. Coxwell Inc. **Date:** 2.17.25

Superintendent: Jaime Vargas Weather: Cloudy / Rain

Job Site: McCoy's Creek #2325 *Temp: A.M.* * P.M. *

Job Safety: Moving Equipment, Overhead Lift, Trench Safety, Heavy Lifting

Deficiencies/Delays

Comments: - Activated Bypass. 3/3/25

| | |
|---|---|
| **Supr.** | 1 |
| **Foreman** | 1 |
| **Carpenter** | |
| **Pipe layer** | |
| **Tail man** | |
| **Hillman** | |
| **Finisher** | |
| **Welder** | |
| **Pile Driver** | |
| **Op. Loader** | 1 |
| ***Op.TrackHoe*** | 1 |
| ***Survey*** | |
| ***Laborer*** | 1 |
| **OP. Crane** | |
| Dozer Oper. | |
| **Rod Busters** | |

Work In Progress: (Willina Delcid Crew) Came in 4:00 am to pour 100 CYDS of excavatable flow fill due to Titan cancellation on Saturday. Crew pured flow fill around force main with in roadway.

- Crew assisted Blue Iron with press sheet installation.

- Tracy Holmes ( Grade Crew) - continue to level off proposed roadway. Crew used 1 Leased truck from DJ Contracting .

* Blue Iron Moved in with 2 transports * Temporary sheets also came in

Inspector Comments:

Jaime Vargas

**CONTRACTOR** **INSPECTOR**

Docusign Envelope ID: F54DB230-A150-452A-B3F0-14C4A48C193C

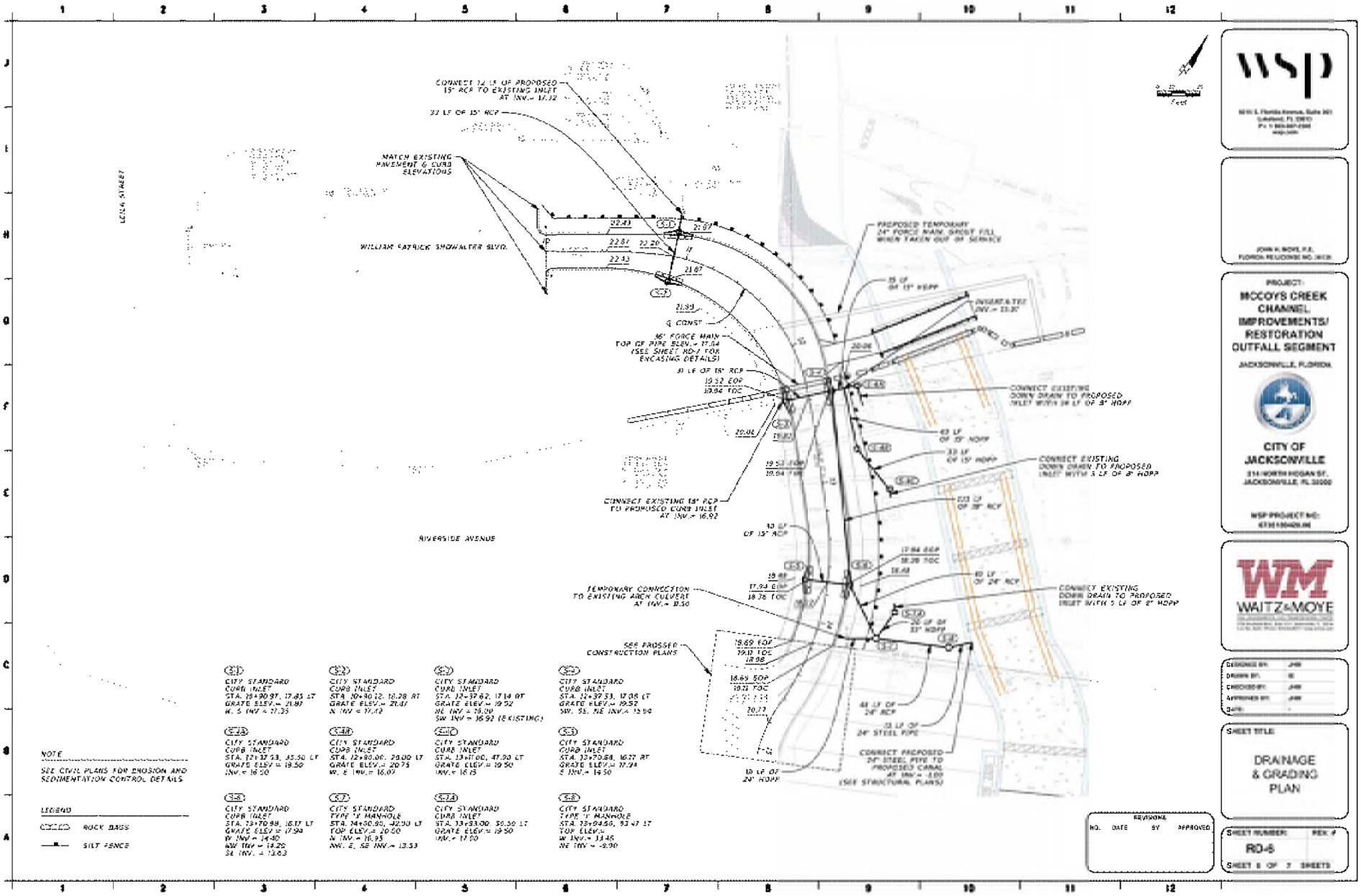

Docusign Envelope ID: F54DB230-A150-452A-B3F0-14C4A48C193C

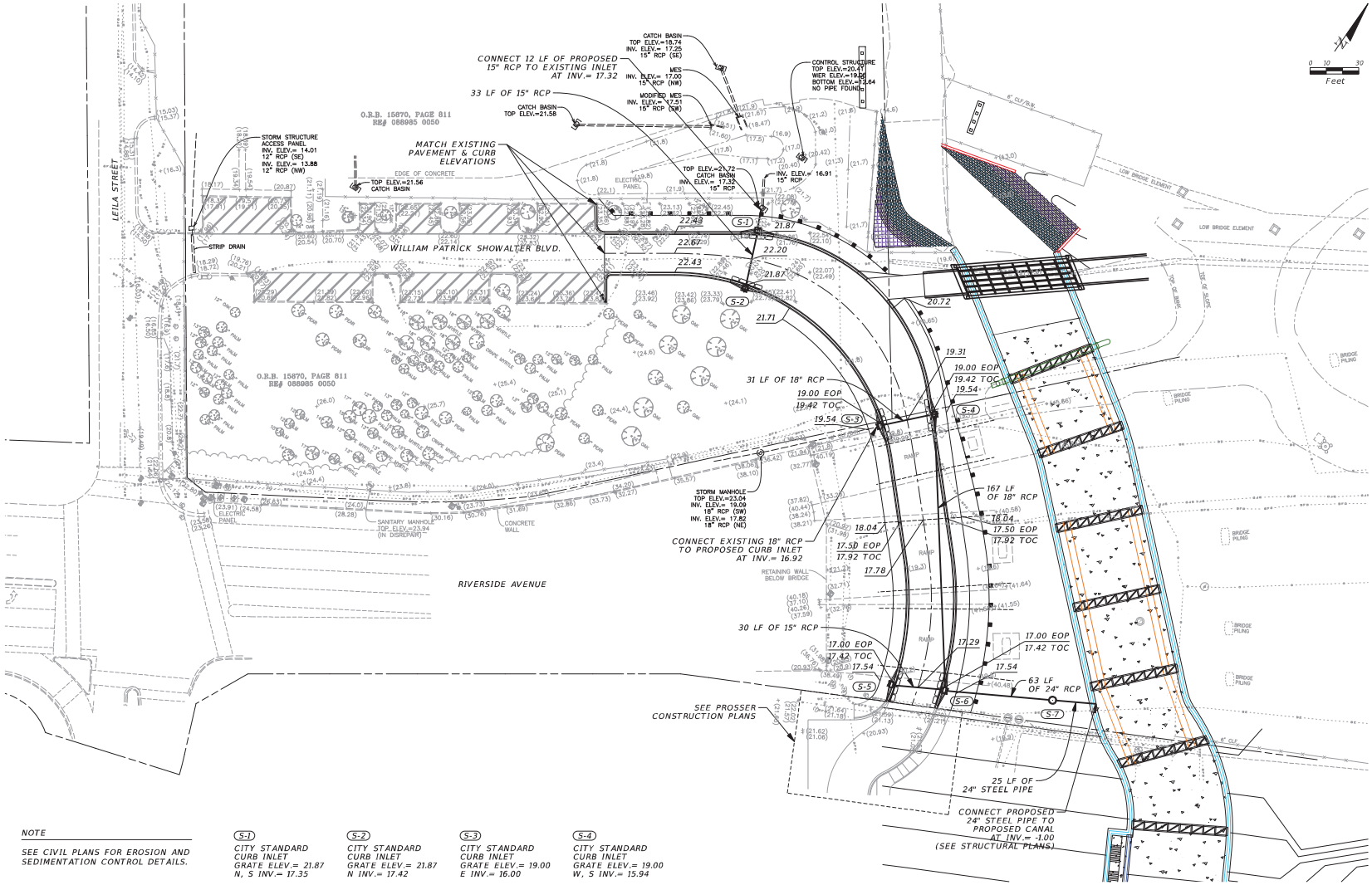


NOTE

SEE CIVIL PLANS FOR EROSION AND SEDIMENTATION CONTROL DETAILS.

LEGEND

ROCK BAGS

SILT FENCE

S-1 CITY STANDARD CURB INLET GRATE ELEV.= 21.87 N, S INV.= 17.35

S-2 CITY STANDARD CURB INLET GRATE ELEV.= 21.87 N INV.= 17.42

S-3 CITY STANDARD CURB INLET GRATE ELEV.= 19.00 E INV.= 16.00

S-4 CITY STANDARD CURB INLET GRATE ELEV.= 19.00 W, S INV.= 15.94

S-5 CITY STANDARD CURB INLET GRATE ELEV.= 17.00 E INV.= 14.00

S-6 CITY STANDARD CURB INLET GRATE ELEV.= 17.00 N INV.= 15.64 W, E INV.= 13.93

S-7 CITY STANDARD TYPE 'J' MANHOLE GRATE ELEV.= 20.00 W INV.= 13.85 E INV.= -0.5

| REVISIONS | | | |
|---|---|---|---|
| NO. | DATE | BY | APPROVED |
| | | | |

WSP
5015 S. Florida Avenue, Suite 301
Lakeland, FL 33813
P + 1 863-667-2345
wsp.com

**APPROVED FOR BID**

JOHN H. MOYE, P.E.
FLORIDA PE LICENSE NO. 36131

PROJECT:
MCCOYS CREEK CHANNEL IMPROVEMENTS/ RESTORATION OUTFALL SEGMENT
JACKSONVILLE, FLORIDA

CITY OF JACKSONVILLE
214 NORTH HOGAN ST.
JACKSONVILLE, FL 32202

WSP PROJECT NO:
6735189428.06

WAITZ&MOYE
PROFESSIONAL CONSULTANTS IN ENGINEERING
3236 Southside Blvd., Suite 101 Jacksonville, FL 32216
Office 904.296.2034 Phone 904.642.2311 www.waitzmoye.com

| | |
|---|---|
| DESIGNED BY: | JHM |
| DRAWN BY: | IE |
| CHECKED BY: | JHM |
| APPROVED BY: | JHM |
| DATE: | - |

SHEET TITLE:

DRAINAGE & GRADING PLAN

| SHEET NUMBER: | REV. # |
|---|---|
| RD-6 | |
| SHEET 6 OF 6 SHEETS | |

Docusign Envelope ID: F54DB230-A150-452A-B3F0-14C4A48C193C

# CHANGE ORDER REQUEST #23

# SECTION 4 TIE-BACK REDESIGN

# MCCOY'S CREEK OUTFALL REALIGNMENT

# APRIL 20, 2025

Docusign Envelope ID: F54DB230-A150-452A-B3F0-14C4A48C193C

# GAI ENTITLEMENT ANALYSIS

# CHANGE ORDER REQUEST #23

# SECTION 4 TIE-BACK REDESIGN

# MCCOY'S CREEK OUTFALL REALIGNMENT

# APRIL 20, 2025

Docusign Envelope ID: F54DB230-A150-452A-B3F0-14C4A48C193C



**CHANGE ORDER REQUEST #23: Engineer's Entitlement Analysis for The Redesigned Section 4 Tie-Back System**

Job Description: McCoy's Creek Outfall Realignment
COJ Contract Number: 70646-23
April 20, 2025

**Summary**

JB Coxwell Construction Company, Inc. (JB Coxwell - "Contractor") was the successful Contractor selected to construct the above-mentioned project. The Contractor is asking for compensation for the furnishing and installation of the redesigned Section 4 Tie-Back System. This allowed the critical path items to proceed and keep the project on schedule.

There **ARE** impacts to the critical path for this item. The Contractor is asking for $315,024.46 related to costs for the materials, labor, and equipment necessary to install the Tie-Back System.

| | Cost | Markup | Sales Tax (7.5%) | Total |
|---|---|---|---|---|
| Materials | $ 102,045.93 | $ 16,378.37 | $ 7,143.22 | $125,567.52 |
| Labor and Burden | $ 38,066.63 | $5,709.96 | N/A | $43,776.59 |
| Equipment | $125,234.40 | $18,785.16 | N/A | $144,019.56 |
| Bond (0.53%) | $1,660.79 | N/A | N/A | $1,660.79 |
| | | | | |
| | | | | |
| | | | | |
| | | **TOTAL**** | | **$315,024.46** |

Entitlement has been found for the Contractor concerning money for the furnishing and installation of the redesigned tie-back system in Section 4. The Contractor is requesting $315,024.46, consideration for this amount is due to continuing with phasing of the project.

**Description:**

Furnishing of materials, labor and equipment, and associated costs related to sales tax and markup for the Section 4 tie-back system.

**Entitlement Analysis:**

Compensation is in accordance with Division 3 COJ General Conditions Section 20.34.

**COJ Participation:** $ 315,024.46.

**Engineer's Estimate: Time Analysis and Justification:**

The contractor is requesting 12 days added to the contract.

**Engineer's Estimate: Overall Cost:**

For labor and burden, materials, and applicable mark-ups outlined in Division 3 COJ General Conditions Section 20.34.2.2. The contractor's price of $ 315,024.46 compared

Docusign Envelope ID: F54DB230-A150-452A-B3F0-14C4A48C193C



favorably with GAI's Engineer's Estimate of $ 315,614.33. The Delta is $589.87 in favor of COJ.

**Premium Cost Analysis:**

No premium cost associated with this issue. Costs are based on labor, equipment and material.

Revised Plan Sheet Nos.- **N/A**
Design Error or Omission: - **NO**

Docusign Envelope ID: F54DB230-A150-452A-B3F0-14C4A48C193C

# PLAN REVISION SECTION 4

# CHANGE ORDER REQUEST #23

# SECTION 4 TIE-BACK REDESIGN

# MCCOY'S CREEK OUTFALL REALIGNMENT

# APRIL 20, 2025

Docusign Envelope ID: F54DB230-A150-452A-B3F0-14C4A48C193C

# MCCOY'S CREEK CHANNEL IMPROVEMENTS/RESTORATION

# OUTFALL SEGMENT SHORING WALL SECTION 4 TIEBACKS

## DUVAL COUNTY, FLORIDA

UTILITY LOCATING REQUIREMENTS

FOR FLORIDA CALL SUNSHINE AT (800)432-4770 AT LEAST 72 HOURS BEFORE ANY EXCAVATING, OR DRILLING, BUT NO MORE THAN 14 DAYS PRIOR TO STARTING WORK. RELOCATES MUST BE REQUESTED IF LOCATION MARKS BECOME OBSCURED.

| DATE CALLED | BY | REFERENCE No. |
|---|---|---|
| | | |
| | | |
| | | |
| | | |
| | | |

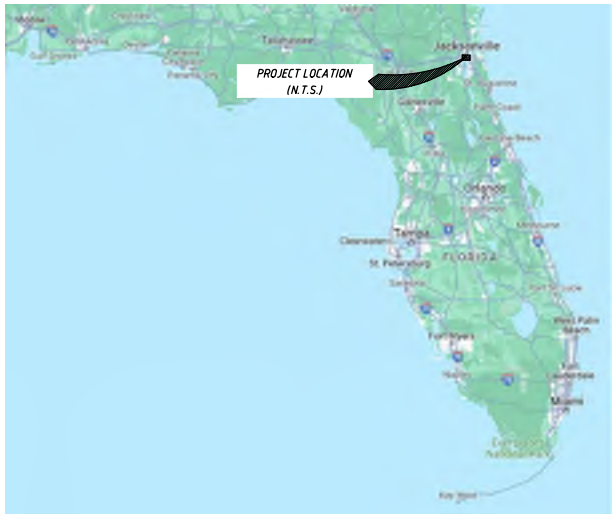


LOCATION MAP
(N.T.S.)

PROJECT LOCATION
(N.T.S.)

INDEX:


1 COVER
2 GENERAL NOTES
3 PLAN VIEW
4 WALL SECTION
5 TIEBACK DETAILS
6 SCHEDULE



*PREPARED BY:*
SOE ENGINEERS, LLC
8449 KOCHER DRIVE
BROOKSVILLE, FL. 34601
PHONE: (813) 269 – 2422


STEPHEN DIMINO LICENSE No. 76869 STATE OF FLORIDA PROFESSIONAL ENGINEER

THIS ITEM HAS BEEN DIGITALLY SIGNED AND SEALED BY:

PRINTED COPIES OF THIS DOCUMENT ARE NOT CONSIDERED SIGNED AND SEALED AND THE SIGNATURE MUST BE VERIFIED ON ANY ELECTRONIC COPIES.

THE CONSTRUCTION OF THIS WALL UTILIZING THESE DRAWINGS SHALL BE BY MAYLOR FOUNDATION CONTRACTORS, LLC.

THESE DRAWINGS ARE THE PROPERTY OF SOE ENGINEERS, LLC. THEY MAY NOT BE COPIED, REPRODUCED OR USED WITHOUT SOE ENGINEERS' EXPRESSED WRITTEN PERMISSION. COPYRIGHT 2024. SOE ENGINEERS, LLC

REVISIONS

| DATE | BY | DESCRIPTION | DATE | BY | DESCRIPTION |
|---|---|---|---|---|---|
| | | | | | |

SOE Engineers

STEPHEN L. DIMINO, P.E. FL. LICENSE NO. 76869
SOE ENGINEERS, LLC

DRAWN BY: D.G.
DATE: 10/29/2024
REF. PRJ. NO.

CITY OF JACKSONVILLE

COUNTY: DUVAL

SHEET TITLE: COVER

PROJECT NAME: MCCOY'S CREEK CHANNEL IMPROVEMENTS/RESTORATION OUTFALL SEGMENT SHORING WALL SECTION 4 TIEBACKS

SHEET NO. 01 OF 06

Docusign Envelope ID: F54DB230-A150-452A-B3F0-14C4A48C193C

THIS PLAN SHOWS THE TIEBACK AND WALE WORK REQUIRED FOR THE CONSTRUCTION OF THE MCCOY'S CREEK CHANNEL IMPROVEMENTS SHORING WALL SECTION 4 TIEBACKS PROJECT LOCATED IN DUVAL COUNTY, FL. ONLY THOSE PORTIONS NECESSARY TO CLARIFY THIS WORK HAVE BEEN SHOWN. THE FOLLOWING GENERAL NOTES AND SEQUENCE OF WORK SHOULD BE FOLLOWED CLOSELY:

## GENERAL NOTES:

1. LOCATIONS OF THE UTILITIES SHOWN ON THE PLANS ARE APPROXIMATE. REFER TO THE UTILITY ADJUSTMENT PLANS FOR DETAILS. PHYSICALLY AND VISUALLY VERIFY THE LOCATION AND DEPTH OF ADJACENT UTILITIES (BY OTHERS). THE GENERAL CONTRACTOR SHALL MOVE ALL UTILITIES THAT CONFLICT WITH THE GROUND ANCHORS AND SHEET PILES PRIOR THE START OF THE TEMPORARY WALL WORK.
2. AT THE GROUND SURFACE, LOCATE THE DRILL HOLE WITHIN 12 INCHES OF THE LOCATION SHOWN IN THE PLANS OR THE APPROVED SHOP DRAWINGS. LOCATE THE DRILL HOLE SO THAT THE LONGITUDINAL AXIS OF THE DRILL HOLE AND THE LONGITUDINAL AXIS OF THE TENDON ARE PARALLEL. IN PARTICULAR, DO NOT DRILL THE PRESTRESSED SOIL ANCHOR HOLE IN A LOCATION THAT REQUIRES THE TENDON TO BE BENT IN ORDER TO CONNECT THE BEARING PLATE TO THE SUPPORTED STRUCTURE. AT THE POINT OF ENTRY, INSTALL THE PRESTRESSED SOIL ANCHOR WITHIN PLUS OR MINUS 3 DEGREES OF THE INCLINATION FROM HORIZONTAL SHOWN IN THE PLANS OR THE APPROVED SHOP DRAWINGS. AT THE POINT OF ENTRY, MAKE THE HORIZONTAL ANGLE FORMED BY THE PRESTRESSED SOIL ANCHOR AND THE STRICTURE TO WITHIN PLUS OR MINUS 3 DEGREES OF A LINE DRAWN PERPENDICULAR TO THE PLANE OF THE STRUCTURE UNLESS OTHERWISE SHOWN IN THE PLANS OR APPROVED SHOP DRAWINGS. DO NOT ALLOW THE PRESTRESSED SOIL ANCHORS TO EXTEND BEYOND THE RIGHT-OF-WAY EASEMENT LIMITS SHOWN IN THE PLANS.
3. THE GENERAL CONTRACTOR IS RESPONSIBLE FOR THE CONTROL OF SURFACE WATER AT THE TOP OF THE WALL. THIS INCLUDES THE INSTALLATION OF A FULL LENGTH CONCRETE OR ASPHALTIC CURB AND COLLECTION PIPES. SANDBAGS AND CONCRETE BARRIERS ARE NOT SUFFICIENT.
4. WALL LAYOUTS AND OFFSETS ARE TO THE FRONT FACE OF THE WALL.
5. THIS DESIGN HAS BEEN PREPARED BY SOE ENGINEERS, LLC FOR USE OF MAYLOR FOUNDATION CONTRACTORS, LLC, THEREFORE, IT IS REQUIRED THAT THE CONSTRUCTION BE COMPLETED BY MAYLOR FOUNDATION CONTRACTORS, LLC.
6. THE DESIGN IS FOR THE TRANSFER BEAM, STEEL CONNECTION WALE AND TIEBACK BONDED LENGTH. THE CONCRETE CAP AND FACADE HAS BEEN DESIGNED BY OTHERS TO RESIST THE FINAL FULL TIEBACK LOAD.
7. ALL DEWATERING OPERATIONS, IF REQUIRED, WILL BE COMPLETED PRIOR TO MAYLOR'S MOBILIZATION TO THE SITE.

## SEQUENCE OF WORK:

1. INSTALL A FIRM LEVEL BENCH TO ALLOW FOR THE INSTALLATION OF THE TIEBACKS.
2. INSTALL THE TIEBACKS AT THE ELEVATIONS AND AT THE ANGLE INDICATED IN THE APPROVED SHOP DRAWINGS.
3. INSTALL PLATES AS SHOWN IN THESE DRAWINGS (BY OTHERS).
4. TEST THE ANCHORS IN ACCORDANCE WITH FDOT SPECIFICATION SECTION 451.
5. REPEAT STEPS 2 THROUGH 4 UNTIL ALL TIEBACKS ARE INSTALLED AND TESTED.

## SPECIFICATIONS AND JOBSITE SPECIFIC REQUIREMENTS:

1. DESIGN SPECIFICATIONS:

   A. AASHTO LOAD AND RESISTANCE FACTOR DESIGN (LRFD) BRIDGE DESIGN SPECIFICATIONS 8TH EDITION AND APPROVED REVISIONS AND INTERIMS.
   B. FDOT STRUCTURES MANUAL DATED JANUARY 2021.
   D. FLORIDA DESIGN MANUAL DATED JANUARY 2021.
   E. WELDING STANDARDS AND DETAILS SHALL BE IN ACCORDANCE WITH AWS D1.5 BRIDGE WELDING CODE
   F. FDOT STANDARD SPECIFICATIONS FOR ROAD AND BRIDGE CONSTRUCTION, 2020.
   G. AISC STEEL CONSTRUCTION MANUAL, 16TH EDITION 2023.

2. THE ANCHORS SHALL BE CONSTRUCTED AND TESTED IN ACCORDANCE WITH FDOT SPECIFICATION 451.
3. JTA WALL PLAN AT MCCOY'S CREEK DATED 12/10/2024 WERE USED TO DEVELOP THESE SHOP DRAWINGS. .
4. ENSURE THAT EXCAVATION OR OTHER CONSTRUCTION ACTIVITIES DO NOT AFFECT THE PERFORMANCE OF THE PERMANENT TIEBACKS.

| MATERIALS* | |
|---|---|
| TIEBACKS | G-270 SEVEN WIRE, LOW RELAXATION STRANDS CONFORMING TO ASTM A-416 |
| BEARING PLATES | ASTM A709 GR50 ($F_Y$=50KSI) |
| WALERS | ASTM A709 GR50 ($F_Y$=50KSI) |
| MISCELLANEOUS STEEL | ASTM A572 GR50 ($F_Y$=50KSI) |
| CENTRALIZERS | CENTRALIZERS SHALL BE MANUFACTURED FROM PVC PIPE OR TUBE, STEEL, OR OTHER MATERIAL NOT DETRIMENTAL TO THE TENDONS |
| CEMENT GROUT | TYPE I/II PORTLAND CEMENT SHALL BE MIXED WITH POTABLE WATER AT AN APPROXIMATE MIX RATIO OF 5 TO 6 GAL OF WATER PER 94LB SACK OF CEMENT OR EQUIVALENT APPROVED READY MIX GROUT |
| WATER | CLEAN AND FREE OF SUBSTANCES DELETERIOUS TO GROUT, CONCRETE OR STEEL |

*EQUIVALENT MEMBERS/MATERIALS MAY BE SUBSTITUTED.

Docusign Envelope ID: F54DB230-A150-452A-B3F0-14C4A48C193C

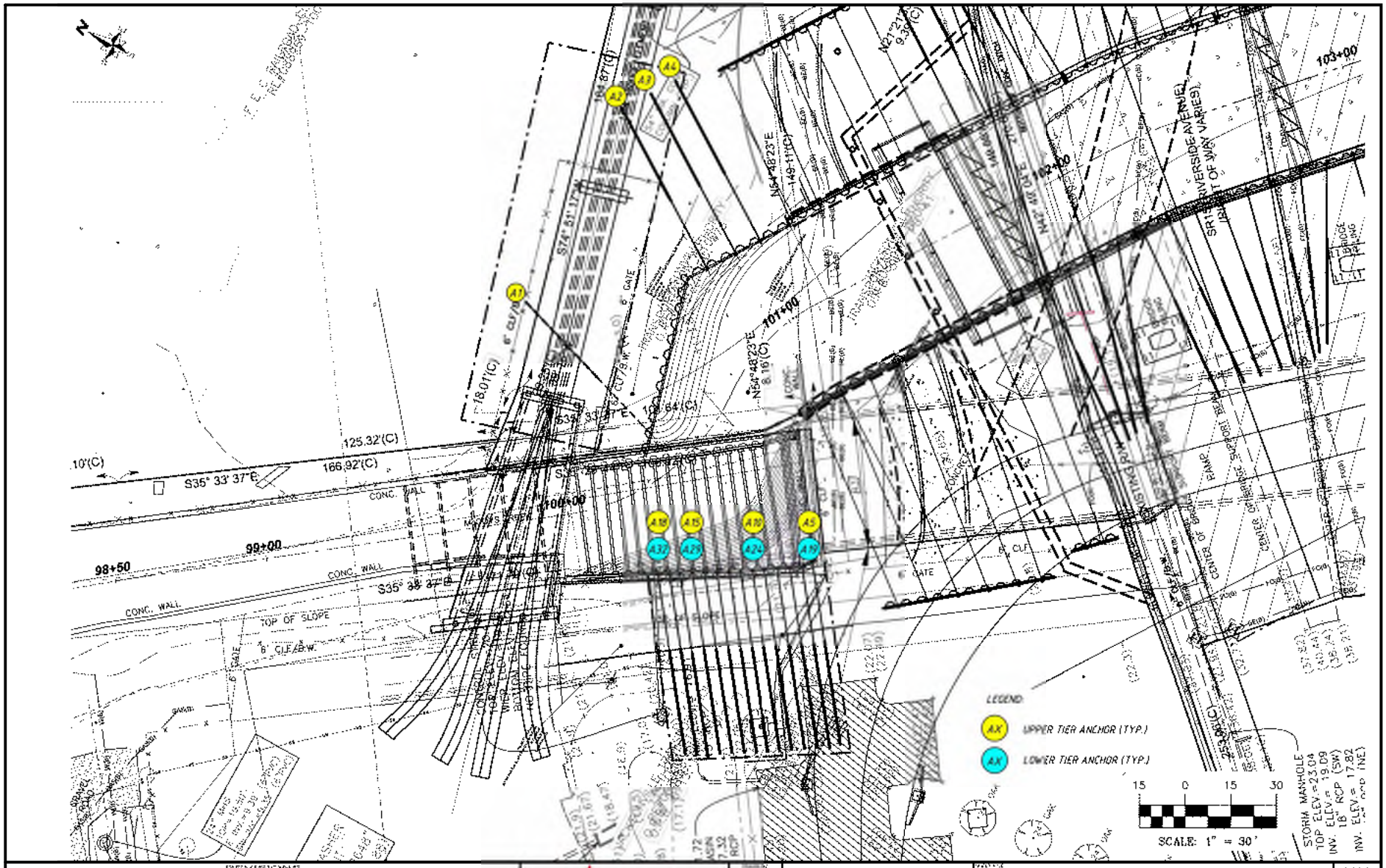

Docusign Envelope ID: F54DB230-A150-452A-B3F0-14C4A48C193C

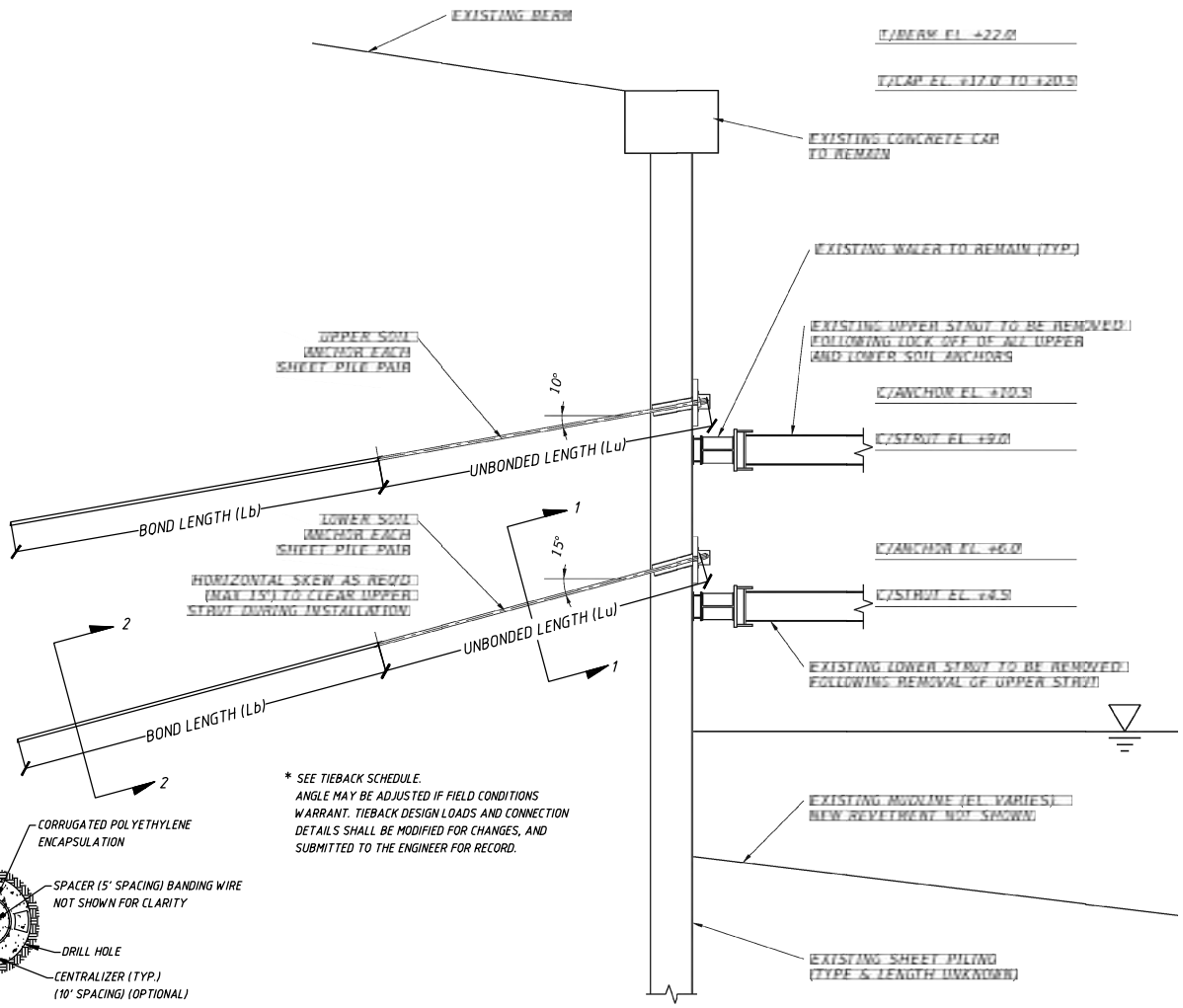


SECTION - TYPICAL JTA BULKHEAD

| REVISIONS | | | | | |
|---|---|---|---|---|---|
| DATE | BY | DESCRIPTION | DATE | BY | DESCRIPTION |
| | | | | | |

SOE Engineers

STEPHEN L. DIMINO, P.E. FL. LICENSE NO. 76869
SOE ENGINEERS, LLC

DRAWN BY: D.G.
DATE: 10/29/2024
REF. PRJ. NO.

CITY OF JACKSONVILLE

COUNTY: DUVAL

SHEET TITLE: WALL SECTION

PROJECT NAME: MCCOY'S CREEK CHANNEL IMPROVEMENTS/RESTORATION OUTFALL SEGMENT SHORING WALL SECTION 4 TIEBACKS

SHEET NO. 04 OF 06

Docusign Envelope ID: F54DB230-A150-452A-B3F0-14C4A48C193C

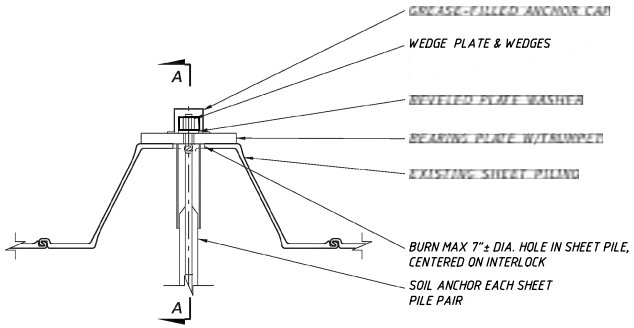


DETAIL - TYPICAL ANCHOR CONNECTION

(HORIZONTAL SKEW FOR LOWER ANCHORS (WHERE REQD) NOT SHOWN)

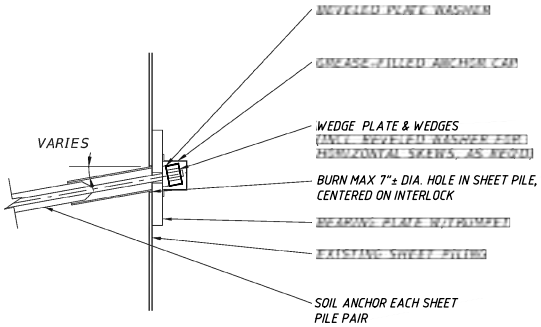


SECTION A-A

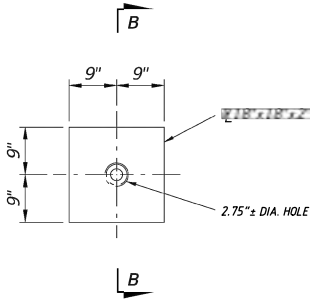


DETAIL - TYPICAL BEARING PLATE

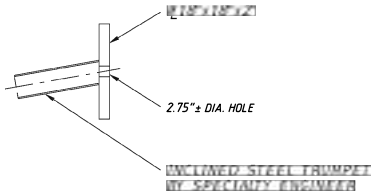


SECTION B-B

| REVISIONS | | | | | |
|---|---|---|---|---|---|
| DATE | BY | DESCRIPTION | DATE | BY | DESCRIPTION |
| | | | | | |

STEPHEN L. DIMINO, P.E. FL. LICENSE NO. 76869
SOE ENGINEERS, LLC

DRAWN BY: D.G.
DATE: 10/29/2024
REF. PRJ. NO.

CITY OF JACKSONVILLE

COUNTY: DUVAL

SHEET TITLE: TIEBACK DETAILS

PROJECT NAME: MCCOY'S CREEK CHANNEL IMPROVEMENTS/RESTORATION
OUTFALL SEGMENT SHORING WALL SECTION 4 TIEBACKS

SHEET NO. 05
OF 06

Docusign Envelope ID: F54DB230-A150-452A-B3F0-14C4A48C193C

JTA SHEET PILE WALL & ANCHOR DATA TABLE

FOR DESIGN

| CONSTRUCTION INFORMATION | | | | | | | | | | ANALYSIS PARAMETERS | | | | | | SPECIALTY CONTRACTOR DESIGN | | | | | |
|---|---|---|---|---|---|---|---|---|---|---|---|---|---|---|---|---|---|---|---|---|---|
| WALL DESCRIPTION | | ANCHORS | | | | | | | | SOIL ELEVATION | | WATER ELEVATION | | | | | | | | | |
| WALL NUMBER | ANCHOR LOCATION | MAXIMUM ANCHOR SPACING (FT) | FACTORED HORIZONTAL ANCHOR LOAD (K/FT) | SERVICE (UNFACTORED) HORIZONTAL ANCHOR LOAD (K/FT) | FACTORED ANCHOR DESIGN LOAD (KIPS) | SERVICE (UNFACTORED) ANCHOR DESIGN LOAD (KIPS) | SERVICE (UNFACTORED) ANCHOR LOCKOFF LOAD (KIPS) | MINIMUM UNBONDED LENGTH (FT) | INSTALLATION ANGLE BELOW HORIZONTAL (DEGREES) | MAX TOP OF CAP ELEV (FT) | FRONT OF WALL (FT) | BACK OF WALL (FT) | FRONT OF WALL (FT) | BACK OF WALL (FT) | SERVICE DESIGN LIVE LOAD (PSF) | ANCHOR NAME | LACKING LENGTH (FT) $L_1$ | MINIMUM BOND LENGTH (FT) $L_B$ | TOTAL ANCHOR LENGTH (FT) $L_T$ | GR 270 Strand Tendon | |
| Section 4 | A1-A4 | 4.25 | 14.0 | 20.5 | 59.9 | 45 | 45 | 25 | 10 | +20.5 | -4.0 | +22.0 | 0 | +8.0 | 200.0 | A1-A4 | 5 | 35 | 55 | 2 | 0.6" |
| | A5-A18 | 4.25 | 14.0 | 20.5 | 59.9 | 45 | 45 | 25 | 10 | +20.5 | -4.0 | +22.0 | 0 | +8.0 | 200.0 | A5-A18 | 5 | 35 | 55 | 2 | 0.6" |
| | A19-A32 | 4.25 | 20.1 | 35.1 | 87.8 | 66 | 66 | 25 | 15 | +20.5 | -4.0 | +22.0 | 0 | +8.0 | 200.0 | A19-A32 | 5 | 35 | 65 | 3 | 0.6" |

*-MINIMUM OF DESIGN GROUND SURFACE OR DESIGN SCOUR DEPTH*

*DATA TABLE NOTES:*

1. *THE DESIGN PARAMETER INDICATED IN THE TABLE WERE USED IN THE SHEET PILE WALL ANALYSIS AND THE ANCHOR DESIGN*
2. *SERVICE (UNFACTORED) ANCHOR DESIGN LOAD = (SERVICE HORIZONTAL ANCHOR LOAD (kips/ft) x ANCHOR SPACING (ft) / COSINE (INSTALLATION ANGLE BELOW HORIZONTAL)*
3. *ANCHOR LOCK-OFF LOAD = HORIZONTAL ANCHOR LOCK-OFF LOAD (kips/ft) x ANCHOR SPACING (ft) / COSINE (INSTALLATION ANGLE BELOW HORIZONTAL)*

*ANCHOR NOTES:*

1. *CONTRACTOR TO VERIFY LOCATION OF ALL UTILITIES PRIOR TO ANY PILE INSTALLATION ACTIVITIES.*
2. *REMOVE EXISTING STRUTS ONLY AFTER UPPER & LOWER ANCHORS ARE INSTALLED AND LOCKED OFF.*
3. *ALL STEEL PLATES SHALL BE ASTM-A572 GRADE 50.*
4. *MULTIPLE CORROSION PROTECTED G-270 SEVEN WIRE, LOW RELAXATION STRANDS CONFORMING TO ASTM A-416*

REVISIONS

| DATE | BY | DESCRIPTION | DATE | BY | DESCRIPTION |
|---|---|---|---|---|---|
| | | | | | |

SOE Engineers

STEPHEN L. DIMINO, P.E. FL. LICENSE NO. 76869
SOE ENGINEERS, LLC

DRAWN BY: D.G.
DATE: 10/29/2024
REF. PRJ. NO.

CITY OF JACKSONVILLE

COUNTY: DUVAL

SHEET TITLE: SCHEDULE

PROJECT NAME: MCCOY'S CREEK CHANNEL IMPROVEMENTS/RESTORATION OUTFALL SEGMENT SHORING WALL SECTION 4 TIEBACKS

SHEET NO. 06

OF 06

Docusign Envelope ID: F54DB230-A150-452A-B3F0-14C4A48C193C

# GAI ENGINEER'S ESTIMATE

# CHANGE ORDER REQUEST #23

# SECTION 4 TIE-BACK REDESIGN

# MCCOY'S CREEK OUTFALL REALIGNMENT

# APRIL 20, 2025

Docusign Envelope ID: F54DB230-A150-452A-B3F0-14C4A48C193C

**ENGINEER'S ESTIMATE OF EXTRA WORK**
**PROJECT**: MCOY'S CREEK OUTFALL REALIGNMENT
**COJ CONTRACT NO.:** 70646-23
**CHANGE ORDER NO.: 23**
**ISSUE: Installation of Redesign of Section 4 Tie-Back System**
**DATE**: April 20, 2025

gai consultants
transforming ideas into reality

**LABOR**

| JB COXWELL | | | | | | | |
|---|---|---|---|---|---|---|---|
| **POSITION** | **QTY.** | **UNIT** | **RATE** | **BURDENED RATE** | **EXTENDED COST** | **AMOUNT** | **COMMENT** |
| Superintendent-Burnette | 120 | Hours | $ 60.00 | | | $ 7,200.00 | Regular Time |
| Pile Driving Foreman-Bazile | 120 | Hours | $ 27.00 | | | $ 3,240.00 | Regular Time |
| Pile Drive-White | 120 | Hours | $ 24.50 | | | $ 2,940.00 | Regular Time |
| Carpenter-Griffin | 120 | Hours | $ 22.00 | | | $ 2,640.00 | Regular Time |
| Pile Driver-Johns | 120 | Hours | $ 22.00 | | | $ 2,640.00 | Regular Time |
| Welder-Cannon | 120 | Hours | $ 24.00 | | | $ 2,880.00 | |
| Operator-Lewis | 120 | Hours | $ 40.00 | | | $ 4,800.00 | |
| | | | | | | $ 26,340.00 | |
| | | | | 44.52% | | $ 11,726.57 | |
| | | | Mark-Up | 15.00% | | $ 5,709.99 | |
| **LABOR TOTAL** | | | | | | **$ 43,776.55** | |

**EQUIPMENT**

| JB COXWELL | QTY. | UNIT | RATE | BURDENED RATE | EXTENDED COST | AMOUNT | COMMENT |
|---|---|---|---|---|---|---|---|
| Manitowoc Crawler Crane | 120 | HRS. | $ 585.22 | | | $ 70,226.40 | |
| F-150 - Super Pick Up Truck | 120 | HRS. | $ 45.36 | | | $ 5,443.20 | |
| PVE VM Vibratory Hammer | 120 | HRS. | $ 207.89 | | | $ 24,946.80 | |
| Lincoln 500 Welding Machine | 120 | HRS. | $ 11.43 | | | $ 1,371.60 | |
| Excavator | 120 | HRS. | $ 117.14 | | | $ 14,056.80 | |
| Front End Loader | 120 | HRS. | $ 76.58 | | | $ 9,189.60 | |
| | | | Mark-Up | 15.00% | | $ 18,785.16 | |
| | | | | | | **$ 144,019.56** | |

**MATERIALS**

| JB COXWELL | PAY ITEM NUMBER | UNIT | | QUANTITY | UNIT PRICE | AMOUNT | COMMENT |
|---|---|---|---|---|---|---|---|
| Tie-Back Materials (JD Fields) | | L.S. | | 1 | | $102,045.93 | |
| | | | Sales Tax | 7.50% | | $ 7,653.44 | |
| | | | Mark-Up | 15.00% | | $ 16,454.91 | |
| **MATERIALS TOTAL** | | | | | | **$126,154.28** | |

**SUBCONTRACTORS**

| JB COXWELL | PAY ITEM NUMBER | UNIT | | QUANTITY | UNIT PRICE | AMOUNT | COMMENT: |
|---|---|---|---|---|---|---|---|
| | | | Mark-Up | 10.00% | | $0.00 | |
| | | | | | | $0.00 | |
| **TOTAL** | | | | | | **$0.00** | |
| **SUBTOTAL** | | | | | | **$ 313,950.39** | |
| **SUBTOTAL COST ESTIMATE** | | | | | | ***$ 313,950.39*** | |
| **BOND** | | | 0.53% | | | ***$ 1,663.94*** | |
| **TOTAL COST ESTIMATE** | | | | | | ***$315,614.33*** | |
| Prepared By: | | | | | | | |
| J.Carlton Padgett Jr. E.I., CGC | 4/20/2025 | | | | | | |
| Project Administrator | Date | | | | | | |
| GAI Consultants Inc. | | | | | | | |
| **JB Coxwell Price Quote** | | | | | | **$315,024.46** | |
| **GAI Engineer's Estimate** | | | | | | **$315,614.33** | |
| **DELTA** | | | | | | **$ (589.87)** | **0%** |

Docusign Envelope ID: F54DB230-A150-452A-B3F0-14C4A48C193C

# CONTRACTOR'S DOCUMENTATION

# CHANGE ORDER REQUEST #23

# SECTION 4 TIE-BACK REDESIGN

# MCCOY'S CREEK OUTFALL REALIGNMENT

# APRIL 20, 2025

Docusign Envelope ID: F54DB230-A150-452A-B3F0-14C4A48C193C

**J.B. Coxwell Contracting, Inc.**
6741 Lloyd Road West
Jacksonville, Florida 32254
Office (904) 786-1120 Fax (904) 783-2970

April 2, 2025

McCoy's Creek Channel Improvements
Installation of Redesigned Section 4 Tieback System

Carl Padgett
GAI Consultants
12574 Flagler Center Blvd
Suite 202
Jacksonville, FL 32258

Project Name: McCoy's Creek Channel Improvements
County: Duval
COJ Contract #: 70646-23
Re: Installation of Redesign Section 4 Tieback System

Dear Mr. Padgett:

JBCCI is requesting $315,024.46 for the furnishing and installation of the redesigned tieback system in Section 4. This redesign consisted of the installation of approximately 140 linear feet of steel sheet pile as well as a double channel waler and tie rods. The system was located along left and right wall. JBCCI respectfully requests that 12 days be added to the contract.

If you have any questions, please do not hesitate to contact me.

Respectfully,

**J. B. COXWELL CONTRACTING, INC.**

Garrett Harrison
Director of Structures

Docusign Envelope ID: F54DB230-A150-452A-B3F0-14C4A48C193C

**J. B. COXWELL CONTRACTING, INC.**
6741 Lloyd Road West, Jacksonville, FL 32254-1249
Telephone (904) 786-1120 * Fax (904) 783-2970

## FORCE ACCOUNT
## DAILY TIME REPORT

NAME: Carl Padgett GAI Consultants
MAILING ADDRESS: 12574 Flagler Center Blvd Suite 202
CITY: Jacksonville Fl. 32258

Date: November 11, 2024
Our Job No.: 2325
Location: Mccoy's Creek Channel Improvements

**Section 4 tie back installation**

Idle Equipment Rate Charged at 50% Blue Book Value

### LABOR

| EMP. NO. | | EMPLOYEE'S NAME | OCCUPATION | HOURS | RATE | AMOUNT |
|---|---|---|---|---|---|---|
| 1 | 6514 | Scott Brunette | Superintendent | 10.0 | $ 60.00 | $ 600.00 |
| 2 | 6388 | Victor Bazile | Foreman | 10.0 | $ 27.00 | $ 270.00 |
| 3 | 6580 | Rashuan White | Pile driver | 10.0 | $ 24.50 | $ 245.00 |
| 4 | 6613 | Christopher Griffin | Carpenter | 10.0 | $ 22.00 | $ 220.00 |
| 5 | 6515 | Caleb Johns | Pile driver | 10.0 | $ 22.00 | $ 220.00 |
| 6 | 6719 | Quantral Cannon | Welder | 10.0 | $ 24.00 | $ 240.00 |
| 7 | 6798 | Austin Lewis | Operator | 10.0 | $ 40.00 | $ 400.00 |
| 8 | | | | | | $ - |
| 9 | | | | | | $ - |
| 10 | | | | | | $ - |
| 11 | | | | | | $ - |
| | | | | SUBTOTAL | | $ 2,195.00 |
| | | | | BURDEN (44.52%) | | $ 977.21 |
| | | | | JBCCI MU 15.0% | | $ 475.83 |
| | | | | LABOR TOTAL | | $ 3,648.05 |

### EQUIPMENT

| EQUIP. NO. | | TYPE OF EQUIPMENT | HOURS | RATE | AMOUNT |
|---|---|---|---|---|---|
| 1 | | Manitowoc Crawler Crane 100T | 10.0 | $ 585.22 | $ 5,852.20 |
| 2 | TKP299 | F-150 Pickup Truck | 10.0 | $ 45.36 | $ 453.60 |
| 3 | BHC1899 | Excavator | 10.0 | $ 117.14 | $ 1,171.40 |
| 4 | LOW193 | Front End Loader | 10.0 | $ 76.59 | $ 765.90 |
| 5 | | PVE Vibro VM Hammer | 10.0 | $ 207.89 | $ 2,078.90 |
| 6 | | Lincoln Welder | 10.0 | $ 11.43 | $ 114.30 |
| 7 | | | | | $ - |
| 8 | | | | | $ - |
| 9 | | | | | $ - |
| | | | EQUIPMENT SUBTOTAL | | $ 10,436.20 |
| | | | JBCCI MU 15.0% | | $ 1,565.43 |
| | | | EQUIPMENT TOTAL | | $ 12,001.63 |

### MATERIALS

| | DESCRIPTION | QUANTITY | UNIT | PRICE | AMOUNT |
|---|---|---|---|---|---|
| 1 | Tieback Materials (JD Fields) | 1.00 | LS | $ 102,045.93 | $ 102,045.93 |
| | | | MATERIALS SUBTOTAL | | $ 102,045.93 |
| | | | Sales Tax (7.5%) | | $ 7,143.22 |
| | | | MATERIALS Mark Up (15.0%) | | $ 15,378.37 |
| | | | MATERIALS TOTAL | | $ 125,567.52 |

### SUBCONTRACTORS

| | DESCRIPTION | QUANTITY | UNIT | PRICE | AMOUNT |
|---|---|---|---|---|---|
| 1 | | | | | $ - |
| | | | SUBCONTRACTS SUBTOTAL | | $ - |
| | | | SUBCONTRACTS MU (10%) | | $ - |
| | | | SUBCONTRACTS TOTAL | | $ - |

DESCRIPTION OF WORK: Installation of Tie Back System in Section 4

| | | |
|---|---|---|
| SUBTOTAL | $ | 141,217.19 |
| 0.53% Bond | $ | 748.45 |
| **GRAND TOTAL** | **$** | **141,965.64** |

Report Submitted by: _____

Docusign Envelope ID: F54DB230-A150-452A-B3F0-14C4A48C193C

J. B. COXWELL CONTRACTING, INC.
6741 Lloyd Road West, Jacksonville, FL 32254-1249
Telephone (904) 786-1120 * Fax (904) 783-2970

**FORCE ACCOUNT**
**DAILY TIME REPORT**

NAME: Carl Padgett GAI Consultants
Date: November 12, 2024

MAILING ADDRESS: 12574 Flagler Center Blvd Suite 202
Our Job No.: 2325

CITY: Jacksonville Fl 32258
Location: Mccoy's Creek Channel Improvements

Section 4 tie back installation

Idle Equipment Rate Charged at 50% Blue Book Value

## LABOR

| EMP. NO. | | EMPLOYEE'S NAME | OCCUPATION | HOURS | RATE | AMOUNT |
|---|---|---|---|---|---|---|
| 1 | 6514 | Scott Brunette | Superintendent | 10.0 | $ 60.00 | $ 600.00 |
| 2 | 6386 | Victor Bazile | Foreman | 10.0 | $ 27.00 | $ 270.00 |
| 3 | 6568 | Rashuan White | Pile driver | 10.0 | $ 24.00 | $ 240.00 |
| 4 | 6613 | Christopher Griffin | Carpenter | 10.0 | $ 22.00 | $ 220.00 |
| 5 | 6515 | Caleb Johns | Pile driver | 10.0 | $ 22.00 | $ 220.00 |
| 6 | 6719 | Quantial Cannon | Welder | 10.0 | $ 24.00 | $ 240.00 |
| 7 | 6758 | Austin Lewis | Operator | 10.0 | $ 40.00 | $ 400.00 |
| 8 | | | | | | $ |
| 9 | | | | | | $ - |
| 10 | | | | | | $ - |
| 11 | | | | | | $ - |
| | | | | SUBTOTAL | | $ 2,195.00 |
| | | | | BURDEN (44.52%) | | $ 977.21 |
| | | | | JBCCI MU 15.0% | | $ 475.83 |
| | | | | LABOR TOTAL | | $ 3,648.05 |

## EQUIPMENT

| EQUIP. NO. | | TYPE OF EQUIPMENT | HOURS | RATE | AMOUNT |
|---|---|---|---|---|---|
| 1 | | Manitowoc Crawler Crane 160T | 10.0 | $ 585.22 | $ 5,852.20 |
| 2 | DXP259 | F-150 Pickup Truck | 10.0 | $ 45.36 | $ 453.60 |
| 3 | BRC1809 | Excavator | 10.0 | $ 117.14 | $ 1,171.40 |
| 4 | LOW003 | Front End Loader | 10.0 | $ 76.58 | $ 765.80 |
| 5 | | PVE Vibro VM Hammer | 10.0 | $ 207.89 | $ 2,078.90 |
| 6 | | Lincoln Welder | 10.0 | $ 11.43 | $ 114.30 |
| 7 | | | | | $ - |
| 8 | | | | | $ - |
| 9 | | | | | $ - |
| | | | EQUIPMENT SUBTOTAL | | $ 10,436.20 |
| | | | JBCCI MU 15.0% | | $ 1,565.43 |
| | | | EQUIPMENT TOTAL | | $ 12,001.63 |

## MATERIALS

| | DESCRIPTION | QUANTITY | UNIT | PRICE | AMOUNT |
|---|---|---|---|---|---|
| 1 | | | | | $ - |
| | | | MATERIALS SUBTOTAL | | $ - |
| | | | Sales Tax (7.5%) | | $ - |
| | | | MATERIALS Mark Up (15.0%) | | $ - |
| | | | MATERIALS TOTAL | | $ - |

## SUBCONTRACTORS

| | DESCRIPTION | QUANTITY | UNIT | PRICE | AMOUNT |
|---|---|---|---|---|---|
| 1 | | | | | $ - |
| | | | SUBCONTRACTS SUBTOTAL | | $ - |
| | | | SUBCONTRACTS MU (10%) | | $ - |
| | | | SUBCONTRACTS TOTAL | | $ - |

DESCRIPTION OF WORK: Installation of Tie Back System in Section 4

| | | |
|---|---|---|
| SUBTOTAL | $ | 15,649.68 |
| 0.53% Bond | $ | 82.94 |
| **GRAND TOTAL** | **$** | **15,732.62** |

Report Submitted by: _____

Docusign Envelope ID: F54DB230-A150-452A-B3F0-14C4A48C193C

J. B. COXWELL CONTRACTING, INC.
6741 Lloyd Road West, Jacksonville, FL 32254-1249
Telephone (904) 786-1120 * Fax (904) 783-2970

**FORCE ACCOUNT**
**DAILY TIME REPORT**

NAME: Carl Padgett GAI Consultants
Date: November 13, 2024

MAILING ADDRESS: 12574 Flegler Center Blvd Suite 202
Our Job No.: 2325

CITY: Jacksonville Fl. 32258
Location: Mccoy's Creek Channel Improvements

Section 4 tie back installation

Idle Equipment Rate Charged at 50% Blue Book Value

## LABOR

| EMP. NO. | | EMPLOYEE'S NAME | OCCUPATION | HOURS | RATE | AMOUNT |
|---|---|---|---|---|---|---|
| 1 | 6514 | Scott Brunette | Superintendent | 10.0 | $ 60.00 | $ 600.00 |
| 2 | 6386 | Victor Bazde | Foreman | 10.0 | $ 27.00 | $ 270.00 |
| 3 | 6568 | Rashuan White | Pile driver | 10.0 | $ 24.50 | $ 245.00 |
| 4 | 6613 | Christopher Griffin | Carpenter | 10.0 | $ 22.00 | $ 220.00 |
| 5 | 6515 | Caleb Jones | Pile driver | 10.0 | $ 22.00 | $ 220.00 |
| 6 | 6719 | Quamrai Carulon | Welder | 10.0 | $ 24.00 | $ 240.00 |
| 7 | 6788 | Austin Lewis | Operator | 10.0 | $ 40.00 | $ 400.00 |
| 8 | | | | | | $ - |
| 9 | | | | | | $ |
| 10 | | | | | | $ - |
| 11 | | | | | | $ - |
| | | | | SUBTOTAL | | $ 2,195.00 |
| | | | | BURDEN (44.52%) | | $ 977.21 |
| | | | | JBCCI MU 15.0% | | $ 475.83 |
| | | | | LABOR TOTAL | | $ 3,648.05 |

## EQUIPMENT

| EQUIP. NO. | | TYPE OF EQUIPMENT | HOURS | RATE | AMOUNT |
|---|---|---|---|---|---|
| 1 | | Manitowoc Crawler Crane 100T | 10.0 | $ 585.22 | $ 5,852.20 |
| 2 | TKP299 | F-150 Pickup Truck | 10.0 | $ 45.36 | $ 453.60 |
| 3 | BrC1899 | Excavator | 10.0 | $ 117.14 | $ 1,171.40 |
| 4 | LCW103 | Front End Loader | 10.0 | $ 76.58 | $ 765.80 |
| 5 | | PVE Vibro VM5 Hammer | 10.0 | $ 207.69 | $ 2,076.90 |
| 6 | | Lincoln Welder | 10.0 | $ 11.43 | $ 114.30 |
| 7 | | | | | $ - |
| 8 | | | | | $ - |
| 9 | | | | | $ - |
| | | | EQUIPMENT SUBTOTAL | | $ 10,436.20 |
| | | | JBCCI MU 15.0% | | $ 1,565.43 |
| | | | EQUIPMENT TOTAL | | $ 12,001.63 |

## MATERIALS

| | DESCRIPTION | QUANTITY | UNIT | PRICE | AMOUNT |
|---|---|---|---|---|---|
| 1 | | | | | $ - |
| | | | MATERIALS SUBTOTAL | | $ - |
| | | | Sales Tax (7.5%) | | $ - |
| | | | MATERIALS Mark Up (15.0%) | | $ - |
| | | | MATERIALS TOTAL | | $ - |

## SUBCONTRACTORS

| | DESCRIPTION | QUANTITY | UNIT | PRICE | AMOUNT |
|---|---|---|---|---|---|
| 1 | | | | | $ - |
| | | | SUBCONTRACTS SUBTOTAL | | $ - |
| | | | SUBCONTRACTS MU (10%) | | $ - |
| | | | SUBCONTRACTS TOTAL | | $ - |

DESCRIPTION OF WORK: Installation of Tie Back System in Section 4

| | | |
|---|---|---|
| SUBTOTAL | $ | 15,649.68 |
| 0.53% Bond | $ | 82.94 |
| **GRAND TOTAL** | **$** | **15,732.62** |

Report Submitted by: _____

Docusign Envelope ID: F54DB230-A150-452A-B3F0-14C4A48C193C

**J. B. COXWELL CONTRACTING, INC.**
6741 Lloyd Road West, Jacksonville, FL 32254-1249
Telephone (904) 786-1120 * Fax (904) 783-2970

## FORCE ACCOUNT
## DAILY TIME REPORT

NAME: Carl Padgett GAI Consultants
MAILING ADDRESS: 12574 Flagler Center Blvd Suite 202
CITY: Jacksonville Fl. 32258

Date: November 14, 2024
Our Job No.: 2325
Location: Mccoy's Creek Channel Improvements

Section 4 tie back installation

Idle Equipment Rate Charged at 50% Blue Book Value

### LABOR

| EMP. NO. | | EMPLOYEE'S NAME | OCCUPATION | HOURS | RATE | AMOUNT |
|---|---|---|---|---|---|---|
| 1 | 6514 | Scott Brunette | Superintendent | 10.0 | $ 60.00 | $ 600.00 |
| 2 | 6385 | Victor Bazile | Foreman | 10.0 | $ 27.00 | $ 270.00 |
| 3 | 6568 | Rashaan White | Pile driver | 10.0 | $ 24.50 | $ 245.00 |
| 4 | 6513 | Christopher Griffin | Carpenter | 10.0 | $ 22.00 | $ 220.00 |
| 5 | 6515 | Caleb Johns | Pile driver | 10.0 | $ 22.00 | $ 220.00 |
| 6 | 6719 | Quantral Common | Welder | 10.0 | $ 24.00 | $ 240.00 |
| 7 | 6798 | Austin Lewis | Operator | 10.0 | $ 40.00 | $ 400.00 |
| 8 | | | | | | $ |
| 9 | | | | | | $ - |
| 10 | | | | | | $ - |
| 11 | | | | | | $ - |
| | | | | SUBTOTAL | | $ 2,195.00 |
| | | | | BURDEN (44.52%) | | $ 977.21 |
| | | | | JBCCI MU 15.0% | | $ 475.83 |
| | | | | LABOR TOTAL | | $ 3,648.05 |

### EQUIPMENT

| EQUIP. NO. | | TYPE OF EQUIPMENT | HOURS | RATE | AMOUNT |
|---|---|---|---|---|---|
| 1 | | Manitowoc Crawler Crane 1001 | 10.0 | $ 585.23 | $ 5,852.30 |
| 2 | TKP299 | F-150 Pickup Truck | 10.0 | $ 45.36 | $ 453.60 |
| 3 | BHC1898 | Excavator | 10.0 | $ 117.14 | $ 1,171.40 |
| 4 | LOW103 | Front End Loader | 10.0 | $ 76.59 | $ 765.90 |
| 5 | | PVE Vibro VM Hammer | 10.0 | $ 207.89 | $ 2,078.90 |
| 6 | | Lincoln Welder | 10.0 | $ 11.43 | $ 114.30 |
| 7 | | | | | $ - |
| 8 | | | | | $ - |
| 9 | | | | | $ - |
| | | | EQUIPMENT SUBTOTAL | | $ 10,436.20 |
| | | | JBCCI MU 15.0% | | $ 1,565.43 |
| | | | EQUIPMENT TOTAL | | $ 12,001.63 |

### MATERIALS

| | DESCRIPTION | QUANTITY | UNIT | PRICE | AMOUNT |
|---|---|---|---|---|---|
| 1 | | | | | $ - |
| | | | MATERIALS SUBTOTAL | | $ - |
| | | | Sales Tax (7.5%) | | $ - |
| | | | MATERIALS Mark Up (15.0%) | | $ - |
| | | | MATERIALS TOTAL | | $ - |

### SUBCONTRACTORS

| | DESCRIPTION | QUANTITY | UNIT | PRICE | AMOUNT |
|---|---|---|---|---|---|
| 1 | | | | | $ - |
| | | | SUBCONTRACTS SUBTOTAL | | $ - |
| | | | SUBCONTRACTS MU (10%) | | $ - |
| | | | SUBCONTRACTS TOTAL | | $ - |

DESCRIPTION OF WORK: Installation of Tie Back System in Section 4

| | | |
|---|---|---|
| SUBTOTAL | $ | 15,649.68 |
| 0.53% Bond | $ | 82.94 |
| **GRAND TOTAL** | **$** | **15,732.62** |

Report Submitted by: _____

Docusign Envelope ID: F54DB230-A150-452A-B3F0-14C4A48C193C

**J. B. COXWELL CONTRACTING, INC.**
6741 Lloyd Road West, Jacksonville, FL 32254-1249
Telephone (904) 786-1120 * Fax (904) 783-2970

## FORCE ACCOUNT
## DAILY TIME REPORT

NAME: Carl Padgett GAI Consultants
Date: December 2, 2024
MAILING ADDRESS: 12574 Flagler Center Blvd Suite 202
Our Job No.: 2325
CITY: Jacksonville Fl 32258
Location: Mccoy's Creek Channel Improvements

Section 4 tie back installation

Idle Equipment Rate Charged at 50% Blue Book Value

### LABOR

| EMP. NO. | | EMPLOYEE'S NAME | OCCUPATION | HOURS | RATE | AMOUNT |
|---|---|---|---|---|---|---|
| 1 | 6514 | Scott Brunette | Superintendent | 10.0 | $ 60.00 | $ 600.00 |
| 2 | 6386 | Victor Bazile | Foreman | 10.0 | $ 27.00 | $ 270.00 |
| 3 | 6588 | Rashaan Wilds | Pile driver | 10.0 | $ 24.50 | $ 245.00 |
| 4 | 6613 | Christopher Griffin | Carpenter | 10.0 | $ 22.00 | $ 220.00 |
| 5 | 6515 | Caleb Jones | Pile driver | 10.0 | $ 22.00 | $ 220.00 |
| 6 | 6719 | Deantral Cannon | Welder | 10.0 | $ 24.00 | $ 240.00 |
| 7 | 6798 | Austin Lewis | Operator | 10.0 | $ 40.00 | $ 400.00 |
| 8 | | | | | | $ - |
| 9 | | | | | | $ - |
| 10 | | | | | | $ - |
| 11 | | | | | | $ - |
| | | | | SUBTOTAL | | $ 2,195.00 |
| | | | | BURDEN (44.52%) | | $ 977.21 |
| | | | | JBCCI MU 15.0% | | $ 475.83 |
| | | | | LABOR TOTAL | | $ 3,648.05 |

### EQUIPMENT

| EQUIP. NO. | | TYPE OF EQUIPMENT | HOURS | RATE | AMOUNT |
|---|---|---|---|---|---|
| 1 | | Manitowoc Crawler Crane 1001 | 10.0 | $ 585.22 | $ 5,852.20 |
| 2 | TKP209 | F-150 Pickup Truck | 10.0 | $ 45.36 | $ 453.60 |
| 3 | BHC1899 | Excavator | 10.0 | $ 117.14 | $ 1,171.40 |
| 4 | LOW103 | Front End Loader | 10.0 | $ 76.58 | $ 765.80 |
| 5 | | PVE Vibro VM Hammer | 10.0 | $ 207.69 | $ 2,076.90 |
| 6 | | Lincoln Welder | 10.0 | $ 11.43 | $ 114.30 |
| 7 | | | | | $ - |
| 8 | | | | | $ - |
| 9 | | | | | $ - |
| | | | EQUIPMENT SUBTOTAL | | $ 10,436.20 |
| | | | JBCCI MU 15.0% | | $ 1,565.43 |
| | | | EQUIPMENT TOTAL | | $ 12,001.63 |

### MATERIALS

| | DESCRIPTION | QUANTITY | UNIT | PRICE | AMOUNT |
|---|---|---|---|---|---|
| 1 | | | | | $ - |
| | | | MATERIALS SUBTOTAL | | $ - |
| | | | Sales Tax (7.5%) | | $ - |
| | | | MATERIALS Mark Up (15.0%) | | $ - |
| | | | MATERIALS TOTAL | | $ - |

### SUBCONTRACTORS

| | DESCRIPTION | QUANTITY | UNIT | PRICE | AMOUNT |
|---|---|---|---|---|---|
| 1 | | | | | $ - |
| | | | SUBCONTRACTS SUBTOTAL | | $ - |
| | | | SUBCONTRACTS MU (10%) | | $ - |
| | | | SUBCONTRACTS TOTAL | | $ - |

DESCRIPTION OF WORK: Installation of Tie Back System in Section 4

| | | |
|---|---|---|
| SUBTOTAL | $ | 15,649.68 |
| 0.53% Bond | $ | 82.94 |
| **GRAND TOTAL** | **$** | **15,732.62** |

Report Submitted by: _____

Docusign Envelope ID: F54DB230-A150-452A-B3F0-14C4A48C193C

**J. B. COXWELL CONTRACTING, INC.**
6741 Lloyd Road West, Jacksonville, FL 32254-1249
Telephone (904) 786-1120 * Fax (904) 783-2970

**FORCE ACCOUNT**
**DAILY TIME REPORT**

NAME: Carl Padgett GAI Consultants
Date: December 3, 2024
MAILING ADDRESS: 12574 Flagler Center Blvd Suite 202
Our Job No.: 2325
CITY: Jacksonville Fl. 32258
Location: Mccoy's Creek Channel Improvements

Section 4 tie back installation

Idle Equipment Rate Charged at 50% Blue Book Value

## LABOR

| EMP. NO. | | EMPLOYEE'S NAME | OCCUPATION | HOURS | RATE | AMOUNT |
|---|---|---|---|---|---|---|
| 1 | 6514 | Scott Brunette | Superintendent | 10.0 | $ 50.00 | $ 500.00 |
| 2 | 6306 | Victor Bazile | Foreman | 10.0 | $ 27.00 | $ 270.00 |
| 3 | 6588 | Rashaan Wilde | Pile driver | 10.0 | $ 24.50 | $ 245.00 |
| 4 | 6613 | Christopher Griffin | Carpenter | 10.0 | $ 22.00 | $ 220.00 |
| 5 | 6515 | Corey Jones | Pile driver | 10.0 | $ 22.00 | $ 220.00 |
| 6 | 6719 | Quantrel Cannon | Welder | 10.0 | $ 24.00 | $ 240.00 |
| 7 | 6790 | Austin Lewis | Operator | 10.0 | $ 40.00 | $ 400.00 |
| 8 | | | | | | $ - |
| 9 | | | | | | $ - |
| 10 | | | | | | $ - |
| 11 | | | | | | $ - |
| | | | | SUBTOTAL | | $ 2,195.00 |
| | | | | BURDEN (44.52%) | | $ 977.21 |
| | | | | JBCCI MU 15.0% | | $ 475.83 |
| | | | | LABOR TOTAL | | $ 3,648.05 |

## EQUIPMENT

| EQUIP. NO. | | TYPE OF EQUIPMENT | HOURS | RATE | AMOUNT |
|---|---|---|---|---|---|
| 1 | | Manitowoc Crawler Crane 100T | 10.0 | $ 586.22 | $ 5,862.20 |
| 2 | TKP295 | F-150 Pickup Truck | 10.0 | $ 45.36 | $ 453.60 |
| 3 | BHC1899 | Excavator | 10.0 | $ 117.14 | $ 1,171.40 |
| 4 | LOW103 | Front End Loader | 10.0 | $ 78.58 | $ 785.80 |
| 5 | | PVE Vibro VM Hammer | 10.0 | $ 207.89 | $ 2,078.90 |
| 6 | | Lincoln Welder | 10.0 | $ 11.43 | $ 114.30 |
| 7 | | | | | $ - |
| 8 | | | | | $ - |
| 9 | | | | | $ - |
| | | | EQUIPMENT SUBTOTAL | | $ 10,436.20 |
| | | | JBCCI MU 15.0% | | $ 1,565.43 |
| | | | EQUIPMENT TOTAL | | $ 12,001.63 |

## MATERIALS

| | DESCRIPTION | QUANTITY | UNIT | PRICE | AMOUNT |
|---|---|---|---|---|---|
| 1 | | | | | $ - |
| | | | MATERIALS SUBTOTAL | | $ - |
| | | | Sales Tax (7.5%) | | $ - |
| | | | MATERIALS Mark Up (15.0%) | | $ - |
| | | | MATERIALS TOTAL | | $ - |

## SUBCONTRACTORS

| | DESCRIPTION | QUANTITY | UNIT | PRICE | AMOUNT |
|---|---|---|---|---|---|
| 1 | | | | | $ - |
| | | | SUBCONTRACTS SUBTOTAL | | $ - |
| | | | SUBCONTRACTS MU (10%) | | $ - |
| | | | SUBCONTRACTS TOTAL | | $ - |

DESCRIPTION OF WORK: Installation of Tie Back System in Section 4

| | | |
|---|---|---|
| SUBTOTAL | $ | 15,649.68 |
| 0.53% Bond | $ | 82.94 |
| **GRAND TOTAL** | **$** | **15,732.62** |

Report Submitted by: _____

Docusign Envelope ID: F54DB230-A150-452A-B3F0-14C4A48C193C

J. B. COXWELL CONTRACTING, INC.
6741 Lloyd Road West, Jacksonville, FL 32254-1249
Telephone (904) 786-1120 * Fax (904) 783-2970

**FORCE ACCOUNT**
**DAILY TIME REPORT**

NAME: Carl Padgett GAI Consultants
Date: December 4, 2024

MAILING ADDRESS: 12574 Flagler Center Blvd Suite 202
Our Job No.: 2325

CITY: Jacksonville Fl 32258
Location: Mccoy's Creek Channel Improvements

Section 4 tie back installation

Idle Equipment Rate Charged at 50% Blue Book Value

## LABOR

| EMP NO. | | EMPLOYEE'S NAME | OCCUPATION | HOURS | RATE | AMOUNT |
|---|---|---|---|---|---|---|
| 1 | 6514 | Scott Brunette | Superintendent | 10.0 | $ 60.00 | $ 600.00 |
| 2 | 6366 | Victor Bazile | Foreman | 10.0 | $ 27.00 | $ 270.00 |
| 3 | 6583 | Rashuan White | Pile driver | 10.0 | $ 24.50 | $ 245.00 |
| 4 | 6613 | Christopher Griffin | Carpenter | 10.0 | $ 22.00 | $ 220.00 |
| 5 | 6515 | Caleb Johns | Pile driver | 10.0 | $ 22.00 | $ 220.00 |
| 6 | 6719 | Quardrel Cannon | Welder | 10.0 | $ 24.00 | $ 240.00 |
| 7 | 6798 | Austin Lewis | Operator | 10.0 | $ 40.00 | $ 400.00 |
| 8 | | | | | | $ - |
| 9 | | | | | | $ - |
| 10 | | | | | | $ - |
| 11 | | | | | | $ - |
| | | | | SUBTOTAL | | $ 2,195.00 |
| | | | | BURDEN (44.52%) | | $ 977.21 |
| | | | | JBCCI MU 15.0% | | $ 475.83 |
| | | | | LABOR TOTAL | | $ 3,648.05 |

## EQUIPMENT

| EQUIP. NO. | | TYPE OF EQUIPMENT | HOURS | RATE | AMOUNT |
|---|---|---|---|---|---|
| 1 | | Manitowoc Crawler Crane 1001 | 10.0 | $ 585.22 | $ 5,852.20 |
| 2 | TKP299 | F-150 Pickup Truck | 10.0 | $ 45.30 | $ 453.00 |
| 3 | REC1885 | Excavator | 10.0 | $ 117.34 | $ 1,173.40 |
| 4 | LOW103 | Front End Loader | 10.0 | $ 76.58 | $ 765.80 |
| 5 | | PVE Vibro V36 Hammer | 10.0 | $ 207.89 | $ 2,078.90 |
| 6 | | Lincoln Welder | 10.0 | $ 11.43 | $ 114.30 |
| 7 | | | | | $ - |
| 8 | | | | | $ - |
| 9 | | | | | $ - |
| | | | EQUIPMENT SUBTOTAL | | $ 10,436.20 |
| | | | JBCCI MU 15.0% | | $ 1,565.43 |
| | | | EQUIPMENT TOTAL | | $ 12,001.63 |

## MATERIALS

| | DESCRIPTION | QUANTITY | UNIT | PRICE | AMOUNT |
|---|---|---|---|---|---|
| 1 | | | | | $ - |
| | | | MATERIALS SUBTOTAL | | $ - |
| | | | Sales Tax (7.5%) | | $ - |
| | | | MATERIALS Mark Up (15.0%) | | $ - |
| | | | MATERIALS TOTAL | | $ - |

## SUBCONTRACTORS

| DESCRIPTION | QUANTITY | UNIT | PRICE | AMOUNT |
|---|---|---|---|---|
| 1 | | | | $ - |
| | | SUBCONTRACTS SUBTOTAL | | $ - |
| | | SUBCONTRACTS MU (10%) | | $ - |
| | | SUBCONTRACTS TOTAL | | $ - |

DESCRIPTION OF WORK: Installation of Tie Back System in Section 4

| | | |
|---|---|---|
| SUBTOTAL | $ | 15,649.68 |
| 0.53% Bond | $ | 82.94 |
| **GRAND TOTAL** | **$** | **15,732.62** |

Report Submitted by: _____

Docusign Envelope ID: F54DB230-A150-452A-B3F0-14C4A48C193C

J. B. COXWELL CONTRACTING, INC.
6741 Lloyd Road West, Jacksonville, FL 32254-1249
Telephone (904) 786-1120 * Fax (904) 783-2970

**FORCE ACCOUNT**
**DAILY TIME REPORT**

NAME: Carl Padgett GAI Consultants
Date: December 5, 2024

MAILING ADDRESS: 12574 Flagler Center Blvd Suite 202
Our Job No.: 2325

CITY: Jacksonville Fl, 32258
Location: Mccoy's Creek Channel Improvements

Section 4 tie back installation

Idle Equipment Rate Charged at 50% Blue Book Value

## LABOR

| EMP. NO. | | EMPLOYEE'S NAME | OCCUPATION | HOURS | RATE | AMOUNT |
|---|---|---|---|---|---|---|
| 1 | 6514 | Scott Brunette | Superintendent | 10.0 | $ 60.00 | $ 600.00 |
| 2 | 6386 | Victor Bazile | Foreman | 10.0 | $ 27.00 | $ 270.00 |
| 3 | 6566 | Rashuan White | Pile driver | 10.0 | $ 24.50 | $ 245.00 |
| 4 | 6613 | Christopher Griffin | Carpenter | 10.0 | $ 22.00 | $ 220.00 |
| 5 | 6515 | Calep Johns | Pile driver | 10.0 | $ 22.00 | $ 220.00 |
| 6 | 6719 | Quantrell Carrion | Welder | 10.0 | $ 24.00 | $ 240.00 |
| 7 | 6798 | Austin Lewis | Operator | 10.0 | $ 40.00 | $ 400.00 |
| 8 | | | | | | $ - |
| 9 | | | | | | $ - |
| 10 | | | | | | $ - |
| 11 | | | | | | $ - |
| | | | | SUBTOTAL | | $ 2,195.00 |
| | | | | BURDEN (44.52%) | | $ 977.21 |
| | | | | JBCCI MU 15.0% | | $ 475.83 |
| | | | | LABOR TOTAL | | $ 3,648.05 |

## EQUIPMENT

| EQUIP. NO. | | TYPE OF EQUIPMENT | HOURS | RATE | AMOUNT |
|---|---|---|---|---|---|
| 1 | | Manitowoc Crawler Crane 130T | 10.0 | $ 585.22 | $ 5,852.20 |
| 2 | DKP299 | F-150 Pickup Truck | 10.0 | $ 45.30 | $ 453.00 |
| 3 | DRC1899 | Excavator | 10.0 | $ 117.14 | $ 1,171.40 |
| 4 | LOW103 | Front End Loader | 10.0 | $ 76.50 | $ 765.00 |
| 5 | | PVE Vibro VM Hammer | 10.0 | $ 207.89 | $ 2,078.90 |
| 6 | | Lincoln Welder | 10.0 | $ 11.43 | $ 114.30 |
| 7 | | | | | $ - |
| 8 | | | | | $ - |
| 9 | | | | | $ - |
| | | | EQUIPMENT SUBTOTAL | | $ 10,435.20 |
| | | | JBCCI MU 15.0% | | $ 1,565.43 |
| | | | EQUIPMENT TOTAL | | $ 12,001.63 |

## MATERIALS

| | DESCRIPTION | QUANTITY | UNIT | PRICE | AMOUNT |
|---|---|---|---|---|---|
| 1 | | | | | $ - |
| | | | MATERIALS SUBTOTAL | | $ - |
| | | | Sales Tax (7.5%) | | $ - |
| | | | MATERIALS Mark Up (15.0%) | | $ - |
| | | | MATERIALS TOTAL | | $ - |

## SUBCONTRACTORS

| | DESCRIPTION | QUANTITY | UNIT | PRICE | AMOUNT |
|---|---|---|---|---|---|
| 1 | | | | | $ - |
| | | | SUBCONTRACTS SUBTOTAL | | $ - |
| | | | SUBCONTRACTS MU (10%) | | $ - |
| | | | SUBCONTRACTS TOTAL | | $ - |

DESCRIPTION OF WORK: Installation of Tie Back System in Section 4

| | | |
|---|---|---|
| SUBTOTAL | $ | 15,649.68 |
| 0.53% Bond | $ | 82.94 |
| **GRAND TOTAL** | **$** | **15,732.62** |

Report Submitted by:

Docusign Envelope ID: F54DB230-A150-452A-B3F0-14C4A48C193C

J. B. COXWELL CONTRACTING, INC.
6741 Lloyd Road West, Jacksonville, FL 32254-1249
Telephone (904) 786-1120 * Fax (904) 783-2970

**FORCE ACCOUNT**
**DAILY TIME REPORT**

NAME: Carl Padgett GAI Consultants
Date: December 6, 2024

MAILING ADDRESS: 12574 Flagler Center Blvd Suite 202
Our Job No.: 2325

CITY: Jacksonville Fl 32258
Location: Mccoy's Creek Channel Improvements

Section 4 tie back installation

Idle Equipment Rate Charged at 50% Blue Book Value

## LABOR

| EMP. NO. | | EMPLOYEE'S NAME | OCCUPATION | HOURS | RATE | AMOUNT |
|---|---|---|---|---|---|---|
| 1 | 6514 | Scott Brunette | Superintendent | 10.0 | $ 60.00 | $ 600.00 |
| 2 | 6386 | Victor Bazile | Foreman | 10.0 | $ 27.00 | $ 270.00 |
| 3 | 6588 | Rashuan White | Pile driver | 10.0 | $ 24.60 | $ 246.00 |
| 4 | 6613 | Christopher Griffin | Carpenter | 10.0 | $ 22.00 | $ 220.00 |
| 5 | 6515 | Caleb Jones | Pile driver | 10.0 | $ 22.00 | $ 220.00 |
| 6 | 6719 | Quantrell Cannon | Welder | 10.0 | $ 24.00 | $ 240.00 |
| 7 | 6795 | Austin Lewis | Operator | 10.0 | $ 40.00 | $ 400.00 |
| 8 | | | | | | $ - |
| 9 | | | | | | $ - |
| 10 | | | | | | $ - |
| 11 | | | | | | $ - |
| | | | | SUBTOTAL | | $ 2,195.00 |
| | | | | BURDEN (44.52%) | | $ 977.21 |
| | | | | JBCCI MU 15.0% | | $ 475.83 |
| | | | | LABOR TOTAL | | $ 3,648.05 |

## EQUIPMENT

| EQUIP. NO. | | TYPE OF EQUIPMENT | HOURS | RATE | AMOUNT |
|---|---|---|---|---|---|
| 1 | | Manitowoc Crawler Crane 100T | 10.0 | $ 585.22 | $ 5,852.20 |
| 2 | TKP299 | F-150 Pickup Truck | 10.0 | $ 45.36 | $ 453.60 |
| 3 | BHC1869 | Excavator | 10.0 | $ 117.14 | $ 1,171.40 |
| 4 | LOW103 | Front End Loader | 10.0 | $ 76.50 | $ 765.00 |
| 5 | | PVE Vibro VM Hammer | 10.0 | $ 207.89 | $ 2,078.90 |
| 6 | | Lincoln Welder | 10.0 | $ 11.43 | $ 114.30 |
| 7 | | | | | $ - |
| 8 | | | | | $ - |
| 9 | | | | | $ - |
| | | | EQUIPMENT SUBTOTAL | | $ 10,436.20 |
| | | | JBCCI MU 15.0% | | $ 1,565.43 |
| | | | EQUIPMENT TOTAL | | $ 12,001.63 |

## MATERIALS

| | DESCRIPTION | QUANTITY | UNIT | PRICE | AMOUNT |
|---|---|---|---|---|---|
| 1 | | | | | $ - |
| | | | MATERIALS SUBTOTAL | | $ - |
| | | | Sales Tax (7.5%) | | $ - |
| | | | MATERIALS Mark Up (15.0%) | | $ - |
| | | | MATERIALS TOTAL | | $ - |

## SUBCONTRACTORS

| | DESCRIPTION | QUANTITY | UNIT | PRICE | AMOUNT |
|---|---|---|---|---|---|
| 1 | | | | | $ - |
| | | | SUBCONTRACTS SUBTOTAL | | $ - |
| | | | SUBCONTRACTS MU (10%) | | $ - |
| | | | SUBCONTRACTS TOTAL | | $ - |

DESCRIPTION OF WORK: Installation of Tie Back System in Section 4

| | | |
|---|---|---|
| SUBTOTAL | $ | 15,649.68 |
| 0.53% Bond | $ | 82.94 |
| **GRAND TOTAL** | **$** | **15,732.62** |

Report Submitted by: _____

Docusign Envelope ID: F54DB230-A150-452A-B3F0-14C4A48C193C

**J. B. COXWELL CONTRACTING, INC.**
6741 Lloyd Road West, Jacksonville, FL 32254-1249
Telephone (904) 786-1120 * Fax (904) 783-2970

**FORCE ACCOUNT**
**DAILY TIME REPORT**

NAME: Carl Padgett GAI Consultants
Date: December 7, 2024

MAILING ADDRESS: 12574 Flagler Center Blvd Suite 202
Our Job No.: 2325

CITY: Jacksonville Fl. 32258
Location: Mccoy's Creek Channel Improvements

Section 4 tie back installation

Idle Equipment Rate Charged at 50% Blue Book Value

## LABOR

| EMP. NO. | | EMPLOYEE'S NAME | OCCUPATION | HOURS | RATE | AMOUNT |
|---|---|---|---|---|---|---|
| 1 | 6574 | Scott Brunette | Superintendent | 10.0 | $ 60.00 | $ 600.00 |
| 2 | 5386 | Victor Bazire | Foreman | 10.0 | $ 27.00 | $ 270.00 |
| 3 | 6568 | Rashuan White | Pile driver | 10.0 | $ 24.50 | $ 245.00 |
| 4 | 6613 | Christopher Griffin | Carpenter | 10.0 | $ 22.00 | $ 220.00 |
| 5 | 5515 | Caleb Johns | Pile driver | 10.0 | $ 22.00 | $ 220.00 |
| 6 | 6719 | Quantral Cannon | Welder | 10.0 | $ 24.00 | $ 240.00 |
| 7 | 5798 | Austin Lewis | Operator | 10.0 | $ 40.00 | $ 400.00 |
| 8 | | | | | | $ - |
| 9 | | | | | | $ - |
| 10 | | | | | | $ - |
| 11 | | | | | | $ - |
| | | | | SUBTOTAL | | $ 2,195.00 |
| | | | | BURDEN (44.52%) | | $ 977.21 |
| | | | | JBCCI MU 15.0% | | $ 475.83 |
| | | | | LABOR TOTAL | | $ 3,648.05 |

## EQUIPMENT

| EQUIP. NO. | | TYPE OF EQUIPMENT | HOURS | RATE | AMOUNT |
|---|---|---|---|---|---|
| 1 | | Manitowoc Crawler Crane 100T | 10.0 | $ 585.22 | $ 5,852.20 |
| 2 | TKP299 | F-150 Pickup Truck | 10.0 | $ 45.36 | $ 453.60 |
| 3 | BI4C1899 | Excavator | 10.0 | $ 117.14 | $ 1,171.40 |
| 4 | LOW103 | Front End Loader | 10.0 | $ 76.58 | $ 765.80 |
| 5 | | PVE Vibro VM Hammer | 10.0 | $ 207.89 | $ 2,078.90 |
| 6 | | Lincoln Welder | 10.0 | $ 11.43 | $ 114.30 |
| 7 | | | | | $ - |
| 8 | | | | | $ - |
| 9 | | | | | $ - |
| | | | EQUIPMENT SUBTOTAL | | $ 10,436.20 |
| | | | JBCCI MU 15.0% | | $ 1,565.43 |
| | | | EQUIPMENT TOTAL | | $ 12,001.63 |

## MATERIALS

| | DESCRIPTION | QUANTITY | UNIT | PRICE | AMOUNT |
|---|---|---|---|---|---|
| 1 | | | | | $ - |
| | | | MATERIALS SUBTOTAL | | $ - |
| | | | Sales Tax (7.5%) | | $ - |
| | | | MATERIALS Mark Up (15.0%) | | $ - |
| | | | MATERIALS TOTAL | | $ - |

## SUBCONTRACTORS

| DESCRIPTION | QUANTITY | UNIT | PRICE | AMOUNT |
|---|---|---|---|---|
| 1 | | | | $ - |
| | | SUBCONTRACTS SUBTOTAL | | $ - |
| | | SUBCONTRACTS MU (10%) | | $ - |
| | | SUBCONTRACTS TOTAL | | $ - |

DESCRIPTION OF WORK: Installation of Tie Back System in Section 4

| | | |
|---|---|---|
| SUBTOTAL | $ | 15,649.68 |
| 0.53% Bond | $ | 82.94 |
| **GRAND TOTAL** | **$** | **15,732.62** |

Report Submitted by:

Docusign Envelope ID: F54DB230-A150-452A-B3F0-14C4A48C193C

J. B. COXWELL CONTRACTING, INC.
6741 Lloyd Road West, Jacksonville, FL 32254-1249
Telephone (904) 786-1120 * Fax (904) 783-2970

**FORCE ACCOUNT**
**DAILY TIME REPORT**

NAME: Carl Padgett GAI Consultants
Date: December 9, 2024
MAILING ADDRESS: 12574 Flagler Center Blvd Suite 202
Our Job No.: 2325
CITY: Jacksonville FL 32258
Location: Mccoy's Creek Channel Improvements

Section 4 tie back Installation

Idle Equipment Rate Charged at 50% Blue Book Value

## LABOR

| EMP. NO. | | EMPLOYEE'S NAME | OCCUPATION | HOURS | RATE | AMOUNT |
|---|---|---|---|---|---|---|
| 1 | 6514 | Scott Brunette | Superintendent | 10.0 | $ 68.00 | $ 680.00 |
| 2 | 6386 | Victor Bazile | Foreman | 10.0 | $ 27.00 | $ 270.00 |
| 3 | 6568 | Rashuan White | Pile driver | 10.0 | $ 24.50 | $ 245.00 |
| 4 | 6613 | Christopher Griffin | Carpenter | 10.0 | $ 22.00 | $ 220.00 |
| 5 | 6515 | Caleb Johns | Pile driver | 10.0 | $ 22.00 | $ 220.00 |
| 6 | 6719 | Quantrel Cannon | Welder | 10.0 | $ 24.00 | $ 240.00 |
| 7 | 6798 | Austin Lewis | Operator | 10.0 | $ 40.00 | $ 400.00 |
| 8 | | | | | | $ - |
| 9 | | | | | | $ - |
| 10 | | | | | | $ - |
| 11 | | | | | | $ - |
| | | | | SUBTOTAL | | $ 2,195.00 |
| | | | | BURDEN (44.52%) | | $ 977.21 |
| | | | | JBCCI MU 15.0% | | $ 475.83 |
| | | | | LABOR TOTAL | | $ 3,648.05 |

## EQUIPMENT

| EQUIP. NO. | | TYPE OF EQUIPMENT | HOURS | RATE | AMOUNT |
|---|---|---|---|---|---|
| 1 | | Manitowoc Crawler Crane 100T | 10.0 | $ 585.22 | $ 5,852.20 |
| 2 | TKP299 | F-150 Pickup Truck | 10.0 | $ 45.36 | $ 453.60 |
| 3 | BHC1899 | Excavator | 10.0 | $ 117.14 | $ 1,171.40 |
| 4 | LOW103 | Front End Loader | 10.0 | $ 76.58 | $ 765.80 |
| 5 | | PVE Vibro VM Hammer | 10.0 | $ 207.89 | $ 2,078.90 |
| 6 | | Lincoln Welder | 10.0 | $ 11.43 | $ 114.30 |
| 7 | | | | | $ - |
| 8 | | | | | $ - |
| 9 | | | | | $ - |
| | | | EQUIPMENT SUBTOTAL | | $ 10,436.20 |
| | | | JBCCI MU 15.0% | | $ 1,565.43 |
| | | | EQUIPMENT TOTAL | | $ 12,001.63 |

## MATERIALS

| | DESCRIPTION | QUANTITY | UNIT | PRICE | AMOUNT |
|---|---|---|---|---|---|
| 1 | | | | | $ - |
| | | | MATERIALS SUBTOTAL | | $ - |
| | | | Sales Tax (7.5%) | | $ - |
| | | | MATERIALS Mark Up (15.0%) | | $ - |
| | | | MATERIALS TOTAL | | $ - |

## SUBCONTRACTORS

| | DESCRIPTION | QUANTITY | UNIT | PRICE | AMOUNT |
|---|---|---|---|---|---|
| 1 | | | | | $ - |
| | | | SUBCONTRACTS SUBTOTAL | | $ - |
| | | | SUBCONTRACTS MU (10%) | | $ - |
| | | | SUBCONTRACTS TOTAL | | $ - |

DESCRIPTION OF WORK: Installation of Tie Back System in Section 4

| | | |
|---|---|---|
| SUBTOTAL | $ | 15,649.68 |
| 0.53% Bond | $ | 82.94 |
| **GRAND TOTAL** | **$** | **15,732.62** |

Report Submitted by:

Docusign Envelope ID: F54DB230-A150-452A-B3F0-14C4A48C193C

**J. B. COXWELL CONTRACTING, INC.**
6741 Lloyd Road West, Jacksonville, FL 32254-1249
Telephone (904) 786-1120 * Fax (904) 783-2970

**FORCE ACCOUNT**
**DAILY TIME REPORT**

NAME: Carl Padgett GAI Consultants
Date: December 10, 2024

MAILING ADDRESS: 12574 Flagler Center Blvd Suite 202
Our Job No.: 2325

CITY: Jacksonville Fl 32258
Location: Mccoy's Creek Channel Improvements

Section 4 tie back installation

Idle Equipment Rate Charged at 50% Blue Book Value

## LABOR

| EMP. NO | | EMPLOYEE'S NAME | OCCUPATION | HOURS | RATE | AMOUNT |
|---|---|---|---|---|---|---|
| 1 | 5514 | Scott Brunette | Superintendent | 10.0 | $ 60.00 | $ 600.00 |
| 2 | 5385 | Victor Bazile | Foreman | 10.0 | $ 27.00 | $ 270.00 |
| 3 | 5586 | Rasmun White | Pile driver | 10.0 | $ 24.50 | $ 245.00 |
| 4 | 5613 | Christopher Griffin | Carpenter | 10.0 | $ 22.00 | $ 220.00 |
| 5 | 5515 | Caleb Jones | Pile driver | 10.0 | $ 22.00 | $ 220.00 |
| 6 | 5719 | Quantrel Cannon | Welder | 10.0 | $ 24.00 | $ 240.00 |
| 7 | 5798 | Austin Lewis | Operator | 10.0 | $ 40.00 | $ 400.00 |
| 8 | | | | | | $ - |
| 9 | | | | | | $ - |
| 10 | | | | | | $ - |
| 11 | | | | | | $ - |
| | | | | SUBTOTAL | | $ 2,195.00 |
| | | | | BURDEN (44.52%) | | $ 977.21 |
| | | | | JBCCI MU 15.0% | | $ 475.83 |
| | | | | LABOR TOTAL | | $ 3,648.05 |

## EQUIPMENT

| EQUIP. NO | | TYPE OF EQUIPMENT | HOURS | RATE | AMOUNT |
|---|---|---|---|---|---|
| 1 | | Manitowoc Crawler Crane 1997 | 10.0 | $ 585.22 | $ 5,852.20 |
| 2 | TKP299 | F-150 Pickup Truck | 10.0 | $ 45.36 | $ 453.60 |
| 3 | BHC1899 | Excavator | 10.0 | $ 117.14 | $ 1,171.40 |
| 4 | LOW103 | Front End Loader | 10.0 | $ 76.58 | $ 765.80 |
| 5 | | PVE Vibro VM Hammer | 10.0 | $ 207.89 | $ 2,078.90 |
| 6. | | Citizen Welder | 10.0 | $ 11.43 | $ 114.30 |
| 7 | | | | | $ - |
| 8 | | | | | $ - |
| 9 | | | | | $ - |
| | | | EQUIPMENT SUBTOTAL | | $ 10,436.20 |
| | | | JBCCI MU 15.0% | | $ 1,565.43 |
| | | | EQUIPMENT TOTAL | | $ 12,001.63 |

## MATERIALS

| | DESCRIPTION | QUANTITY | UNIT | PRICE | AMOUNT |
|---|---|---|---|---|---|
| 1 | | | | | $ - |
| | | | MATERIALS SUBTOTAL | | $ - |
| | | | Sales Tax (7.5%) | | $ - |
| | | | MATERIALS Mark Up (15.0%) | | $ - |
| | | | MATERIALS TOTAL | | $ - |

## SUBCONTRACTORS

| | DESCRIPTION | QUANTITY | UNIT | PRICE | AMOUNT |
|---|---|---|---|---|---|
| 1 | | | | | $ |
| | | | SUBCONTRACTS SUBTOTAL | | $ - |
| | | | SUBCONTRACTS MU (10%) | | $ - |
| | | | SUBCONTRACTS TOTAL | | $ - |

DESCRIPTION OF WORK: Installation of Tie Back System in Section 4

| | | |
|---|---|---|
| SUBTOTAL | $ | 15,649.68 |
| 0.53% Bond | $ | 82.94 |
| **GRAND TOTAL** | **$** | **15,732.62** |

Report Submitted by: _____

Docusign Envelope ID: F54DB230-A150-452A-B3F0-14C4A48C193C

J.B. Coxwell
Attn.: Garrett Harrison
Ref.: McCoys – Section 4 Redesign

**JD Fields is pleased to offer the following materials from – Stock, subject to prior sale**

## AZ 20-800 Doubles (Hot rolled) to A 572 60

25.5 @ 7-8' cut from stock lengths
Total Lbs = 23,889.25
**Price = $90.00/Cwt** **Total Price = $21,500.33 – Delivered**

2 @ 38'
Total Lbs = 9,044
**Price = $90.00/Cwt** **Total Price = $8,139.60 – Delivered**

## C 10 x 30 Double Channel Waler - Galvanized

275 Ft in 4 sections
**Price = $175.50/FT** **Total Price = $42,625.00**

- **Includes: Steel channels cut to length, spacer tubes (Galv), Bolts (assembly, splice and attach – Galv), Plates (assembly and attach Galv) , Splice plates plain finish, hole placement, assembly and delivery -**

## Tie Rods

| | | | |
|---|---|---|---|
| **1-3/4" Grade 150 bar – Galvanized** | **36 Pcs @ 25'** | **$521.95/Ea** | **=$18,790.20** |
| **1-3/4" Grade 150 bar – Galvanized** | **14 Pcs @ 10'** | **$212.45/Ea** | **=$2,974.30** |
| **Coupler – Galv** | **36 Pcs** | **$45.50/Ea** | **=$1,638.00** |
| **Bev Washer – Galv** | **28 Pcs** | **$23.05/Ea** | **=$645.40** |
| **Hex Nut – Galv** | **28 Pcs** | **$22.25/Ea** | **=$623.00** |
| **Flat Washer – Galv** | **28 Pcs** | **$7.75/Ea** | **=$217.00** |
| **10x10x1.25" plate - Galv** | **14 Pcs** | **$83.85/Ea** | **=$1,173.90** |
| **8x14x1.25" plate - Galv** | **14 Pcs** | **$92.95/Ea** | **=$1,301.30** |
| **8x8x1.25" plate - Galv** | **14 Pcs** | **$54.85/Ea** | **=$767.90** |
| **Freight for Tie Rods** | | | **=$1,650.00** |

**** Final quantities and lengths are the responsibility of the contractor ****

Docusign Envelope ID: F54DB230-A150-452A-B3F0-14C4A48C193C

# CITY OF JACKSONVILLE
# CONTRACTOR'S DAILY REPORT

**CONTRACTOR:** J.B. Coxwell Inc. **Date:** 11-12-24

Superintendent: Scott Brunette Weather:

Job Site: McCoy's Creek #2325 *Temp: A.M.* 68 * P.M. *83

Job Safety: Hard hats,vest,,glasses

| | |
|---|---|
| **Supr.** | 1 |
| **Foreman** | 1 |
| **Carpenter** | 11 |
| **Finisher** | |
| **Welder** | 2 |
| **Pile Driver** | 1 |
| ***Laborer*** | |
| **OP. Crane** | 2 |
| ***Survey*** | |
| **Rod Busters** | |

Deficiencies/Delays

Comments:

Work In Progress:

Poured cap on left wall on section 1

Formed cap on left wall in section 1

Installed Whalers in section 4 on left wall

Dig out for tie backs in section 4 on left wall

Inspector Comments:

Scott Brunette

**CONTRACTOR** **INSPECTOR**

Docusign Envelope ID: F54DB230-A150-452A-B3F0-14C4A48C193C

# CITY OF JACKSONVILLE
# CONTRACTOR'S DAILY REPORT

**CONTRACTOR:** J.B. Coxwell Inc. **Date:** 11-13-24

Superintendent: Scott Brunette Weather:

Job Site: McCoy's Creek #2325 *Temp: A.M.* 69 * P.M. *78

Job Safety: Hard hats,vest,,glasses

| | |
|---|---|
| **Supr.** | 1 |
| **Foreman** | 1 |
| **Carpenter** | 11 |
| **Finisher** | |
| **Welder** | 2 |
| **Pile Driver** | |
| ***Laborer*** | 1 |
| **OP. Crane** | 2 |
| ***Survey*** | |
| **Rod Busters** | |

Deficiencies/Delays

Comments:

Work In Progress:

Formed cap on left wall in section 1

Installed whaler on tie back anchor wall in section 4

Inspector Comments:

Scott Brunette

**CONTRACTOR** **INSPECTOR**

Docusign Envelope ID: F54DB230-A150-452A-B3F0-14C4A48C193C

# CITY OF JACKSONVILLE
# CONTRACTOR'S DAILY REPORT

**CONTRACTOR:** J.B. Coxwell Inc. **Date:** 11-14-24

Superintendent: Scott Brunette Weather:

Job Site: McCoy's Creek #2325 *Temp: A.M.* 65 * P.M. *81

Job Safety: Hard hats,vest,,glasses

| | |
|---|---|
| **Supr.** | 1 |
| **Foreman** | 1 |
| **Carpenter** | 11 |
| **Finisher** | |
| **Welder** | 2 |
| **Pile Driver** | 1 |
| ***Laborer*** | 1 |
| **OP. Crane** | 2 |
| ***Survey*** | |
| **Rod Busters** | |

Deficiencies/Delays Scheduled Bryan to come out today to give us grade for section 1 cap and as built pipe pile in section 4 for permanent bridge. He came and gave us grades for the cap then left with out saying anything to me and didnt do as built pile for bridge. Bryan told Payan that Jared called him off this job to go to another job before he finished here

Comments:

Work In Progress:

Poured cap on left wall in section 1

Formed left wall cap in section 1

Installed tie back anchors in section 4 on left wall

Inspector Comments:

Scott Brunette

**CONTRACTOR** **INSPECTOR**

Docusign Envelope ID: F54DB230-A150-452A-B3F0-14C4A48C193C

# CITY OF JACKSONVILLE
# CONTRACTOR'S DAILY REPORT

**CONTRACTOR:** J.B. Coxwell Inc. **Date:** 12-2-24

Superintendent: Scott Brunette Weather:

Job Site: McCoy's Creek #2325 *Temp: A.M.* * P.M. *

Job Safety: Hard hats,vest,,glasses

| | |
|---|---|
| **Supr.** | 1 |
| **Foreman** | 2 |
| **Carpenter** | 12 |
| **Finisher** | |
| **Welder** | 2 |
| **Pile Driver** | 1 |
| ***Laborer*** | 1 |
| **OP. Crane** | 3 |
| ***Survey*** | |
| **Rod Busters** | |

Deficiencies/Delays

Comments:

Work In Progress:

Formed section 2 wall at section 1

Formed section 2 wall at sta. 105+76 to 106+10

Installed tie back wall in section 4 on right wall. had to remove debris where wall goes

Inspector Comments:

Scott Brunette

**CONTRACTOR** **INSPECTOR**

Docusign Envelope ID: F54DB230-A150-452A-B3F0-14C4A48C193C

# CITY OF JACKSONVILLE
# CONTRACTOR'S DAILY REPORT

**CONTRACTOR:** J.B. Coxwell Inc. **Date:** 12-3-24

Superintendent: Scott Brunette Weather:

Job Site: McCoy's Creek #2325 *Temp: A.M.* 32 * P.M. *57

Job Safety: Hard hats,vest,,glasses

| | |
|---|---|
| **Supr.** | 1 |
| **Foreman** | 2 |
| **Carpenter** | 12 |
| **Finisher** | |
| **Welder** | 2 |
| **Pile Driver** | 1 |
| ***Laborer*** | 1 |
| **OP. Crane** | 3 |
| ***Survey*** | |
| **Rod Busters** | |

Deficiencies/Delays

Comments:

Work In Progress:

Formed left wall in section 2

Installed tie back wall in section 4

Inspector Comments:

Scott Brunette

**CONTRACTOR** **INSPECTOR**

Docusign Envelope ID: F54DB230-A150-452A-B3F0-14C4A48C193C

# CITY OF JACKSONVILLE
# CONTRACTOR'S DAILY REPORT

**CONTRACTOR:** J.B. Coxwell Inc. **Date:** 12-4-24

Superintendent: Scott Brunette Weather:

Job Site: McCoy's Creek #2325 *Temp: A.M.* 32 * P.M. *60

Job Safety: Hard hats,vest,,glasses

| | |
|---|---|
| **Supr.** | 1 |
| **Foreman** | 2 |
| **Carpenter** | 12 |
| **Finisher** | |
| **Welder** | 2 |
| **Pile Driver** | 1 |
| ***Laborer*** | 1 |
| **OP. Crane** | 3 |
| ***Survey*** | |
| **Rod Busters** | |

Deficiencies/Delays

Comments:

Work In Progress:

Formed left wall in section 2.

Installed sheets for tie backs in section 4 and dug out dirt for tie backs rods in 2 spots

Inspector Comments:

Scott Brunette

**CONTRACTOR** **INSPECTOR**

Docusign Envelope ID: F54DB230-A150-452A-B3F0-14C4A48C193C

# CITY OF JACKSONVILLE
# CONTRACTOR'S DAILY REPORT

**CONTRACTOR:** J.B. Coxwell Inc. **Date:** 12-5-24

Superintendent: Scott Brunette Weather:

Job Site: McCoy's Creek #2325 *Temp: A.M.* 38* P.M. *72

Job Safety: Hard hats,vest,,glasses

| | |
|---|---|
| **Supr.** | 1 |
| **Foreman** | 2 |
| **Carpenter** | 12 |
| **Finisher** | |
| **Welder** | 2 |
| **Pile Driver** | 1 |
| ***Laborer*** | 1 |
| **OP. Crane** | 3 |
| ***Survey*** | |
| **Rod Busters** | |

Deficiencies/Delays

Comments:

Work In Progress:

Formed left cap and wall in section 2

Installed tie back rods in section 4 on right wall

Inspector Comments:

Scott Brunette

**CONTRACTOR** **INSPECTOR**

Docusign Envelope ID: F54DB230-A150-452A-B3F0-14C4A48C193C

# CITY OF JACKSONVILLE
# CONTRACTOR'S DAILY REPORT

**CONTRACTOR:** J.B. Coxwell Inc. **Date:** 12-6-24

Superintendent: Scott Brunette Weather:

Job Site: McCoy's Creek #2325 *Temp: A.M.* 36* P.M. *59

Job Safety: Hard hats,vest,,glasses

| | |
|---|---|
| **Supr.** | 1 |
| **Foreman** | 2 |
| **Carpenter** | 12 |
| **Finisher** | |
| **Welder** | 2 |
| **Pile Driver** | 1 |
| ***Laborer*** | 1 |
| **OP. Crane** | 3 |
| ***Survey*** | |
| **Rod Busters** | |

Deficiencies/Delays

Comments:

Work In Progress:

Poured left cap and wall in section 2

Installed tie back sheets in section 4on right wall

Inspector Comments:

Scott Brunette

**CONTRACTOR** **INSPECTOR**

Docusign Envelope ID: F54DB230-A150-452A-B3F0-14C4A48C193C

# CITY OF JACKSONVILLE
# CONTRACTOR'S DAILY REPORT

**CONTRACTOR:** J.B. Coxwell Inc. **Date:** 12-7-24

Superintendent: Scott Brunette Weather:

Job Site: McCoy's Creek #2325 *Temp: A.M.* 31* P.M. * 60

Job Safety: Hard hats,vest,,glasses

| | |
|---|---|
| **Supr.** | 1 |
| **Foreman** | 2 |
| **Carpenter** | 12 |
| **Finisher** | |
| **Welder** | 2 |
| **Pile Driver** | 1 |
| ***Laborer*** | 1 |
| **OP. Crane** | 3 |
| ***Survey*** | |
| **Rod Busters** | |

Deficiencies/Delays

Comments:

Work In Progress:

Formed right wall in section 2

Installed sheets in section 4 for tie backs on right wall

Inspector Comments:

Scott Brunette

**CONTRACTOR** **INSPECTOR**

Docusign Envelope ID: F54DB230-A150-452A-B3F0-14C4A48C193C

# CITY OF JACKSONVILLE
# CONTRACTOR'S DAILY REPORT

**CONTRACTOR:** J.B. Coxwell Inc. **Date:** 12-9-24

Superintendent: Scott Brunette Weather:

Job Site: McCoy's Creek #2325 *Temp: A.M.* 50* P.M. *73

Job Safety: Hard hats,vest,,glasses

| | |
|---|---|
| **Supr.** | 1 |
| **Foreman** | 2 |
| **Carpenter** | 12 |
| **Finisher** | |
| **Welder** | 1 |
| **Pile Driver** | 1 |
| ***Laborer*** | 1 |
| **OP. Crane** | 3 |
| ***Survey*** | |
| **Rod Busters** | |

Deficiencies/Delays

Comments:

Work In Progress:

Stripped forms on left wall in section 2

Formed right wall in section 2.stood forms to shoot grade

Installed tie backs on right wall . while digging out we found an old oil drum about 500 gals. called to have it pumped out tomorrow.

Inspector Comments:

Scott Brunette

**CONTRACTOR** **INSPECTOR**

Docusign Envelope ID: F54DB230-A150-452A-B3F0-14C4A48C193C

# CITY OF JACKSONVILLE
# CONTRACTOR'S DAILY REPORT

**CONTRACTOR:** J.B. Coxwell Inc. **Date:** 12-10-24

Superintendent: Scott Brunette Weather:

Job Site: McCoy's Creek #2325 *Temp: A.M.* 59 * P.M. *77

Job Safety: Hard hats,vest,,glasses

| | |
|---|---|
| **Supr.** | 1 |
| **Foreman** | 2 |
| **Carpenter** | 12 |
| **Finisher** | |
| **Welder** | 2 |
| **Pile Driver** | 1 |
| ***Laborer*** | 1 |
| **OP. Crane** | 3 |
| ***Survey*** | |
| **Rod Busters** | |

Deficiencies/Delays

Comments:

Work In Progress:

Formed right wall in section 2

Installed tie back rods in section 4 on right wall

Formed left wall in section 2

Inspector Comments:

Scott Brunette

**CONTRACTOR** **INSPECTOR**

Docusign Envelope ID: F54DB230-A150-452A-B3F0-14C4A48C193C

EquipmentWatch.

www.equipmentwatch.com

All prices shown in US Dollars ($)

## Adjustments for Crawler Crane Lattice Boom in JBC Fleet

January 24, 2024

**Manitowoc 10000**
Crawler Mounted Lattice Boom Cranes

Size Class:
**80.5 - 107.4 mt**
Weight:
**124390 lbs**

### Configuration for 10000

| | | | |
|---|---|---|---|
| Boom Base Length | 40.0 ft | Maximum Lift Capacity | 90.7 mt |
| Power Mode | Diesel | | |

### Blue Book Rates

** FHWA Rate is equal to the monthly ownership cost divided by 176 plus the hourly estimated operating cost.

| | Ownership Costs | | | | Estimated Operating Costs | FHWA Rate** |
|---|---|---|---|---|---|---|
| | Monthly | Weekly | Daily | Hourly | Hourly | Hourly |
| Published Rates | USD $69,610.00 | USD $19,490.00 | USD $4,875.00 | USD $730.00 | USD $168.52 | USD $584.03 |
| **Adjustments** | | | | | | |
| Region ( Jacksonville, Florida: 102.3%) | USD $206.83 | USD $58.47 | USD $14.63 | USD $2.19 | | |
| Model Year (2024: 100%) | - | - | - | - | | |
| Adjusted Hourly Ownership Cost (100%) | - | - | - | - | | |
| Hourly Operating Cost (100%) | | | | | - | |
| **Total:** | **USD $69,816.83** | **USD $19,548.47** | **USD $4,889.63** | **USD $732.19** | **USD $168.52** | **USD $585.22** |

### Non-Active Use Rates

| | Hourly |
|---|---|
| Standby Rate | USD $249.92 |
| Idling Rate | USD $439.93 |

### Rate Element Allocation

| Element | Percentage | Value |
|---|---|---|
| Depreciation (ownership) | 32% | USD $22,275.20/mo |
| Overhaul (ownership) | 37% | USD $25,755.70/mo |
| CFC (ownership) | 16% | USD $11,237.60/mo |
| Indirect (ownership) | 15% | USD $10,441.50/mo |
| Fuel (operating) @ USD 4.15 | 22.93% | USD $43.23/hr |

Revised Date: 1st quarter 2024

These are the most accurate rates for the selected Revision Date(s). However, due to more frequent online updates, these rates may not match Rental Rate Blue Book® Print. Visit the Cost Recovery Product Guide on our Help page for more information.

The equipment represented in this report has been exclusively prepared for TRACY KALVIG (mattd@jbcoxwell.com)

All material herein © 2003-2024 Randall-Reilly All rights reserved.

Docusign Envelope ID: F54DB230-A150-452A-B3F0-14C4A48C193C

EquipmentWatch.

www.equipmentwatch.com

All prices shown in US Dollars ($)

## Rental Rate Blue Book®

January 24, 2024

**Ford F-150 XLT 4X4 GAS**
Light Duty Trucks

Size Class:
2
Weight:
MA

### Configuration for F-150 XLT 4X4 GAS

| | | | |
|---|---|---|---|
| Power Mode | Gasoline | Wheelbase | 122.8 Inches |
| Model Trim | XLT | Gross Vehicle Weight Rating | 6350 Pounds |

### Blue Book Rates

** FHWA Rate is equal to the monthly ownership cost divided by 176 plus the hourly estimated operating cost.

| | Ownership Costs | | | | Estimated Operating Costs | FHWA Rate** |
|---|---|---|---|---|---|---|
| | Monthly | Weekly | Daily | Hourly | Hourly | Hourly |
| Published Rates | USD $3,135.00 | USD $660.00 | USD $220.00 | USD $33.00 | USD $27.77 | USD $45.58 |
| **Adjustments** | | | | | | |
| Region ( Jacksonville, Florida: 99.5%) | (USD $15.68) | (USD $4.40) | (USD $1.10) | (USD $0.17) | | |
| Model Year (2023: 99.24%) | (USD $23.76) | (USD $6.67) | (USD $1.67) | (USD $0.25) | | |
| Adjusted Hourly Ownership Cost (100%) | - | - | - | - | | |
| Hourly Operating Cost (100%) | | | | | - | |
| **Total:** | **USD $3,095.56** | **USD $668.93** | **USD $217.23** | **USD $32.58** | **USD $27.77** | **USD $45.36** |

### Non-Active Use Rates

| | Hourly |
|---|---|
| Standby Rate | USD $9.85 |
| Idling Rate | USD $34.94 |

### Rate Element Allocation

| Element | Percentage | Value |
|---|---|---|
| Depreciation (ownership) | 23% | USD $721.05/mo |
| Overhaul (ownership) | 44% | USD $1,379.40/mo |
| CFC (ownership) | 16% | USD $500.60/mo |
| Indirect (ownership) | 17% | USD $532.95/mo |
| Fuel (operating) @ USD 3.24 | 62.48% | USD $17.35/hr |

Revised Date: 1st quarter 2024

These are the most accurate rates for the selected Revision Date(s). However, due to more frequent online updates, these rates may not match Rental Rate Blue Book® Print. Visit the Cost Recovery Product Guide on our Help page for more information.

The equipment represented in this report has been exclusively prepared for TRACY KALVIG (mattd@jbcoxwell.com)

All material herein © 2003-2024 Randall-Reilly All rights reserved.

Docusign Envelope ID: F54DB230-A150-452A-B3F0-14C4A48C193C

EquipmentWatch.

www.equipmentwatch.com

# Rental Rate Blue Book®, O&O Rates Report for CAT 938K in JBC Fleet

January 15, 2025

**Caterpillar 938K (disc. 2015)**
4-Wd Articulated Wheel Loaders

Size Class:
**150 - 174 hp**
Weight:
**35104 lbs**

## Configuration for 938K (disc. 2015)

| | | | |
|---|---|---|---|
| Horsepower | **173.0 hp** | Operator Protection | **ROPS/FOPS** |
| Power Mode | **Diesel** | | |

## Blue Book Rates

** FHWA Rate is equal to the monthly ownership cost divided by 176 plus the hourly estimated operating cost.

| | Ownership Costs | | | | Estimated Operating Costs | FHWA Rate** |
|---|---|---|---|---|---|---|
| | **Monthly** | **Weekly** | **Daily** | **Hourly** | **Hourly** | **Hourly** |
| Published Rates | USD $7,680.00 | USD $2,150.00 | USD $540.00 | USD $81.00 | USD $33.03 | USD $76.67 |
| **Adjustments** | | | | | | |
| Region ( Jacksonville, Florida: 99.8%) | (USD $15.36) | (USD $4.30) | (USD $1.08) | (USD $0.16) | | |
| Model Year (2015: 100%) | - | - | - | - | | |
| Adjusted Hourly Ownership Cost (100%) | - | - | - | - | | |
| Hourly Operating Cost (100%) | | | | | - | |
| **Total:** | **USD $7,664.64** | **USD $2,145.70** | **USD $538.92** | **USD $80.84** | **USD $33.03** | **USD $76.58** |

## Non-Active Use Rates

| | **Hourly** |
|---|---|
| Standby Rate | USD $29.19 |
| Idling Rate | USD $52.32 |

## Rate Element Allocation

| **Element** | **Percentage** | **Value** |
|---|---|---|
| Depreciation (ownership) | 39.2% | USD $3,010.65/mo |
| Overhaul (ownership) | 32.97% | USD $2,532.12/mo |
| CFC (ownership) | 17.62% | USD $1,353.20/mo |
| Indirect (ownership) | 10.21% | USD $784.03/mo |
| Fuel (operating) @ USD 3.54 | 26.55% | USD $8.77/hr |

Revised Date: 1st quarter 2025

www.equipmentwatch.com

All material herein © 2003-2025 Randall-Reilly All rights reserved.

Docusign Envelope ID: F54DB230-A150-452A-B3F0-14C4A48C193C

EquipmentWatch.

www.equipmentwatch.com

# Rental Rate Blue Book®, O&O Rates Report for CAT 336E L in JBC Fleet

January 15, 2025

**Caterpillar 336E L (disc. 2017)**
Crawler Mounted Hydraulic Excavators

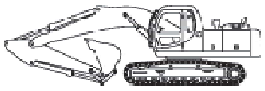

Size Class:
**33.5 - 40.4 mt**
Weight:
**80620 lbs**

## Configuration for 336E L (disc. 2017)

| | | | |
|---|---|---|---|
| Horsepower | **291.0 hp** | Operating Weight | **36.6 mt** |
| Power Mode | **Diesel** | | |

## Blue Book Rates

** FHWA Rate is equal to the monthly ownership cost divided by 176 plus the hourly estimated operating cost.

| | Ownership Costs | | | | Estimated Operating Costs | FHWA Rate** |
|---|---|---|---|---|---|---|
| | **Monthly** | **Weekly** | **Daily** | **Hourly** | **Hourly** | **Hourly** |
| Published Rates | USD $11,915.00 | USD $3,335.00 | USD $835.00 | USD $125.00 | USD $50.12 | USD $117.82 |
| **Adjustments** | | | | | | |
| Region ( Jacksonville, Florida: 99%) | (USD $119.15) | (USD $33.35) | (USD $8.35) | (USD $1.25) | | |
| Model Year (2017: 100%) | - | - | - | - | | |
| Adjusted Hourly Ownership Cost (100%) | - | - | - | - | | |
| Hourly Operating Cost (100%) | | | | | - | |
| **Total:** | **USD $11,795.85** | **USD $3,301.65** | **USD $826.65** | **USD $123.75** | **USD $50.12** | **USD $117.14** |

## Non-Active Use Rates

| | **Hourly** |
|---|---|
| Standby Rate | USD $39.00 |
| Idling Rate | USD $86.59 |

## Rate Element Allocation

| **Element** | **Percentage** | **Value** |
|---|---|---|
| Depreciation (ownership) | 31.38% | USD $3,738.64/mo |
| Overhaul (ownership) | 41.81% | USD $4,981.39/mo |
| CFC (ownership) | 16.89% | USD $2,012.13/mo |
| Indirect (ownership) | 9.93% | USD $1,182.84/mo |
| Fuel (operating) @ USD 3.54 | 39.05% | USD $19.57/hr |

Revised Date: 1st quarter 2025

www.equipmentwatch.com

All material herein © 2003-2025 Randall-Reilly All rights reserved.

Docusign Envelope ID: F54DB230-A150-452A-B3F0-14C4A48C193C

EquipmentWatch.

www.equipmentwatch.com

All prices shown in US Dollars ($)

## Adjustments for Vibratory Hammer in JBC Fleet

January 24, 2024

**ICE 66-65 (disc. 2009)**
Vibratory Hammers/Extractors

**Size Class:**
**150 - 199 ts**
**Weight:**
**17400 lbs**

### Configuration for 66-65 (disc. 2009)

| Horsepower | 650.0 | Power Mode | Diesel |
|---|---|---|---|

### Blue Book Rates

** FHWA Rate is equal to the monthly ownership cost divided by 176 plus the hourly estimated operating cost.

| | Ownership Costs | | | | Estimated Operating Costs | FHWA Rate** |
|---|---|---|---|---|---|---|
| | Monthly | Weekly | Daily | Hourly | Hourly | Hourly |
| Published Rates | USD $14,333.00 | USD $4,005.00 | USD $1,000.00 | USD $150.00 | USD $126.75 | USD $206.08 |
| **Adjustments** | | | | | | |
| Region ( Jacksonville, Florida: 99.8%) | (USD $28.62) | (USD $8.01) | (USD $2.00) | (USD $0.30) | | |
| Model Year (2009: 100%) | - | - | - | - | | |
| Adjusted Hourly Ownership Cost (100%) | - | - | - | - | | |
| Hourly Operating Cost (100%) | | | | | | |
| **Total:** | **USD $14,281.38** | **USD $3,996.99** | **USD $998.00** | **USD $149.70** | **USD $126.75** | **USD $207.88** |

### Non-Active Use Rates

| | Hourly |
|---|---|
| Standby Rate | USD $58.42 |
| Idling Rate | USD $175.73 |

### Rate Element Allocation

| Element | Percentage | Value |
|---|---|---|
| Depreciation (ownership) | 48% | USD $6,868.80/mo |
| Overhaul (ownership) | 28% | USD $4,006.80/mo |
| CFC (ownership) | 13% | USD $1,860.30/mo |
| Indirect (ownership) | 11% | USD $1,574.10/mo |
| Fuel (operating) @ USD 4.15 | 74.63% | USD $94.59/hr |

Revised Date: 1st quarter 2024

These are the most accurate rates for the selected Revision Date(s). However, due to more frequent online updates, these rates may not match Rental Rate Blue Book® Print. Visit the Cost Recovery Product Guide on our Help page for more information.

The equipment represented in this report has been exclusively prepared for TRACY KALVIG (mattd@jbcoxwell.com)

All material herein © 2003-2024 Randall-Reilly All rights reserved.

Docusign Envelope ID: F54DB230-A150-452A-B3F0-14C4A48C193C

EquipmentWatch.

www.equipmentwatch.com

All prices shown in US Dollars ($)

## Adjustments for Lincoln 500 Welding Machine in JBC Fleet

January 24, 2024

**Lincoln VANTAGE 500 (disc. 2014)**
Portable Welders

Size Class:
**485 - 500 A**
Weight:
**N/A**

### Configuration for VANTAGE 500 (disc. 2014)

| | | | |
|---|---|---|---|
| Amps | 500 | Current | DC |
| Horsepower | 45 hp | Mounting | Skid |
| Power Mode | Diesel | | |

### Blue Book Rates

** FHWA Rate is equal to the monthly ownership cost divided by 176 plus the hourly estimated operating cost.

| | Ownership Costs | | | | Estimated Operating Costs | FHWA Rate** |
|---|---|---|---|---|---|---|
| | Monthly | Weekly | Daily | Hourly | Hourly | Hourly |
| Published Rates | USD $310.00 | USD $87.00 | USD $22.00 | USD $3.00 | USD $9.65 | USD $11.41 |
| **Adjustments** | | | | | | |
| Region ( Jacksonville, Florida: 101.3%) | USD $4.03 | USD $1.13 | USD $0.29 | USD $0.04 | | |
| Model Year (2014: 100%) | - | - | - | - | | |
| Adjusted Hourly Ownership Cost (100%) | - | - | - | - | | |
| Hourly Operating Cost (100%) | | | | | - | |
| **Total:** | **USD $314.03** | **USD $88.13** | **USD $22.29** | **USD $3.04** | **USD $9.65** | **USD $11.41** |

### Non-Active Use Rates

| | Hourly |
|---|---|
| Standby Rate | USD $1.41 |
| Idling Rate | USD $9.49 |

### Rate Element Allocation

| Element | Percentage | Value |
|---|---|---|
| Depreciation (ownership) | 40% | USD $124.00/mo |
| Overhaul (ownership) | 21% | USD $65.10/mo |
| CFC (ownership) | 20% | USD $62.00/mo |
| Indirect (ownership) | 19% | USD $58.90/mo |
| Fuel (operating) @ USD 4.15 | 79.9% | USD $7.71/hr |

Revised Date: 1st quarter 2024

These are the most accurate rates for the selected Revision Date(s). However, due to more frequent online updates, these rates may not match Rental Rate Blue Book® Print. Visit the Cost Recovery Product Guide on our Help page for more information.

The equipment represented in this report has been exclusively prepared for TRACY KALVIG (mattd@jbcoxwell.com)

All material herein © 2003-2024 Randall-Reilly All rights reserved.

Docusign Envelope ID: F54DB230-A150-452A-B3F0-14C4A48C193C

McCoy's Creek Channel Improvements
Section 4 Tieback System